This is a digital copy of a book that was preserved for generations on library shelves before it was carefully scanned by Google as part of a project to make the world's books discoverable online.

It has survived long enough for the copyright to expire and the book to enter the public domain. A public domain book is one that was never subject to copyright or whose legal copyright term has expired. Whether a book is in the public domain may vary country to country. Public domain books are our gateways to the past, representing a wealth of history, culture and knowledge that's often difficult to discover.

Marks, notations and other marginalia present in the original volume will appear in this file - a reminder of this book's long journey from the publisher to a library and finally to you.

Usage guidelines

Google is proud to partner with libraries to digitize public domain materials and make them widely accessible. Public domain books belong to the public and we are merely their custodians. Nevertheless, this work is expensive, so in order to keep providing this resource, we have taken steps to prevent abuse by commercial parties, including placing technical restrictions on automated querying.

We also ask that you:

+ *Make non-commercial use of the files* We designed Google Book Search for use by individuals, and we request that you use these files for personal, non-commercial purposes.
+ *Refrain from automated querying* Do not send automated queries of any sort to Google's system: If you are conducting research on machine translation, optical character recognition or other areas where access to a large amount of text is helpful, please contact us. We encourage the use of public domain materials for these purposes and may be able to help.
+ *Maintain attribution* The Google "watermark" you see on each file is essential for informing people about this project and helping them find additional materials through Google Book Search. Please do not remove it.
+ *Keep it legal* Whatever your use, remember that you are responsible for ensuring that what you are doing is legal. Do not assume that just because we believe a book is in the public domain for users in the United States, that the work is also in the public domain for users in other countries. Whether a book is still in copyright varies from country to country, and we can't offer guidance on whether any specific use of any specific book is allowed. Please do not assume that a book's appearance in Google Book Search means it can be used in any manner anywhere in the world. Copyright infringement liability can be quite severe.

About Google Book Search

Google's mission is to organize the world's information and to make it universally accessible and useful. Google Book Search helps readers discover the world's books while helping authors and publishers reach new audiences. You can search through the full text of this book on the web at `http://books.google.com/`

War
6458
88.3

HARVARD COLLEGE
LIBRARY

THE GIFT OF

KENNETH BALLARD MURDOCK
CLASS OF 1916

PROFESSOR OF ENGLISH

Lieut. J. B. Murdock.

With the Compliments of

R. P. Rodgers

OFFICE OF NAVAL INTELLIGENCE,

GENERAL INFORMATION SERIES, No. VII.

INFORMATION FROM ABROAD.

NAVAL RESERVES, TRAINING, AND MATÉRIEL.

JUNE 1888.

NAVY DEPARTMENT,
BUREAU OF NAVIGATION,
OFFICE OF NAVAL INTELLIGENCE,
1888.

WASHINGTON:
GOVERNMENT PRINTING OFFICE.
1888.

War 6458.88.3

HARVARD COLLEGE LIBRARY
GIFT OF
PROF. KENNETH B MURDOCK
Nov 15, 1934

TABLE OF CONTENTS.

	Page.
Introductory note	5
I. Naval Reserves and Coast Defense	7
II. Naval Training and the Changes induced by Recent Progress in the Implements of Naval Warfare	47
III. Target Practice Afloat	90
IV. Naval Manœuvres, 1887	122
V. Electricity on Shipboard	179
VI. Marine Boilers	222
VII. The preservation of Iron Ships' Bottoms	263
VIII. Transportation of Torpedo-Boats by Railway	288
Notes on ships, machinery, ordnance, armor and projectiles, torpedoes, torpedo-boats, and other subjects of professional interest:	
Ships	297
Machinery	326
Ordnance	336
Armor and Armor-piercing Projectiles	380
Torpedoes	391
Torpedo-boats	398
Index	421

INTRODUCTORY.

In the annual publication of the Office of Naval Intelligence for 1888, General Information Series No. VII, it has been the purpose to present; first, a statement of the various existing systems of organization and training of naval reserves in European countries; secondly, the most recent developments in relation to the training of officers and seamen for active service, and to squadron or tactical training; and, thirdly, a discussion of certain mechanical questions of special interest at the present time. The articles on special subjects are supplemented by the usual review of naval progress for the year.

Chapter I describes the methods of enrolling, organizing, and training the naval reserves of Europe. It also includes a brief description of the plan proposed for organizing such a body in the United States, adapted to our particular needs and institutions. The question is one which has of late attracted much attention throughout the country, and it is hoped that this article may be of practical benefit by suggesting the main features of an efficient organization of this most important auxiliary of naval defense.

Chapter II presents a résumé of current opinion and administrative regulations abroad regarding the education and training of naval officers and men. The tendency toward practical investigation and training, and the supplementing of academic study by higher courses of instruction in later years, distinctly indicate the benefit to be gained by maintaining a squadron of evolution upon our coast in connection with the Naval War College.

Chapter III describes the methods of instruction and systems of rewards in great gun target practice at home and abroad.

Chapter IV gives an account of the English, French, and Italian naval manœuvres of 1887. These were various in character, exceedingly comprehensive, and included the mobilization of the most formidable fleets or squadrons that have ever been assembled. The combined manœuvres of the United States North Atlantic Squadron and the garrison of Fort Adams, at Newport, R. I., are briefly described.

The subject of this chapter can not fail to prove of the highest interest to all students of naval warfare.

Chapter V presents a comprehensive review of the application of electricity to various uses on shipboard; its past history, its present

condition, and its future possibilities. It contains much that will be of value to naval officers and to professional electricians.

Chapter VI, on machinery, describes the recent progress made in marine boilers and in forced draft, and contains tabular statements of the results obtained with the different systems of forced draft in use on board naval and mercantile vessels. This chapter includes data of forced-draft experiments, and a description of Fothergill's system, as described at the recent meeting in England of the Institution of Naval Architects.

Chapter VII contains a historical review of the principles applied and the methods employed to preserve the bottoms of iron and steel ships from corrosion and fouling, and indicates the present stage of progress in this most important but as yet comparatively unfruitful field of research and experiment.

Chapter VIII is a general discussion of the transportation of torpedo-boats by railway, with a description of experiments recently made abroad in this direction.

The volume concludes with the annual notes, describing the progress made during the past year in the design, construction, and performance of naval vessels, and in the details of their equipment, armament, and machinery. The notes have been drawn from administrative and parliamentary reports, budgets, professional journals, semi-official publications, and communications from persons engaged in professional or mechanical research.

These articles have been prepared by officers on duty in the Office of Naval Intelligence, with the exception of Chapter V, which was written by Lieut. J. B. Murdock, U. S. Navy, now serving on board the *Omaha.*

R. P. RODGERS,
Lieutenant, U. S. N., Chief Intelligence Officer.

ERRATA.

Page 181, twelfth line from bottom, for "Martin" read "Mather."

Page 195, fifth line, second paragraph, for "bolts" read "beds."

Page 199, fourth line, the letter after the word cover read "d'" instead of "d."

Page 201, seventh line from bottom, read "E" instead of "F."

Page 203, fourth line from bottom, for "Terror" read "Tower."

Page 207, thirteenth line from bottom, for "360 revolutions" read "390 revolutions."

Page 216, eleventh line from bottom, for "projecter" read "projector."

Page 398, sixteenth line from bottom, read "16.75 knots" instead of "16.25."

Page 425, after "High explosive projectiles, Smolianinoff shell," insert "Zalinski shell, 349."

Page 426, for "Martin & Platt" read "Mather & Platt."

Page 427, Men, training of, for "England 67," read "England 8, 67, 90;" and for "Germany 82," read "Germany 21, 82, 104."

Page 428, Promotion by selection, for "England 51," read "England 50."

Page 429, for "Royal naval—continued" read "Royal naval reserves—continued."

Page 431, for "Terror" read "Tower."

I.

NAVAL RESERVES AND COAST DEFENSE.

By Lieut. J. C. Colwell, U. S. N.

In all foreign maritime countries it is a recognized principle that a naval establishment sufficient for peace purposes must be capable of ready expansion into one prepared for war.

With this object in view, systems more or less elaborate in detail have been in operation, in time of peace, to enroll and maintain in a state of efficiency for immediate active service, in war or emergency, a body of trained officers and men presumably sufficient for the national needs.

There consequently exist under the control of their respective navy departments large bodies of naval reserves, whose rôle in many countries is not only to supplement the personnel of the cruising fleet, and of the first defending line, but also to furnish the entire active force for manning the systems of defenses designed for opposing a naval foe.

We, among all the nations, stand alone in making no provision for a personnel large enough to man an efficient war fleet, and in neglecting to provide for the organization and training of the coast-defending force absolutely necessary for the protection of our commercial harbors. The militia laws of the nation provide the Army with a practically unlimited reserve upon which to draw in time of war, and the interest taken by State governments in their local military organizations provides the General Government with a fairly well trained and organized body of troops at all times immediately available for national service on land.

The Navy possesses no reserve force, and upon the Navy would fall the first crushing blow of a maritime war. To its small authorized strength of 8,250 enlisted men and boys of all classes, the Government does not at present possess the ability to add one trained man for service in an emergency on board a ship of war, and untrained men on board modern war-ships in action would be worse than useless.

All preliminary work of organizing and training a body of men to be ready at all times for local or general naval service, and the making of all needful arrangements for calling them into immediate life and action, must be made in time of peace if we desire a stable and efficient force upon which to rely in time of war.

The prevailing practices of foreign nations in establishing forces of naval reserves and definite systems of coast defense are herein given with the object of placing before those interested the latest available information on the subject. The urgent necessity for the adoption by this nation of some similar policy is a matter of national importance which should not be delayed, and much may be learned by the study of foreign methods.

ENGLAND.

Naturally we look first to Great Britain as the leading maritime power of the world, and the one most nearly connected with us by naval tradition and "custom of the service." As far in the past as 1798 we find that country possessed of a naval reserve under the name of Sea Fencibles, recruited from the inhabitants of the maritime counties, whose duty was defined to be "the defense of the Kingdom against invasion." The force was organized and controlled by the Admiralty, and numbered, in 1810, 23,455 men.

In 1847 a force for the defense of the royal dock-yards was established and known officially as the dock-yard battalions. It was composed of the clerks, artisans, and laborers employed in the Government dock-yards throughout the United Kingdom, organized in three corps for training and exercise, the colonel commandant being a naval officer. On first establishment, service in the corps was voluntary, but later it was made compulsory for the classes named. A maximum strength of about 9,000 men was reached, but the force dwindled in strength and efficiency, and after an existence of about twenty years finally disappeared, when the existing volunteer corps began to assume importance.

An act passed in 1853 gave the Admiralty power to raise a naval reserve force not exceeding 10,000 men, to be called Royal Naval Coast Volunteers. They were to receive suitable regular pay and allowances and to be trained and exercised for twenty-eight days in each year. In case of war they were, if required, to serve afloat at a distance not greater than 100 leagues from the coasts of the United Kingdom, but their principal duty was to man the coast and harbor defenses. In 1859 the force numbered 6,869 men of a good class, recruited from persons living on or near the coast, but chiefly from fishermen and boatmen. Upon the establishment of the present system of reserves the corps was allowed to die out. As the result of investigations in 1858–'59 by a special commission, the existing Royal Naval Reserve was established. Until 1870 it was composed exclusively of men who had served in the mercantile marine; but since that time there has existed a second class, composed of men who are engaged in fishing, coasting, and other seafaring pursuits. Still later, a third class, composed of boys of the mercantile training ships, has been allowed; also a class of firemen.

The present authorized strength of the Royal Naval Reserve is 920 officers, comprising 150 lieutenants, 270 sub-lieutenants, 200 midshipmen, 150 engineers and 150 assistant engineers, and 30,000 enlisted

men of all classes on the active list. In addition, there is a non-effective list of honorary officers and pensioned men. The active force actually enrolled at the commencement of the current year was 264 officers and 18,000 men. The average number enrolled during 1887 was 18,361 officers and men of all grades.

The qualifications required of officers to be commissioned and men to be enrolled are excellent, so far as obtaining a superior class of seafaring men on a list presumed to be available for naval service is concerned. Whether the results are satisfactory, as furnishing an effective addition to the armed strength of the Empire, will be treated of further on.

A lieutenant, on first appointment, must not exceed the age of forty years. He must have commanded a first-class steam-ship of not less than 1,500 tons, or a sailing ship of at least 1,000 tons gross, for not less than one year; he must also have been in command within six months of his application, and must declare his intention of following the sea.

A sub-lieutenant must not exceed thirty-five years of age on first appointment. He must have served as first mate on vessels similar to the above for not less than one year, and must possess a master's certificate; he must also have served as master or first mate within six months of his application, and declare his intention of following the sea.

A midshipman must be between the ages of sixteen and eighteen years on appointment; he must have passed through a course of instruction of two years on one of the mercantile training-ships, or, if serving as midshipman or apprentice on any merchant ship, he may be appointed, provided he has served one year at sea on board a first-class ship.

Engineers must not exceed the age of forty years on first appointment. They must hold first or second class certificates, and must have served at sea not less than three years previous to application.

Assistant engineers must not exceed the age of thirty-five years on first appointment. They must hold first or second class certificates, and must have served at sea for not less than one year previous to application.

Naval Reserve men, first class, are enrolled from the mercantile marine, from which none but fully qualified able seamen of excellent character are accepted, care being taken to select only the best men, preferably: (1) men who have fixed residences; (2) men who have employment on regular lines or in certain trades which bring them back at intervals to the same port. The applicant must be able to pass the naval medical examination; he must be under thirty years of age, unless he has been discharged from the navy with a good-conduct discharge, when he may be enrolled up to the age of thirty-five years; he must have had six years' sea service within the preceding ten years, two of which as A. B., and must have been at sea within four months or pass an examination

before two naval officers; he must also declare his intention of following the sea for five years longer.

Naval Reserve men, second class, are recruited from fishermen and others unaccustomed to long voyages or square-riggers. An applicant must be between the ages of nineteen and thirty years; he must have seen three years' service on fishing-vessels, coasters, or foreign-going craft, of which at least six months must have been as ordinary seaman. He must also know the compass, how to steer, heave the lead, and pull a good oar. When duly qualified as to drill, men of this class may be promoted to the first class.

Naval Reserve men, third class, comprise boys between fifteen and sixteen and one-half years of age on the mercantile training-ships who voluntarily enroll. They may be promoted, upon qualifying, to the second and first class.

Firemen must be between twenty and thirty-five years of age on enrollment and must have had six months sea service within the preceding year. They can not re-enroll after forty years of age.

No systematic organization of the force is attempted, officers and men attending the short annual period of drill at such times and places as suit their individual convenience, and with such weapons as may chance to be in the ship or land battery at which they present themselves.

Lieutenants, sub-lieutenants, and midshipmen are required to attend drill with great guns, rifles, pistols, and cutlasses on board one of the harbor drill ships—or, if abroad, on board a vessel of the navy having a gunnery officer—for twenty-eight days each year until reported proficient; after which but seven days' test drill is required. Officers who have obtained a test certificate in gunnery from a drill ship may be permitted to volunteer for temporary duty in the navy for a special cruise or to take a special course in gunnery. Applications are also considered from those who wish to take a course of twelve months' training in the fleet. A number are at present so serving. When embarked they are subject to the same rules and regulations as the regular officers, and in order that they may be associated with officers of corresponding age and experience, sub-lieutenants and midshipmen may be granted acting appointments as lieutenants and sub-lieutenants.

Engineers are not required to attend a course of instruction or training, nor are the officers on the honorary list required to undergo drill.

The enlisted men of the Royal Naval Reserve are required to attend drill during each year for twenty-eight days, which during the first year must be in continuous periods of fourteen days each, but during succeeding years may be taken at any time in periods of not less than one week. The drills are with great guns, rifles, pistols, and cutlasses, and are held on board the various harbor drill ships, in the naval reserve batteries, built at convenient points on the coast, or abroad on board a man-of-

war in commission. At the batteries, the instructor is the naval officer commanding the surrounding coast-guard district.

Any men of the reserve who desire it may volunteer for service in the navy in time of peace, either on sea-going ships or for a course of instruction at the gunnery or torpedo schools.

Officers may resign at any time after appointment, unless called out by royal proclamation for service, when they are liable to serve during the continuance of any national emergency and until regularly discharged. They may be required to serve on any ship or other service, as the Admiralty may direct.

They are retired from the active list at the age of fifty-five years for lieutenants, fifty for sub-lieutenants, and fifty-five for engineers, and may be granted increased rank on the retired or honorary list, at the discretion of the Admiralty. When attending annual drill on board ship they mess with officers of the same rank, and are allowed 50 cents per day for mess expenses. If living on shore they are allowed lodging expenses per diem, for lieutenants, $2.50; sub-lieutenants, $1.75; and midshipmen, $1.25. Officers taking the authorized twelve months' course of training on board a ship in commission receive the same pay and allowances as regular officers with whom they rank during the period of service. After completing such service and receiving satisfactory certificates as to conduct and proficiency in gunnery, torpedo, and navigating duties, an annual retaining fee is granted of $125 for lieutenants, and $100 for sub-lieutenants, which is paid yearly as long as the officer remains on the active list. When called out for actual service an allowance for equipment is granted of $200 to lieutenants, $150 to sub-lieutenants, $100 to midshipmen, and $150 to engineers. Midshipmen and engineers also receive special rates of pay. If injured or killed while in service or attending drill, the same pensions or other allowances as are granted to regular officers are allowed.

A sub-lieutenant who has served one year in command of a first-class steam-ship of 1,500 tons or a sailing ship of 1,000 tons may be promoted to lieutenant; also, if he has served two years as first mate of an ocean mail steamer while holding a sub-lieutenant's commission and possesses a master's certificate.

A midshipman who has served six years as such and obtained a master's or first mate's certificate is eligible for promotion to sub-lieutenant; if not qualified for sub-lieutenant after nine years' service he will be removed from the lists.

Officers who have given up the sea as a profession will be removed from the list after four years, but may be granted honorary rank at the discretion of the Admiralty.

The enrollment of the enlisted force is for five years, when a man may take his discharge or re-enroll if fit. After fifteen years' service if enrolled over thirty years of age, or twenty years if under thirty, he is entitled to his discharge, and, if of the first class, to a deferred pen-

sion certificate, which entitles him after reaching the age of sixty to a pension of $60 a year.

Reserve men of the first class upon enrollment are entitled to one cap and ribbon, and on each re-enrollment to a suit of uniform clothing, also an annual retaining fee of $30, to be paid quarterly, or after completing the annual amount of drill. Transportation is furnished from their homes to and from the drill station; lodging and subsistence are furnished while in attendance, and they receive, in addition, the pay and allowances of seamen of the navy. The pay and allowances while in active service are the same as those of continuous service seamen. If sick, injured or killed in service or on drill, the pensions and other benefits are the same as are granted to regular seamen of the fleet.

After enrollment the certificate must be presented by the holder to an authorized officer once each six months, and if going on a voyage likely to extend longer than six months a special leave of absence not exceeding twelve months must be obtained, the leave being good only for the voyage and vessel for which granted. If he ships on another vessel he must appear before an authorized officer, and if he deserts his ship he forfeits the annual retainer. At any time this force is liable to be called out by royal proclamation for active service, which will not be extended longer than five years, when the men will be entitled to discharge from active service and will not be liable to any further call. When called out they are required to present themselves at the nearest naval station, and will be assigned to any vessels or stations on which their services may be needed. If serving abroad, they are liable to be taken out of their ship by any man-of-war which needs their services. If they do not present themselves as required, upon the issuance of the proclamation, they will be considered as deserters and treated accordingly.

If a man obtains a certificate and serves as master or mate, he may obtain his discharge from the reserve upon application. Other men wishing their discharge may obtain it upon the payment of $50; or, if the amount of retainer paid is less than $50, upon refunding such amount. All men who settle down to shore life during enrollment will be removed from the list, and will forfeit all claims to pension. When called out for service the time actually served counts double in estimating the years for pension.

Reserve men, second class, are governed by all the preceding regulations, except that the annual retaining fee is but $12.50; the pay and allowances while on drill, those of ordinary seamen; and while on active service, those of seamen. A suit of uniform clothing is issued to them annually free of charge. They are not entitled to pension for long service.

Reserve men, third class, receive no pay, but are entitled to a suit of uniform clothing upon enrollment and annually thereafter.

Firemen are paid an annual retainer of $25.

The uniform of officers and men of the Royal Naval Reserves is similar to that worn by corresponding grades in the regular service, but with readily noticeable distinctive marks. Any merchant ship commanded by an officer of the Royal Naval Reserves, and ten of whose crew are enrolled in the same corps, may be authorized by Admiralty warrant to fly the blue ensign.

Quite an array of honorary officers appear on the Royal Naval Reserve lists who add nothing to its strength, since they are not required to attend drill, nor are they liable to be called out for active service, except in case of emergency, when only those who have at any time been on the active list may be subject to such call. No allowances are granted these officers, and their only privileges are the right to wear a naval uniform and bear a military title. Honorary captains, not exceeding ten, may be appointed from Royal Naval Reserve officers retired, who on service have distinguished themselves in action with the enemy. The rank of honorary commander may be conferred on lieutenants, Royal Naval Reserve, who have done good service on the active list. They must have not less than fifteen years' seniority, unless they have been mentioned in dispatches for meritorious service, or have been employed on some special duty while serving with the fleet. This honorary rank may also be conferred upon marine superintendents of large ship companies. Commissions as honorary lieutenants may be issued by the Admiralty to: (1) Masters of merchant vessels possessing qualifications similar to those for lieutenants on the active list, but who are over forty years of age. (2) Royal Naval Reserve lieutenants who have retired on account of age or non-service. (3) Officers who have held a sub-lieutenant's commission on the active list. (4) Owners of sea-going pleasure yachts of 75 tons register and upwards who command and act as masters of their own yachts. (5) Superintendents of mercantile marine who have served as masters in command of first-class ships for not less than one year. Honorary sub-lieutenantcies may be granted to officers who have held the corresponding rank on the active list of the reserves, but who have been retired for age or non-service; also, to deputy superintendents of mercantile marine who have served one year and upwards as chief mates in merchant ships. Engineers of the reserve who have held commissions as such for not less than ten years may be allowed the rank of honorary chief engineer. This rank may also be conferred upon superintending engineers of large lines of ocean-going mail-steamers. Honorary paymasters may be appointed from officers of ten years' service as registrars or deputy registrars of reserves; and honorary assistant paymasters from similar officers of five years' service and not less than twenty-five years of age.

The total cost of the Royal Naval Reserves, provided in the naval estimates of 1888–'89, is placed at $1,118,236.

The details of the organization of the Royal Naval Reserve have been

given, since it is the corps which is brought most prominently to our notice in considering the question of establishing a reserve for our own Navy. Its weaknesses are apparent, and, although it has existed for nearly thirty years, it can scarcely be regarded as a favorable showing that its actual strength but slightly exceeds one half the authorized number of men and falls short of one third the authorized number of officers, after the expenditure of so much labor and money and the lapse of so long a time since its conception. Great efforts have been made to popularize the service, the accruing benefits have been extended and increased, and committees have been convened at various times to inquire into the working of the system and devise means for its improvement; but all with maximum results that are far from satisfactory. The material of which it is composed is admirable, but the system is open to the objections that these men, if drafted on board a modern man-of-war, would be nearly as useless as any other untrained men. Their qualifications as able seamen would find no scope, for the modern fighting ship is mastless, and requires, in addition to the engine-room force, only the men to direct the ship and operate the gun, torpedo, and electric armament. Their training would be found to be of little value, for they have no permanent organization, no permanent officers whom they know and to whom they are accustomed, no uniform system of instruction has been given them, and the weapons with which they have been in the habit of going through their annual drill are obsolete and no longer find a place on war ships. The short periods of training with strange comrades, strange officers, varied weapons, and unfamiliar surroundings, owing to their constantly changing the place at which they take their drill, can not possibly give them the discipline and systematic way of performing their duties so necessary to the fighting efficiency of that complicated machine—the war-ship of the present day. The full strength of the corps can never be available on short notice, for it is much scattered, not only over the United Kingdom, but over the face of the world, and it would be a liberal estimate to state that within a fortnight after being called out not more than one-third the enrolled strength, or six thousand men, could present themselves at the rendezvous, and these might find themselves drafted to a class of vessel with which they were totally unfamiliar, and stationed at a type of gun they had never seen.

The objections to placing the main reliance for a reserve for the Navy upon a scheme similar to the Royal Naval Reserve apply in this country with even greater force than in Great Britain. In the first place, we have not the force of native merchant seamen which that country possesses to draw from. Of the few ships and steam-vessels which still fly the United States flag upon the high seas not only the major part of the crews, but in many cases the officers, are of foreign birth, and of those who are native born but few have fixed residences or local ties which bring them back at short intervals to the same place. Even the fishing fleet is to a large extent manned by natives of the British

provinces. The fore-and-aft coasting fleet and the lake fleet are manned by crews who in only a limited sense can be called seamen, and it is notorious that a large proportion of our yachts are officered and manned by foreigners.

According to the report of the Commissioner of Navigation, Treasury Department, for 1886, the strength of the mercantile marine of the United States on July 1, 1886, was:

	No.	Tons.	Officers and crews.*
Steamers registered for foreign trade	111	128, 571	4, 178
Ships	298	444, 775	7, 787
Barks, barkentines, and brigs	630	329, 010	5, 758
Total	1, 039	902, 365	17, 723
Sixty-three per cent. of the crew stated to be foreigners	.....	.....	11, 165
Leaving number of Americans on foreign going vessels	.....	.....	6, 558
Total number of sea-going steamers over 100 tons, including coasting craft	339	506, 668	16, 466
Total number of sea-going sailing vessels, including coasting craft	6, 102	2, 060, 258	36, 054
Total	6, 441	2, 566, 926	52, 520
Total number of men in foreign-going vessels	.....	.....	17, 723
Total number of men in coasting vessels	.....	.....	34, 797
Forty-six per cent. of the crews stated to be foreigners	.....	.....	16, 007
Leaving number of Americans in coasting craft	.....	.....	18, 790
Number of Americans in foreign-going craft	.....	.....	6, 558
Total number of Americans afloat in United States sea-going vessels	.....	.....	25, 348

* Calculated from statements of Commissioner of Navigation, Treasury Department, Report 1886' page 194, of average number of men per 100 tons.

At about the same period the strength of the mercantile marine of Great Britain, etc., according to a parliamentary return of merchant shipping, dated July 1, 1887, was:

	No.	Tons.	Officers and crews.
Total number of registered sea-going steamers over 100 tons	4, 806	6, 543, 615	245, 385
Total number of registered sea-going sailing vessels	14, 584	4, 654, 214	116, 355
Total	19, 390	11, 197, 829	361, 740
Total vessels registered in the United Kingdom, exclusive of those for river and inland navigation:			
Sea-going steamers	.....	3, 911, 865	119, 055
Sea-going sailing vessels	.....	3, 232, 232	85, 415
Total	.....	7, 144, 097	204, 470

Of the personnel of these British vessels 41,856 are foreigners, which leaves the total number of British subjects afloat in vessels belonging to home ports 162,614; and this is the available strength possessed by

Great Britain from which to recruit her naval reserve, since the system is not extended to the colonies and other dependencies.

The number of men, already stated, actually enrolled in the Royal Naval Reserve is but 11 per cent. of this available force, and granting that equal results would attend the organization of such a force in this country we should have but 2,788 officers and men of all classes, of whom probably but a small proportion would be of the classes most desirable.

It can scarcely be maintained that this small force represents a reserve strength sufficient to fill our national naval needs in time of war. An added objection is the certainty that not without great opposition from ship-owners and masters could the Government attempt to maintain the right to take trained men out of merchant ships in time of need. Without such a right the force would be of no practical value.

The yacht clubs of the country number (Report Commissioner of Navigation, Treasury Department, 1886,) 53, and include 150 steam yachts, 250 schooner yachts, 400 sloop and cutter yachts, and about 1,200 miscellaneous small craft.

An examination of returns received at the Navy Department of the professional personnel of 211 yachts, steam and sail, representing nine of the leading clubs of the Atlantic sea-board, shows their composition to be:

	No.	Number native or naturalized citizens.
Sailing-masters and coast pilots	246	161
Other officers	118	26
Seamen	579	47
Ordinary seamen	68	5
Cooks, stewards, etc	264	.....
Engineers and machinists	75	44
Firemen	44	11
Total	1,394	294

The number of those who would probably be enrolled would form an immaterial addition to the strength of any proposed force.

From the preceding statements of facts it is evident that our available sea-faring population is so small and the probable number who could be enrolled so insignificant in comparison with the great necessities of the nation, that it appears scarcely worth the expenditure of much time, trouble, or money on the organization of a force which promises such minimum results. Its superficial instruction on the lines of the Royal Naval Reserve would produce a degree of efficiency which, to put it mildly, would be of a very doubtful character.

The seaman, in the limited sense in which we have been accustomed to use that term, no longer occupies the prominent place on the modern war ship. He was necessary, in his day, to skillfully control the motive

power of his ship, but that day has gone, and the naval seaman of the present day must be a man of more varied accomplishments and higher ability to receive the special instruction which has become so necessary for the efficient and intelligent manipulation of the weapons which are placed in his hands. There need be no fear that the "ready resource" and "nerve" of the seaman will not receive as much cultivation in the varied exercises for battle in the modern war ship as they ever did in a gale of wind, aloft in the sailing ships of the past.

A realization of this truth has led to the establishment and encouragement by the British Government of the force known as the Royal Naval Artillery Volunteers. Situated as we are, a development of a similar corps appears to present an efficient force with an organization nearly suited to our needs. It is voluntary, mainly self-supporting, and local in its organization. It is composed of men not professionally sea-faring, but with a taste for and a certain familiarity with nautical pursuits. It has shown itself an efficient body of infantry on shore and of naval artillery afloat; and although containing many men well up in the social scale it has proven the willingness and facility with which men not bred to the life can be transformed into efficient men-of-war's men, performing all duties except those of an advanced technical nature.

This corps was organized under an act of 1873, with an authorized strength of 2,000 officers and men classed "efficient." Early in 1888 it numbered 1,477 men and 65 officers.

For administrative purposes it is divided into brigades commanded by lieutenant-commanders, each brigade being assigned to a certain section of the coast, with headquarters at a sea-port within its district.

Four or more batteries, commanded by sub-lieutenants, compose a brigade, each battery containing 1 chief petty officer, 2 first-class petty officers, 2 second-class petty officers, 2 buglers, and 60 to 80 men, termed gunners; 1 surgeon, 1 bugle major, and 1 armorer are allowed each brigade.

As instructors the Admiralty details from the regular navy 1 lieutenant to each brigade, and 1 first-class petty officer to each battery.

Honorary members are authorized, who contribute to the funds of the corps, but are not enrolled for service. The appointment of an honorary commander to each brigade is allowed; also such honorary lieutenants and sub-lieutenants as the Admiralty may sanction. These appointments lapse when the corps is called out for active service, unless the Admiralty accepts the services of any such officers who may volunteer for active service.

Any person physically fit and over the age of seventeen years may be enrolled. Buglers may be enrolled at the age of fourteen years. The corps is subject to all regulations made for it by authority of the Admiralty, and may be called out for active service by royal proclamation. When so called out the members are liable to serve on any vessels of the navy employed for coast defense, or in any tenders or boats

attached to such vessels. They will be liable to perform all the ordinary duties of the vessel, except such as can be performed by practical seamen only. They will not be required to go aloft nor to work in the fire-room. If in camp with the army they will perform all camp duties, fatigues, etc., and will be under the immediate command of a naval officer. The instruction of the corps includes drills with great guns, rifles, pistols, and cutlasses, according to the navy drills. They are also required to become proficient in the compass, steering and sailing a boat or ship, heaving the lead, pulling an oar, and in making the most useful knots, bends, and splices. Annually a gun vessel is placed at the disposal of each brigade, with a regular naval officer in command, to afford practical experience on board a ship under way, and to teach the interior routine of the navy. Every officer is required to possess a competent knowledge of his duties and to give proper attention to drills. The uniform is that of the navy, with some distinctive differences.

When a man becomes well instructed in all the required branches, he is rated "efficient" and wears a badge. For each efficient in a brigade the Government grants an annual allowance of $7.50. The average number of efficients in 1887 was 1,050. The total cost to the Government for the year 1888–'89 is placed in the estimates at $32,626.

It is intended to utilize this force on board of gun-boats and coast-defense vessels in the defense of estuaries and harbors with which its personnel is familiar.

Australia maintains a corps of Naval Artillery Volunteers modeled on the similar force in Great Britain. It is drilled by officers of the royal navy, and has assigned it for instruction and also for local defense a number of cruising, coast-defending, and torpedo vessels.

In addition to these specially organized corps, the royal navy itself furnishes an admirable reserve force in the Seamen Pensioner Reserve, retired officers, and the Coast Guard. The first is composed of enlisted men of the navy who after twenty years' continuous service have taken out good-conduct pensions and retired from active service afloat. They number about 2,000, and may be called out until the age of fifty-five in time of war or emergency, and must attend drill fourteen days annually. Within the past year eligible retired naval officers have been interrogated as to their willingness to return to active service in case of war. Favorable responses have been received from many of them, and arrangements have been made by which they are to take an annual course at the gunnery and torpedo schools. They resume their relative positions upon taking active duty. The ages at which officers are compulsorily retired in the British navy is, lieutenants, forty-five years; commanders, fifty; captains, fifty-five; rear-admirals, sixty; admirals and vice-admirals sixty-five. Lieutenants and commanders are also retired if five years shall have elapsed since last service; captains, if seven years, and flag-officers if ten years have so elapsed. Officers

may voluntarily retire five years younger in each case, and may be granted increased retired rank.

The Coast Guard, numbering about 4,000 men, in 77 divisions, commanded by 36 commanders Royal Navy, 31 lieutenants Royal Navy, and 10 chief officers of Coast Guard, is composed of picked men from the navy and naval reserves. After a certain number of years' continuous service, to be determined by the Admiralty (at present nine years), and having at least one good-conduct badge, an enlisted man, upon the recommendation of his commanding officer, is eligible for appointment to the Coast Guard, when he may be detailed for duty at any of the Coast-Guard stations or barracks around the coasts of the United Kingdom, and will, as directed, patrol the coast, handle the rocket apparatus, and assist in manning the life-boats. The Coast Guard also man the revenue cruisers and are at all times liable to be embarked on vessels of the navy in case of emergency. One-half of the entire force is yearly sent on a cruise in the ships of the so-called steam reserve, this cruise usually lasting about six weeks, but having been extended to much longer periods during exceptional years. During this time the men are continuously drilled in the various duties of their grades. The half which does not go on the annual cruise is required to attend drill on board one of the harbor drill ships.

The Marine Pensioner Reserve furnishes an available force similar to the Seamen Pensioner Reserve. They number together 2,210 men. The Marine Artillery and Infantry on shore service, numbering about 6,100 officers and men, present a valuable trained force ready for immediate service afloat.

Owing to the small size of our present naval establishment, and the age and class of men making up the large majority of our war ships' complements, a pensioner reserve would not, in this country, produce a force of practical efficiency. With slight changes in existing laws a small but highly valuable trained reserve might be formed from men who take their discharges from the navy after an established term of service, and who fill certain requirements as to drill and conduct certificates. Our Marine Corps is too small for the duties which even now devolve upon it. There can, however, be no logical argument adduced against the conversion of our "coast guard" into a valuable, well-trained reserve, available for purely naval duty, and also for all the auxiliary coast-defense duties, as prevails in continental powers. If this force, comprising the Revenue Marine, Life-Saving, and Coast-Patrol service, Light-House service, Coast Survey service, and Coast Signal Service, can not be transferred to the absolute control of the Navy Department, it might be practicable to enact such laws as would make it a requisite for employment in them that the applicant should enroll himself in the naval reserve for general or special service. Were this done, there would be at once placed at the disposal of the Government, and under the training of the Navy Department, a body of about 3,000 or 4,000 men

who would be all the more valuable in their present duties from the naval discipline and instruction they would receive.

On the European continent the conditions are very dissimilar to those which prevail in Great Britain, where voluntary service is solely relied upon to furnish the force necessary in time of war. With scarcely an exception the maritime powers assert the right of the Government to the services of the maritime population whenever called upon; and, in order that those services may be of value, more or less complete systems of naval instruction are in operation.

FRANCE.

In France the entire male sea-faring population is enrolled in the *inscription maritime*, which includes all fishermen and boatmen on the coast and on the rivers to the head of tide-water. The enrollment takes place at the age of eighteen years, subject to conditions; from that time to the age of fifty years the man is at all times liable to be called out for active service in the navy.

The number of men enrolled is about 160,000 to 170,000, and from them about 2,400 are annually drafted into the navy for a period of seven years' service, of which two years may be spent on leave or in the reserve.

At the expiration of this service the *inscrit* passes for four years into the active naval reserve, where he is liable to a call at any moment unless he undertakes to employ himself in coast fishing, or in coasting vessels, in which case he will be summoned only in case of emergency. After this period he passes into the reserve second class. In calling out the reserves care is taken to exempt, as far as possible, pilots, masters, married men with families, and able seamen who have signed engagements for long voyages.

The *inscription maritime* dates from 1683, its inception being due to the intelligence and influence of the noted privateer, Jean Bart.

The number of men afloat in the navy and in reserve in the naval barracks is between 30,000 and 40,000. Only two-thirds of the men necessary to make up the annual waste of the force in active service is taken from the maritime inscription, the remaining one-third being taken from the military conscription. Young men who have been drafted for military service are allowed to volunteer for service in the navy, and if a sufficient number do not so volunteer, the quota is made up by selection at hazard from the military levies of different sections of the country.

When the necessities of the fleet require it, the minister of marine orders a levy and each maritime district is required to furnish a quota. The maritime prefect (a flag officer of the navy) of the district gives orders to his commissioners in the sub-districts, and they select the men from the lists of the *inscription* of the district. The men selected then at once repair to the designated port. No exemption or substitution is possible when once selected. When drafted for naval service the young men are sent first to one of the naval barracks where they are fitted with

uniform clothing and receive some preliminary instruction. They are then sent on board naval school-ships for one year's drill and instruction, after which they are subject to detail to ships of the fleet wherever needed.

All men enrolled in the *inscription* have certain privileges guaranteed them by the Government. They alone have the right to follow the sea or engage in fishing for a livelihood; they are exempt from all other public service, they have certain free educational advantages, are exempt from certain taxes, may travel at reduced rates, and may not have soldiers billeted upon them. In return they must hold themselves at all times ready to be called into active service, and must report themselves to authorized officers after long voyages and at other times as required. If injured or disabled they are entitled to a pension; after the age of fifty years are not liable for active service, and receive a small pension for the remainder of life.

Long-voyage merchant captains (*capitaines de long cours*) constitute a reserve force of officers who by law may be taken into the navy during war with the rank of ensign, and may be assigned to such duties and positions as they are considered most competent to fill. If qualified, they may be promoted to lieutenants. During times of peace they are not required to serve any time with the navy, though the advisability is now being considered of compelling all merchant captains, together with their subordinate officers, to undergo a certain amount of purely naval training on board vessels of war or torpedo boats, to familiarize them with possible duties in time of war.

To obtain the grade of *capitaine de long cours*, an officer of the mercantile marine must pass an examination to satisfy a commission that his acquirements are such as to make him competent to command sea-going merchant ships.

The Marine Artillery, although intended primarily for shore service in manning the sea-coast forts, forms a valuable reserve, available for transfer to the fleet. Their training with naval guns under naval discipline, and their administration by the Navy Department making the matter of such transfer but the consequence of an order. Their value as a re-enforcement to the force afloat is augmented by the fact that the greater part of the non-commissioned officers have served as seamen-gunners in the fleet. The seamen-gunners of the fleet are similarly available for transfer to the forts to re-enforce or replace the Marine Artillery and Infantry, and such mutual transfers have been not infrequent in the history of the French navy. The Marine Artillery number about 4,500 men, and the Marine-Infantry about 16,000 men.

GERMANY.

The organization and administration of the German navy, and the provision for a complete system of trained reserves, are characterized by the same thoroughness which has distinguished that nation as the fore-

most military power of the age. Naval efficiency alone has been here considered; traditions of the past and individual or class prejudices have not been consulted. The results are a highly-trained, harmonious force afloat, capable of immediate expansion to any possible needs; a homogeneous localized coast defense, and a unity of control over all things maritime or littoral—the application of sound military principles to naval warfare.

The navy is manned by volunteers and by conscription from the maritime population. All sea-faring men of the latter are enrolled and organized in a naval reserve, the Landwehr district officials being charged with its administration. Liability to service begins with the seventeenth year and ends with the forty-fifth. At the age of seventeen years a youth may volunteer for service in the fleet, and at the age of twenty he must be enrolled in either the active or reserve forces of the navy or army. If not drafted for the active navy he is enrolled in the naval reserves, and remains there for twelve years. Each year in the spring the force is called out, and may be called out at any other time for special reasons. At the end of twelve years the men who have completed all the required periods of training pass into the Seewehr second class; others who have had partial training into the Seewehr first class. The former are accorded the following privileges not accorded the latter: In time of peace they are not required to attend any drill or inspection; they are not required to report personally to the officer in charge of the muster rolls, and they are not required to obtain permission to emigrate unless specially notified of the existence or imminence of war, a simple notification to the naval authorities being required. The men enrolled who have not had naval training during the twelve years are passed into the first class of Landsturm. After five years' service in the seewehr first class the men pass into the second class, where they remain until the age of thirty-nine years, when they pass into the Landsturm second class, the last class called upon in time of war. In time of war no man passes into the second class seewehr or out of it.

If a man is conscripted for the navy he may be assigned to either the Sailor Divisions, the Dock-yard Divisions, the Sea Battalion (marines), or the Naval Artillery Divisions. To these may be added the Torpedo Divisions lately organized as a special corps to have charge of all torpedo work, mobile or fixed, whether in the fleet or in the defense of the coasts. A man who volunteers for service in the navy may at the end of one year's service be examined for a commission. If he passes the examination and is serving on a man-of-war he takes rank and position as an officer, and must serve four years in such capacity. He may then receive his discharge from active service, but must continue to serve for seven additional years as an officer of seewehr, subject to annual drill and a call at any time.

Men conscripted for the fleet must serve three years in active service, five years in the seewehr first class, and until the age of thirty-nine years

in the seewehr second class, after which they are transferred to the landsturm second class, where they remain enrolled until past the age limit. Men who pass seven years in active service may transfer directly into the seewehr second class. If they pass four years in active service they remain but three years in seewehr first class. They may be discharged from active service: (1) On furlough for duty in another branch of the public service; (2) on furlough to the reserves on surgeon's certificate; (3) on temporary furlough to exercise their calling, if they are pilots or pilots' assistants; also if they are assigned to the machinist personnel of the reserve; (4) if unfit for active duty; (5) if subject to punishment by the civil laws. Officers may be furloughed for similar reasons.

Officers of the seewehr first class comprise: (1) Naval officers fit for duty who leave the active service to voluntarily go upon the reserve list; (2) discharged naval cadets possessing certain qualifications, in addition to certificates of efficiency as officers of the reserve; (3) one year volunteers who receive, with discharge, certificates of qualification as officers of the reserve (these men are specially trained as candidates for such commissions); (4) men who have served their term of active service in the navy, and who, upon discharge, obtain a reserve officer's certificate, and possess other exceptional qualifications; (5) officers who have been discharged from active service for incapacity before completing twelve years' service may be assigned to the reserve upon again becoming fit for duty.

All officers on the reserve list are required to be respectable citizens and to live in a manner becoming an officer.

Every officer of seewehr first class may be eventually transferred to the seewehr second class: (1) When he has completed his term of service in the active navy and the seewehr first class; (2) when incapacitated for duty at sea but still able to perform shore duty; (3) when specially detailed. He may receive a final discharge from service when he has completed twelve years' active service, when totally incapacitated for duty, or when he obtains permission to emigrate.

Officers of the seewehr second class comprise: (1) Naval officers fit for duty, who on leaving active service are not assigned to the first class; (2) naval officers discharged from active service before reaching the seewehr age limit; (3) first class seewehr officers transferred as before stated; (4) petty-officers who hold seewehr officers' certificates, but who for any reason were not assigned to the first class as before provided.

The enlisted strength of the first and second class seewehr comprises: (1) Men who have served their time in the fleet and trained men who have served their time in the naval reserve as before stated; (2) the dock-yard personnel, including the machinists, firemen, and skilled laborers; (3) the Sea-Battalion—an infantry corps recruited from the maritime population and available for service afloat, but intended chiefly for the defense and protection of dock-yards and naval stations; (4) the

Naval Artillery—an essentially naval organization, its officers being line officers of the navy, its non-commissioned officers seamen-gunners, and three-fourths of its privates qualified gunnery-men detailed from the fleet. The remaining one-fourth is conscripted from the maritime population.

The men of the first class seewehr are called out periodically for mobilization and exercise. The officers may be called out for exercise three or four times yearly, for an aggregate training of eight weeks.

In addition to the combatant or line officers, the various reserve corps include medical officers, sea-battalion officers, naval artillery officers, and machinist engineers (warrant officers). These last are called out annually for four weeks to undergo training and practice in handling the machinery of a war vessel assigned for that purpose, and are subjected to a professional examination, to ascertain to what grade they are to be assigned in time of war.

Every officer and man of the reserves is assigned to a particular ship or station in the maritime district within which he resides, and upon the receipt of an order for mobilization goes directly to his designated post of duty.

As about 5,000 men are entered annually in the different branches of the navy and pass into one or other of the reserve corps, the trained naval force available at short notice is large and efficient.

REMARKS ON GERMAN, FRENCH, AND ENGLISH SYSTEMS OF COAST DEFENSE.

In considering the question of coast defense for the Empire, a military commission was appointed to investigate the subject and to report, from a military standpoint, upon the advisability of transferring the entire system to the single control of the navy. The report of this commission was emphatic in favoring such transfer. During the past year, in accordance with its recommendations, all the sea-coast defenses, including the formidable fortifications at Kiel, Wilhelmshaven, and the mouths of the Elbe and Weser, have been transferred from the army to the navy.

The reasons given for recommending the transfer are conclusive and sound in principle. They were—

(1) The guns and carriages of sea-coast fortifications are similar to those of the navy.

(2) As coast defense is chiefly against attacks from ships and naval landing parties, naval officers would more readily appreciate the points of weakness of attacking ships; the object of manœuvres by the movements of the ships; and would recognize the probable designs of the enemy from the preparations.

(3) As coast defenses are considerably made up of turrets moved by steam or hydraulic power, a class of men becomes necessary for the

manipulation of the machinery which exists in the navy, but not in the army.

(4) Men accustomed to nautical pursuits are better adapted to care for works situated in the mouths of rivers than would men without such familiarity. They would also co-operate with the submarine defenses more advantageously.

Complete unity of control is thus established, since the mobile torpedo defense and the submarine defenses of all descriptions were already in the hands of the navy.

The garrisons of the forts are drawn from the Naval Artillery Divisions, and the personnel of the torpedo defenses, mobile and fixed, form the Torpedo Division. The defense is localized by assigning all the available torpedo-boats and torpedo material to the districts of the coast, each district having its torpedo depot, and by providing in the scheme of mobilization that men and officers of the reserves shall proceed at once to a fort or depot within the district in which they reside.

To a limited extent the same system is followed in France. Each military port is commanded by a naval officer of high rank, who has command of all the forces afloat and on shore within the limits of his district. The sea-coast forts are all garrisoned by the Marine Artillery and Infantry, and the personnel for manipulating and caring for the torpedo boats, torpedoes, submarine mines, torpedo-store ships, and electric lights is drawn from the navy. Divisions of torpedo boats are permanently assigned to each of the military ports; twenty being at Cherbourg, fifteen at Brest, ten at L'Orient, ten at Rochefort, and twenty at Toulon.

It is also intended to have stationed at each of the chief ports of the country, other than military ports, six torpedo boats, and at each of the lesser ports, two torpedo boats. For the torpedo boats destined in time of war to act with the coast-defense squadrons there are to be established eight harbors of refuge, at each of which is to be stationed a torpedo depot ship.

The coast defense of Great Britain is notably the most inefficient of any of the great European powers. Owing to the divided control, lack of co operation, absence of digested schemes for mutual support, and the mixing of naval and military duties, the defense is unwieldy in its administration, unprepared for sudden work, and labors under the disadvantage of having military men in situations outside their legitimate sphere of action.

Recently, in view of the action taken by continental powers, the question has been agitated of transferring to the navy the entire system of coast defense, including submarine mining and the sea-coast fortifications. The idea has been discussed at some length between the War and Navy Departments, the former recognizing the arguments for the change, and the latter objecting only on the grounds of its already great administrative burden. At present, the defense afloat, with the

exception of submarine mining corps, is in charge of the navy. The dock-yard garrisons are Royal Marine Artillery and Infantry. The sea-coast forts are manned by regular army, militia and volunteer artillery.

The submarine mine defenses are confided to the Royal Engineers of the army, but the necessity for a certain amount of nautical skill is acknowledged in the present official composition of the submarine mining companies of the Royal Engineers. These companies are composed of sixty-two non-commissioned officers and men, Royal Engineers, and sixty men recruited from the nautical population and enrolled in the militia of the district in which they are to serve as "submarine miners." The semi-nautical composition is necessary, since most of the work has to be carried on in vessels of greater or less size and much of the time of land troops, without nautical knowledge, would otherwise be taken up in instructing the men to pull an oar and the officers to manage a boat in a tide-way. Naval officers of the present day are required to have a proficient knowledge of mining and countermining, as every modern battle-ship is supplied with a complete outfit of mines for her own protection and that of a harbor in which she may be lying, and every properly equipped modern war-ship has the necessary stores for running a line of counter mines.

That it is a waste of men and money to maintain two separate organizations, one of them but indifferently qualified owing to lack of nautical skill, to do the same class of work, is well recognized by the British authorities. That the entire system of submarine defense has not been transferred to naval control is owing chiefly to lack of men available in their navy as at present organized.

ITALY.

Italy possesses a most complete system of naval reserves. It is based on an *inscription* similar to that of France, but with a much wider application, since it includes, in addition to the merchant sailors, fishermen and boatmen, all persons whose occupations are connected with the sea, such as shipwrights, carpenters, calkers, machinists, firemen, and other similar artificers.

In 1887 the men enrolled on this list numbered 210,267. These are subject to call at any time, and must serve in the fleet or in the dock-yards as required.

The men needed for service in the fleet are annually drafted from the *inscription* for three years' active service, and five years in the reserve organized for service afloat. In addition, from the *inscription* are organized reserves, to furnish complementary forces to the regular navy, and auxiliary forces for local services and coast-defense garrisons. They are called out for short terms of drill annually in time of peace.

The older men of the several grades of line officers of the navy whose age entitles them to be withdrawn from active service at sea, or who for other reasons are not desirable for service afloat, are retired to the

reserve and placed in command of the auxiliary forces assigned to the coast defenses on shore.

Officers of the merchant service available for naval duty in time of war are placed upon a naval reserve list with the following ranks:

Lieutenant-commanders (*capitano di corveta*), superior merchant-ship captains who have had at least two years' experience in command of foreign-going steam-ships; lieutenants, sea-going merchant captains who have had six years' sea experience, and two years in command of steam-vessels; sub-lieutenants, sea-going merchant captains of three years' experience as officers of merchant ships; midshipmen, sea-going or coasting merchant captains, and others who have had one year's sea experience, and who pass a successful examination; chief engineers, second-class, chief engineers of merchant vessels of over 400 tons, and who have had not less than three years' service in such grade; assistant engineers, engineers who have had one year's service as such on similar vessels; surgeons, civil surgeons and physicians who are duly qualified.

Petty officers of the navy of eight years' active service, and not over forty-eight years of age, who are in good physical condition and have been discharged from the navy with good conduct discharge and first-class certificates, can enter the naval reserve as midshipmen if they are of the line; as assistant paymasters, if they are of that branch; or as assistant engineers, if they belong to the machinist branch.

Officers of the reserve may be advanced if they have the aptitude and pass the required examinations, provided that they do not pass above the regular officers of the same date. At the age of sixty-five years the superior reserve officers are placed upon the retired list, and at the age of fifty-five the subaltern officers are retired. In both cases they retain the right to wear the uniform of their naval rank.

The Government has the right to take such merchant vessels as it sees fit, on the outbreak of war, for naval service.

The men who are serving in such vessels on the outbreak of war may be retained on board to serve until the close of hostilities. The officers of the ship may be enrolled for the war in the grade they occupy on such ship, and will be placed on the reserve list with the grade they occupy, but never higher than lieutenant.

The lately adopted system of coast defense is an integral part of the naval reserve system. The navy since its organization has had exclusive charge of all torpedo-boats, torpedoes, submarine mines, and the personnel for manipulating them. It has charge also of the surveillance of the coasts, and of the military electric lighting. In addition, all batteries erected to command lines of torpedoes, or to prevent the operation of the boats of an enemy, are under the control of and manned by the navy.

To the reserves are now assigned all the additional coast defenses, including the fortifications; also, all duties connected with the *inscription*. The officers are those before mentioned as retired from active

service at sea, and who, for the reasons which caused their retirement, can best be spared from shipboard, but who, from their naval training, make most valuable coast artillerymen. A permanent assignment of three to eighteen torpedo boats to each of the fifteen principal ports of the kingdom is proposed.

RUSSIA.

In Russia the active navy, the naval reserve, and the coast defense are all so intimately connected that it is impossible to establish the line which separates their functions one from the other. The reserve of men is practically unlimited, as drafts can be made at any time from the land levies to supplement the force afloat.

The enrolled strength of the navy is much larger than is necessary to man the fleet, since the navy is, in addition, charged with the surveillance and partial defense of the coasts.

The coast is divided into maritime districts, at the head of each of which is a flag officer of the navy, who may be also the military governor of the district. For war purposes the coast is divided into defensive districts, under the command of the senior officer of the port or other place within the district. The command of such ports or places and the surrounding territory is confided to naval officers, except in cases where the defense of the land side is of more importance than that of the coast side.

The trained naval reserve force at the disposal of the Government comprises:

(1.) A large body of local naval officers who have left the general service, or who are not desirous of sea service; also a body of selected petty officers.

(2) Three divisions of the corps of seamen: One permanently assigned to the coast defense, one to the light-house service, and one to the semaphore or coast-signal service. The life-saving and hydrographic services are also under naval control, and are officered and manned from the navy.

(3) The revenue flotilla, whose personnel of officers and men is detailed from the navy for two or three years' service. A flag officer of the navy is in command. In peace it is under the finance department; in war the vessels are armed with torpedoes and the entire service reverts to the navy as a part of the torpedo flotilla.

A strong torpedo-boat flotilla manned by the navy is distributed to the maritime districts, and operates in conjunction with the revenue vessels.

The submarine defenses are in the hands of the navy, a detail of engineers from the army assisting in certain special branches.

AUSTRIA.

Service in the Austrian navy is obligatory on the maritime population. About 1,800 men are entered annually, who are required to

pass four years in active service and five years in the reserve. Upon enrollment the recruit is assigned to a company and battalion, and his name is carried continuously on its rolls at the barracks of the battalion until his final discharge, whether he is on active service in the fleet, on shore duty, or in the reserve.

The average force of trained men available is about 14,000, of whom 6,900 are in actual service, afloat, in the dock-yards, or under instruction in barracks, the remainder being the trained and organized reserve.

The harbor-masters' service, light-house service, signal service, and maritime custom-house service are under naval control, a large part of their personnel being recruited from the navy. They may, under the military organization of the state, be readily utilized in time of war.

Officers no longer fully efficient or desirable for service at sea, are borne on a special list, and are detailed for the above duties and for other duties on shore connected with the navy.

For defense the coast is divided into districts under the command of naval officers. To each district is assigned its proportion of the floating defenses, and of the torpedo matériel and personnel. The command of Pola, at which port is the only naval arsenal and dock-yard of the Empire, is entrusted to a flag officer of the navy, and its sea-face forts and batteries are manned by officers and men of the navy. At all other points on the coast having military importance, where naval interests prevail, the commandant of the place is a naval officer; where army interests are greater, the commandant is a military officer, but always with a naval officer on his staff. The navy has entire charge of all the mobile torpedo and submarine mine defenses.

SPAIN.

The Spanish Government maintains a trained and organized naval reserve force of about 50,000 men, available for service afloat, to supplement the active navy, and on shore to man the coast defenses. As in France, naval service is obligatory on the maritime population, a somewhat similar inscription being enforced.

The organization includes:

(1) A reserve corps of officers, composed of regular officers who for any reason are no longer fully efficient for service at sea; also petty officers and pilots who have been made officers for good service. These latter classes can rise no higher than the rank of lieutenant.

(2) Naval reserves, organized into battalions, formed from those men of the annual naval levy who are not required for active service in the fleet. They are called out for six weeks' service and drill annually.

(3) Naval district militia, composed of those men who have passed out of the naval levy.

(4) Corps of naval volunteers, recruited from the coast population, and intended to supplement the ordinary and extraordinary naval forces, also for the local defense of ports.

The revenue marine, the coast signal service, the fisheries guard, and the pilots are controlled by the Navy Department and are under the command of naval officers. The personnel of the various vessels of these services are drawn from the naval reserve.

For administrative and defensive purposes the coast is divided into departments, each commanded by a flag officer of the navy, who is charged with the surveillance of the coast and the supervision of the fisheries, the revenue marine, and the maritime inscription within his department. These departments (captaincies general), are divided into naval captaincies, and the latter into districts.

The divisions and subdivisions are commanded by naval officers; and according to the importance of the district, these officers are on the active or reserve lists, or even on the retired list; those of subaltern rank are the officers promoted from petty officers and pilots. Within the limits of his command each officer has charge of the harbor-master's duties, and direction of the naval levy. He is also chief of the local naval force, the semaphore, light-house, and revenue services

SWEDEN.

The Swedish navy is manned by voluntary enlistments in time of peace; but for war the entire maritime population, numbering about 80,000 availables, is organized as a reserve to supplement the regular navy and to efficiently man the coast defenses.

The organization comprises:

(1) A permanent reserve list of officers, composed of regular naval officers who, for any reason, are not fully efficient for sea service.

(2) A list of reserve officers, composed of officers of the merchant service, who, after a special course of study and passing an examination, may be commissioned with subaltern rank.

(3) A coast guard militia, organized in companies from the men enrolled in the maritime inscription. The inscription includes all seamen, fishermen, machinists, firemen, and residents of sea-ports. The companies are commanded by officers of the permanent reserve.

(4) The boatmen militia, maintained by the real-estate owners as a war and revenue tax. It is organized in companies, distributed to each maritime district, and is officered by naval officers and officers of the permanent reserve.

A part of this force is required to serve in the fleet and the remainder is called out for periodical drill.

The light-house, coast-signal, pilotage, and harbor-masters' services, also the hydrographic office and the nautical schools, are all under the control of the navy department.

The entire system of coast defenses is entrusted to the navy, for which purpose the coast is divided into departments, each commanded by a flag-officer of the navy, who is responsible for the efficient defense of the coast within the limits of his command. His headquarters are al-

ways at a military port. The forces at his disposal are the coast-guard companies and the boatmen militia, both commanded by the naval officers, active or reserve, in charge of the subdivisions or districts of the department.

NORWAY.

Norway has a system of reserves and coast defense similar to that of Sweden.

The men enrolled in the maritime inscription number about 27,000. Those who do not volunteer for service in the regular navy are organized in companies officered by naval officers, the force being known as the district naval militia. Service in the corps is for four years, when the men are passed into the coast-guard reserve, which is similarly organized and officered, and requires three years' service. Both of these corps are periodically drilled with naval and coast defense weapons in their respective districts.

The light-house, pilotage, coast-signal, and hydrographic services are under the administration of the navy department, and are in immediate charge of naval officers.

For defense the coast is divided into districts, each under the command of a naval officer, who commands all the naval militia within his district, and is charged with the efficient manning and fighting of the sea-coast forts. For this purpose he may call upon the army for assistance when necessary. In addition he is charged with the efficiency of the coast-signal service, with the duties of the maritime inscription, and with the primary instruction of the recruits.

HOLLAND.

The navy of Holland is recruited by voluntary enlistment and by assignment of conscripts from the annual militia levy. A conscript accepted for naval service serves four years, the entire first year being passed on sea service unless specially exempted. During the succeeding years he is not liable to be called out for more than six weeks' service or drill in any one year. In case of war the entire sea militia enrolled from the maritime population may be called out for service, but it is not required to serve in the colonies except in cases of great necessity.

DENMARK.

The Danish navy is recruited by conscription from the maritime population, all of whom are enrolled and liable to be called out for active naval service in time of war.

PORTUGAL.

The Portuguese navy is manned by voluntary enlistments, but a reserve force of 23,500 is kept enrolled from the maritime population for naval service in time of war.

GREECE.

Greece maintains a similar naval reserve force of about 30,000 men for possible war service. In time of peace the navy is recruited by voluntary enlistment.

TURKEY.

The Turkish navy is manned by drafts from the military levy. An available reserve force of about 44,500 sea-faring men is enrolled.

JAPAN.

Japan has an excellent system of naval reserves, formed of trained men who have passed a term of service in the regular navy. The navy is recruited both by voluntary enlistment and by conscription from the sea-faring classes. The number available is great, since a large portion of the sea-board population is engaged, during a part of the year at least, in fishing and serving in small craft. The number of deep-sea seamen is keeping pace with the yearly increase of tonnage, both steam and sail, and all Japanese merchant steamers and sailing vessels are now manned by natives. Conscripts pass three years in active service, four years in the reserve, and five years in the second reserve. Volunteers enlist for a long term of ten years or a short term of seven years. Long-term men must serve two additional years in the reserve, and short-term men must serve five years in the reserve.

The officers of reserve comprise regular officers who are retired from active service by reason of age. Retirement is compulsory at different ages for each grade. Sub-lieutenants must retire at forty years of age; lieutenants at forty-five; commanders at fifty; captains at fifty-five, and flag-officers at sixty. Staff officers of assimilated rank are retired at the same ages.

An additional reserve force of officers is provided from the graduates of the nautical training schools lately established. These schools educate boys for both executive and engineer duties on merchant vessels. In addition, a course of instruction in the drills with arms, as provided for the navy, is required, and naval discipline is enforced. Upon completing the course of instruction the students are required to enroll themselves in the naval reserve. Some few are annually appointed to the regular navy.

AUXILIARY VESSELS.

ENGLAND.

In addition to the personnel of a naval reserve, most maritime nations hold a reserve of matériel ready for naval war service. In Great Britain the Admiralty has inspected and classed all the best steamers of its mercantile marine, but, except in a few cases, without having entered

into any definite arrangements with the owners as to the terms under which they are to be available for government service. The armaments and equipments necessary to convert a number of these into armed cruisers are kept ready for immediate use. Complete sets are stored for 14 ships at Portsmouth, for 9 ships at Devonport, and for 7 ships at Chatham. Ten ships are to carry 12 guns, 10 ships 10 guns, and 10 ships 8 guns, each.

The armaments of these comprise 112 5-inch breech-loading rifles, 76 40-pounder breech-loading rifles, 64 7-inch muzzle-loading rifles, and 48 64-pounder muzzle-loading rifles. There are also 6 complete sets of armaments stored at Simon's Bay, 6 at Sydney, 6 at Bombay and 6 at Hong-Kong.

The Admiralty has entered into agreements with the White Star, Cunard, and Peninsular and Oriental steam-ship lines, by which certain of their best vessels are held at the disposition of the Government for purchase or hire at any time.

The agreement with the White Star Line provides that four vessels—

Name.	Tons gross.	Value.
Britannic	5,004	$632,645
Germanic	5,008	632,645
Adriatic	3,888	486,650
Celtic	3,867	486,650

be held for sale at the prices named, plus 10 per cent. for compulsory sales, less an abatement of 6 per cent. per annum for the period that may elapse between January 1, 1887, and the date of sale.

For charter the monthly rate of hire is to be $4.86 per gross ton, the owners providing crew; or $3.65 per gross ton, the Admiralty finding crew.

Two additional large-sized, high-speed, twin-screw steel vessels are to be built by this company on plans approved by the Admiralty. It is provided that the engines and boilers be placed below the water-line, that the steering-gear be protected, and that the hulls be divided into numerous water-tight compartments. In consideration, an annual subvention of $3.65 per gross ton is to be paid until January 1, 1894, and longer if the Admiralty extends the time, so long as the vessels carry the mails; and $4.86 per ton in case the mail contract is annulled. The annual charge for each vessel will be $31,622 while they have the mail contract, and $41,365 should the mails be withdrawn from them. The agreed monthly rate of hire in case the Admiralty should charter these vessels is to be $4.86 per gross ton, Admiralty providing the crew, or $5.47 per ton if owners are required to find the crew. In case of purchase the price to be the cost price subject to the conditions provided for the other four vessels.

The agreement with the Cunard Company provides that the following vessels be held for sale or hire to the Admiralty under terms similar to those made with the White Star Line Company:

Name.	Tons gross.	Value.
Etruria	7,718	$1,508,615
Umbria	7,718	1,464,816
Aurania	7,269	1,167,960
Servia	7,392	939,234
Gallia	4,809	496,383

As an additional consideration, the Admiralty agrees to pay an annual subvention for the *Etraria*, *Umbria*, and *Aurania* indentical with that granted to the vessels building by the White Star Line. New vessels built by the Cunard Company are to have their plans submitted to the Admiralty for approval, and are to be suitable for armed service as specified in the case of the new White Star steamers. In compensation, a subvention equal to that granted the White Star steamers is to be paid.

In August, 1887, an arrangement was made with the P. and O. Steamship Company, by which, in consideration of an annual subvention of $17,033 payable for each of the three new steam-ships, *Victoria*, *Britannia*, and *Oceania*, of 6,300 tons each, the company holds these vessels at the disposal of the Government for service as cruisers or transports whenever required. Seven other vessels are held by the company in the same manner, but without charge—the *Aracadia*, *Valetta*, *Massillia*, *Rome*, *Carthage*, *Ballarat*, and *Paramatta*, in all over 48,000 tons.

The agreements with all of the companies stipulate that the Admiralty shall have the right to place such fittings on board as will enable the vessels to be armed and equipped on the shortest notice; and some of the vessels are so fitted. They provide also that the crews engaged shall as far as possible be Royal Naval Reserve men, and that the owners shall endeavor to arrange that their services shall be available to the Government.

The International and Inman Line is building two steel twin-screw steamers, the *City of New York* and *City of Paris*, designed to meet the Admiralty requirements and to receive a subvention similar to that of the White Star and Cunard vessels.

These vessels will excel anything yet built for ocean trade; and, as the line to which they belong is owned chiefly in the United States, it is much to be desired that their services should be retained by our Government as auxiliary cruisers. It is the undoubted intention of the British Admiralty to so retain them if arrangements can be made with the owners. They are each of 10,500 tons gross measurement, are 560 feet long over all, 63¼ feet beam, 42 feet depth, have four complete decks, complete double bottoms, and are divided by fourteen water-tight bulkheads without openings below the upper deck. A mean

speed of 19 knots is to be maintained throughout the year. The motive power consists of two sets of triple-expansion engines, separated from each other by a longitudinal water-tight bulkhead and developing 18,000 horse-power with forced draft. Three sets of boilers, each set in a water-tight compartment, supply steam. Hydraulic steering, hoisting, and anchor gear is used. The rudder is well below the water-line, and is on the Biles system. Rolling tanks are built on the main deck to steady the vessel in a sea-way. Both vessels will be ready for service during the coming autumn, the first one taking her place on the line at an early date.

FRANCE.

The French Government pays both a construction and a navigation bounty for all vessels built in France. Those vessels built to fill certain requirements of the Navy Department and in accordance with plans approved by naval officials, receive an increase of 15 per cent. on the ordinary bounty.

For all merchant vessels the construction bounty is $11.58 per ton, gross, of iron or steel vessels, $7.72 for composite vessels, $3.86 for wooden vessels of 200 tons or over, and $1.93 for wooden vessels less than 200 tons. For each 100 kilograms of machinery placed on board, including engines, boilers, and their dependencies, $2.32 is allowed. The navigation bounty is paid at the rate of 29 cents per ton for each 1,000 miles traversed in making a voyage in a foreign trade. It is reduced by 1 cent per ton for each year the vessel has been afloat if built of metal, and by 1½ cents per ton if built of wood. Vessels claiming the 15 per cent. increase must receive certificates from a specially designated naval constructor that they are suitable for naval service in point of construction, internal subdivision, and motive power, and that the boilers can stand the tests adopted for the navy. The stability must be such that with all cruiser weights on board the vessel will be in proper trim for safe navigation. The water-tight subdivision must be such that with any one compartment filled the vessel will float with safety. Separate pumping arrangements must be fitted for each compartment. The vessel must make 13½ knots on trial when loaded to an amount corresponding to its equipment for armed service; the coal capacity, when so loaded, must be sufficient to cover a distance of 6,000 knots at 10 knots; and the bunker arrangement must be such as to afford suitable coal protection to the machinery above or near the water line. The decks must be properly strengthened to carry a battery of 14-centimetre (5½-inch) B. L. R. in such numbers as shall be determined by the Minister of Marine. The forward and after guns must have chase fire; the pivot sockets and all other metal work needed for working the guns must be in place if it does not interfere with the usual service of the vessel. Suitable magazines must be established, and scuttles must be suitably placed in the decks to secure an efficient supply

of ammunition. Complete plans, on a scale of $\frac{15}{1000}$, must be furnished to the Navy Department. The pivot bolts and gun tracks are prepared by the Navy Department and kept in store at designated places, together with the guns and their carriages.

All steamers having postal contracts are required to have special fittings for placing an armament on board. A premium for speed is granted.

All merchant vessels may be requisitioned by the Government for service in time of war.

The French Government has recently retained the services of fourteen steamers of the Messageries Maritime and Compagnie Transatlantique, as armed cruisers in time of war. These vessels are at once to receive their gun fittings. The armament of the *Champagne* and class is to consist of seven 14-centimetre B. L. R. and eight 37-millimetre Hotchkiss revolving cannon.

ITALY.

In Italy liberal construction and navigation bounties are paid by the Government for the encouragement of the national shipping interests. A special bounty of 10 to 20 per cent. increase is paid for the construction of hull, engines, and boilers of vessels specially adapted for war service and built on plans approved by the Navy Department. The requirements for such vessels, as to construction and water-tight subdivision, are very similar to those of the French Government. Where the engines and boilers are near or above the water line, they must have a thickness of coal between them and the sides of the ship of not less than 5 feet. A speed of not less than 14 knots must be developed on trial made over a base measured by a Government officer, and the coal capacity must be for not less than 4,000 knots at 10 knots per hour.

Builders desirous of receiving the increased bounty must declare their intention to build according to the Government requirements, and vessels so declared will be subject to inspection by Goverment officials, while building. Vessels receiving the special bounty may not be sold to foreigners without permission of the Government. The Government asserts the right to take all such vessels into the national service upon the outbreak of war.

The bounties for ship construction will be paid for a period of ten years from the approval of the law (February 14, 1886). Iron or steel vessels, steam or sail, receive $11.58 per ton gross; wooden sailing vessels, $2.90 per ton; boats, barges, etc., of iron or steel, $5.79 per ton; marine engines receive $1.93 per indicated horse-power; and marine boilers, $1.16 per cwt.

Navigation bounties will be paid during the same period at the rate of 13 cents per net ton for each 1,000 miles traversed by national vessels, sail or steam, that engage in trade in all parts of the world, except in the Mediterranean and on the coast of Europe.

GERMANY.

All vessels owned in the German Empire are enrolled and subject to be taken by the Government for public service in time of war at a price fixed when the vessel is enrolled, by a commission representing the Government and the owners. Batteries and equipments for such as the Government has decided to employ as cruisers are kept in store complete in all respects for each vessel. A full war complement of officers and men of the reserves is kept assigned to each of these vessels. On the receipt of orders for mobilization they proceed at once to the depot at which the vessel's equipments are stored, and take up the familiar duties to which they are assigned. On very short notice these auxiliary cruisers can be placed in commission with trained crews and completely equipped.

RUSSIA.

To supplement the cruising fleet of the Russian navy the merchants of St. Petersburg and Moscow have organized a number of large steamships into an auxiliary force, known as the "volunteer fleet." In 1888 this force included thirteen large steamers, each capable of mounting six to fourteen B. L. R., together with a supply of rapid-fire and machine-guns.

The Direction consists of a special committee, connected with the Navy Department, and with its principal office in St. Petersburg. It controls the entire administration of the fleet. The composition of the committee is partly naval and partly civil. A president and two officers selected from the navy are appointed by the imperial authority, and two members by the St. Petersburg bourse, with one by that of Moscow.

By an imperial order of 1885 it is directed that the vessels of this fleet shall be employed for a period of six years as mail carriers and troop and store transports between Odessa and the Siberian ports of the North Pacific. An annual subsidy of $395,500 is paid the commission, on condition that its vessels make a total of 141,000 knots between Pacific and Black Sea ports, and that in case of war the vessels be at once placed at the disposal of the Government.

A fleet has recently been formed for trade and passage between Black Sea ports whose remoter object is evidently a military one, since it is under the management of a naval officer detailed by the Admiralty, and is partly manned by a nucleus of petty officers and seamen of the navy paid by the Government.

An increased subsidy is granted to new ships built according to Admiralty plans, with the necessary gun fittings and other arrangements for fitting them as war cruisers.

SPAIN.

In March, 1887, the Spanish Government entered into an arrangement with the Spanish Transatlantic Steamship Company which con-

templates the establishment of a comprehensive steam-ship service, and also an efficient fleet of auxiliary mercantile cruisers for war service.

The vessels are to be built of iron or steel, and sufficiently strong to carry heavy batteries. They are to carry the mails, and to be held ready to perform whatever extra service may be required for war purposes. The Government agrees to pay a bounty of $1.83 per mile traversed on an American line, and lesser amounts for service to the Philippinès, Buenos Ayres, and Fernando Po; payments to be made monthly by the minister of foreign relations. The steamers on the American and West India line are to be of 4,500 tons measurement.

AUSTRIA.

Austria asserts the right of the Government to take any vessel for national service in time of war at a fixed compensation.

SWEDEN.

Sweden has enrolled all desirable vessels, and keeps stored at seaports complete torpedo outfits for all suitable coast and harbor craft.

JAPAN.

Encouragement is given to steam-ship building in Japan, and those vessels lately built are designed with a view to their conversion into light armed cruisers in case of war.

GENERAL REMARKS UPON CONDITIONS GOVERNING THE PROPER DETERMINATION OF A SYSTEM OF NAVAL RESERVES AND COAST DEFENSE.

In considering the question of the formation of a naval reserve force, it will be well to contemplate the present conditions of naval warfare and to definitely decide on the rôle we require the naval reserves to play in the national defenses.

With this in view, and with an appreciation of our present needs and resources, it is but logical to assert that a body of artillerymen and torpedoists, trained with naval weapons and under naval discipline, organized locally according to naval systems, having a familiarity with nautical affairs either from business or pleasure associations, and available for naval service in all its branches, is the most valuable corps we could enroll in a reserve to supplement our cruising fleet and defend our coasts in time of war.

The almost entire disappearance of sail power from the modern fighting ship, and the introduction of complicated carriages and costly guns, firing expensive charges at high velocities and furnished with accurate compensating sights, again bring the fighting element pre-eminently

to the front as the line to be fostered. To the careful training of this component of a war-ship's complement all else on board such ship must be subordinated.

In the naval vessels of the ancients, the oars with men chained to them, were simply the machine by which the entirely distinct fighting force was moved from point to point to engage the similar force on other vessels, and, in case the scene of hostilities was transferred to the shore, to be landed and operated as an army. The motive power being certain and continuous, the vessel itself became a powerful weapon of offense, always ready, under the control of the fighting officer in command, to be thrown with crushing effect against an adversary at decisive moments. The conditions of the present age are similar. The oars have been replaced by the screw propeller, the manual labor by the steam-engine, controlled and manipulated as directed by the commanding officer. Even the military tops with their detachments of armed men are reproduced to perform their ancient functions. Again is the officer in command enabled to direct his entire attention to placing his combatant force in a position where its weapons will be effective; he has, again, that most powerful of all weapons, the ram, ready at his hand for instant use; and, again, it is becoming not infrequent for the fighting force of a fleet to be landed for operations on shore, which are becoming widened in their scope until entire campaigns have been and will continue to be made by such a force.

During the long era of sailing fleets the sailing and fighting forces both of men and officers gradually became merged, until during a past generation the art of manœuvering a ship under sail came to be looked upon as the chief end and aim of the naval profession, and the more important arts of naval gunnery and military efficiency were subordinated to the dextrous handling of sails and spars. The reason was obvious, for the safety of the vessel at all times and her efficiency in action depended entirely upon the skill of her officers and men as seamen, while the ordnance carried required no especial skill or training for its efficient service. The sails and spars as a useful motive equipment have disappeared, and naval ordnance has developed from the primitive muzzle-loading smooth-bore, mounted on a simple carriage, and depending entirely upon manual power for its manipulation, into the powerful breech-loading rifle, depending almost entirely for its control upon the proper handling of complicated mechanism and the adjustment of water, steam, or air pressure. Skill as gunners is the great requirement of the man-of-war seamen of the day; and now with the advent of new ideas, new weapons and new modes of handling them, we should not forget our former policy of standing pre-eminent in naval gunnery and fall to the rear of other nations who have thrown, or are throwing, overboard ideas which do not suit the altered conditions, and who are advancing on the road which all must take sooner or later, while we remain stationary, content to believe that the system of train-

ing and organization, which was the best of its day, in a past generation, is still equal to the requirements of this rapidly progressive age. As the guns have developed in power, and their carriages in weight and complexity of detail, so the number of men necessary for their proper working has become much reduced from the force required for the simpler and feebler forms of ordnance.

But, where the best gun of a quarter of a century ago (and still existing on board most of our naval vessels) required but a couple of men with good judgment, careful training, and extra intelligence and ability, the modern gun requires every man to possess these attributes. That every enlisted man does not possess these qualities, and can not be given the necessary training without long and patient instruction, every officer who has attempted to familiarize the average gun's crew with modern weapons of the main or secondary batteries will readily bear witness.

All sea officers—so-called line officers—eligible for command, may not necessarily be specialists as gunners, torpedoists, or engineers. They should have subordinates who are such specialists, and they must have sufficient knowledge of each branch to intelligently direct the whole, and get the most efficient work from the weapons and engines that may be placed under their control. A commanding officer must be a seaman in the highest sense of the term, quick of judgment, ready of resource, and with a thorough comprehension of the capabilities of every part of the military machine under his command. In the battle-ship of the day he is furnished with a machine more complicated, and with forces more powerful, than have ever before been concentrated in a single weapon. The political effect of the loss of even one such ship in action, representing millions of dollars and years of labor, would be such as should cause the exercise of the greatest care in selecting the men upon whom to place the immense responsibility involved. Only years of training in a special school can produce such men, and that school is the regular Navy, organized to furnish a thorough preparatory training for the one great climax of the naval profession—the taking of such ships into action and obtaining from them the best results of which they are capable.

The auxiliary forces can not be expected to furnish officers of such varied attainments, and the organization of separate reserve corps of specialists presents the only available means by which we may obtain an efficient whole.

All vessels for sea service must be commanded and navigated by practical seamen knowing thoroughly the capabilities of their vessels. If merchant vessels are armed for war service the officers who command and navigate them in peaceful pursuits would still be most efficient in similar positions, but the officers and men who direct the guns and manipulate the torpedoes require a long technical training of a different sort, for which sea-faring men enrolled on the auxiliary lists would scarcely find the time.

An efficient combatant naval reserve man must be a skilled gunner or torpedoist, trained with naval weapons under naval systems. His qualifications as a seaman, in the ordinary acceptation of that term, are subordinate.

The first organized torpedo corps was that of the late Confederate States government. It had a military organization and its officers bore military titles, but the chief of the corps was an ex-officer of the United States Navy, as were also the leading subordinate officers. The men were carefully selected for fitness, receiving special privileges, and also prize money for successful services, as is customary in the navy.

In every continental power the navy has complete charge of the submarine defenses. In Great Britain the necessity for nautical knowledge is recognized in the semi-nautical composition of the submarine mining companies.

In examining the systems of coast defense prevailing upon the continent it will be seen that all the maritime powers adopt the sound military principle that the defense of a harbor or section of coast should be under a single control, and that the officer charged with such defense must have absolute command of all the forces within the limits of his command. No defense, however gallant and well managed the separate branches of it may be, can succeed against an active enemy unless these branches work with a complete mutual understanding and cooperation, and are thoroughly interdependent. The almost unanimous concensus of opinion of the military nations of Europe assigns this single control to the navy, as the branch of their public service to be trusted with this important part of the national defense; since the major part of a coast defense is purely nautical in its character, and requires a personnel of necessity trained in nautical affairs.

The desirability of localizing as much as possible the defense of the coasts is conceded by all the powers considered. Particularly is this the case with submarine mining and torpedo-boat work, the efficiency of which, to so great an extent, is governed by a knowledge of local peculiarities of depths, currents, character of bottom, and configuration of the coasts. These differ so greatly at different places and require such different methods of working, that only a local residence, with local nautical experience, will give the necessary practical knowledge for efficient work in time of need. For the same reasons the vedette boats which watch the approaches, the guard and gun boats and floating batteries which defend the mine fields, and the torpedo flotillas should be manned by local forces with local nautical experience and naval training under regular or auxiliary naval officers.

An added consideration in favor of localizing the personnel of the coast defense is that coasts and especially river bottoms are unhealthy as a rule to those not acclimated, who, while otherwise valuable, are liable to be rendered inefficient by changes of water, diet, and climatic influences.

PROPOSED UNITED STATES NAVAL RESERVES.

A careful perusal of the preceding pages descriptive of the systems of naval reserves adopted by nations which make the art of war a serious study, and of the arguments by which they have been governed, will present sufficient reasons why the views of the Navy Department coincide in general with the provisions of the bill introduced by Mr. Whitthorne and now pending in Congress. The most important features of the bill are the establishment of the right of the Government to the services of a certain portion of its citizens for duty in the Navy in the event of war, and the provision for organizing and instructing a part of this available force in the duties they would then be called upon to perform.

The organizations provided for are voluntary and largely self-supporting and self-instructing. They are to be aided by money grants from the Government in the shape of pay and allowances during the annual drills; by the transfer of such matériel as can be spared from the Navy, and by the detail of officers and petty officers of the regular Navy to direct the training, and care for the Government property. This force would be available for sea service on national naval vessels, if called upon, and for furnishing the combatant complement of auxiliary mercantile cruisers when armed for war service. In a comprehensive scheme of coast defense its additional duty would be to protect the coasts and harbors by manning coast and local defense vessels, laying mines, manipulating electric lights, and furnishing the combatant force for torpedo boats, tugs, and auxiliary vessels of all descriptions utilized for war purposes.

Two branches of the naval reserves are provided for by the Whitthorne bill, the first comprising organizations recruited from the naval militia, and the second composed of seafaring men possessing the technical training necessary for the efficient management of ships and engines.

From the naval militia it is proposed to organize two distinct corps, one for gunnery duties, to be called the Naval Reserve Artillery, and one for torpedo work, to be called the Naval Reserve Torpedo Corps. The duties of the first-mentioned corps will be confined to manning the guns on regular or auxiliary naval vessels. The duties of the second corps will be the manipulation of torpedo armament, mobile and fixed, with all their accessories. Both corps will be liable for service wherever needed, at the discretion of the President.

Complete units, or tactical parts of units—the battery, the gun crew, and the torpedo crew—will be organized locally in sea-board, lake-side, or river-port towns; and when detailed for service will be kept together and not separated from their own officers. When naval ves-

sels are furnished for the instruction of the units, naval officers will command.

The naval militia branch is placed first in importance because it is upon the coast defenders that the brunt of a maritime war would fall, and the men to bear the weight of a foreign naval attack should have the best system of organization, drill, and equipment that it is possible to give.

The organizations being local, the officers and men would have an intimate knowledge of the capabilities of their immediate neighborhood for offense and defense, and would be much more valuable at such a place than would a body of entirely strange sea-faring men suddenly ordered to that service.

Owing to the desire of every man to have his own home in a condition of defense or state of preparation for war, the officers and men of the organized part of the naval militia could be trusted to instruct themselves as efficiently as the means placed at their disposal by the Government would allow.

Appropriations and voluntary subscriptions to maintain and properly equip such organizations may be reasonably expected from local governments or individuals whose moneyed interests they are intended to protect. As an always available, efficient land force, these organizations could be used in emergencies to re-enforce or replace the land militia. And, not least in importance, they would bring the Navy into closer contact with the people, make it a living reality in many places where it is now but a name, disseminate a knowledge of the capabilities and needs of the service at places where the people who think at all about it imagine a naval officer's sole duty is to sail a ship, or point to the rapidity with which a fleet was improvised under abnormal circumstances a quarter of a century ago, forgetting the special service for which alone it was organized, and the complete absence of a naval opponent. Any interest taken in the organization, increase, and improvement of the auxiliary forces would naturally redound to the benefit of the parent service; and that such interest will be taken is reasonable to suppose, judging from the great numbers of persons throughout the country with nautical tastes. The same reasons which draw men of ability, position, and wealth into the ranks or other relationships with the National Guard of the States, will draw similar men with nautical tastes into the reserve organized from the naval militia.

A close touch with the regular Navy is maintained by providing for a uniform system of organization, instruction, and equipment under the control of the Navy Department; the examination by a board of naval officers of candidates for commissions from the President; and the annual mustering of the entire force into the service of the United States for a period of training on board ship or in batteries, during which time it would be an integral part of the Navy, with rank, pay, and privi-

leges, and subject to the same regulations as officers and men of the regular service.

To supply the nautical experience necessary to complete the complements of auxiliary vessels, and, if necessary to supplement the regular force, the second branch is provided for. It will be known as the Navigating Naval Reserve, and is to be composed of masters, mates, engineers, petty officers, seamen, and firemen of vessels of the mercantile marine and volunteers from any of the classes enrolled in the Naval Militia who may be found, by a board of naval officers, to be physically and professionally qualified, and who are citizens of the United States. These men will be enrolled in grades and ratings corresponding to those of the Navy for which they may be qualified. They will not be required to attend drills, and will be subject only to annual examination by authorized officers to ascertain their continued fitness for duty, in consideration of which they will receive an annual retaining fee, and will have the privilege of rank and uniform, subject to conditions. If any of this class choose to join the militia organizations for training with arms, or to take a course of training in naval vessels, their services will be all the more valuable, and such training will be encouraged.

As the number required is not excessive, very great care should be exercised in selecting the officers, petty officers, and men for this branch of the naval reserves, since their assigned duties will require a high degree of nautical professional skill. The line officers who do not take a course of training with arms will occupy a position analogous to the sailing-master class of early naval history, and will be entrusted with the navigating and watch-keeping duties, while the engine-room force will be required only to continue in the exercise of their customary occupations. The enlisted force for deck duties will be composed of thoroughly trained seamen of the mercantile marine, and preferably the quartermasters, boatswains, and mates not qualified for commissions. The number required is not large, but their duties are highly important, and efforts will be made to secure a sufficient number for quartermasters', boatswains'-mates', and coxswains' duties. These duties, being purely professional, will not require a knowledge of naval gunnery, and a compulsory course of technical training in that art can be dispensed with.

In addition to the personnel of the naval reserve, the bill referred to provides for a reserve of vessels, to be enrolled from such vessels of the mercantile marine as fill the requirements provided. In anticipation of legislation of this character, a system of inspection of merchant steamers by naval officers has been inaugurated, as a result of which there are already classed at the Navy Department, on the auxiliary navy lists, a number of vessels suitable for cruisers, transports, dispatch, torpedo, and gun vessels, with accurate data as to their capabilities. The bill also provides that provisional contracts may be made with the owners of suitable vessels for a term of years, by which the owners hold

them subject to call of the Government, at a fixed price for sale or charter. The scheme contemplates that the fittings for mounting the guns shall be placed on such vessels as are to be armed, that the guns themselves shall be stored at convenient places, or placed in charge of the local battery of the Naval Reserve Artillery, and that the plans for all necessary alterations shall be carefully drawn up and filed with responsible firms under provisional contracts.

To each vessel a proper assignment of the naval reserve forces will be made, efforts being directed towards retaining the officers and men, for both deck and engine-room duties, of the Navigating Naval Reserve who are already serving on the vessel; also to assign the units of the naval militia organizations to vessels owned or fitted out in the port where such organizations may be recruited.

With such a system as this the Government in case of an emergency will have but to notify the selected steamers to proceed to their ports of fitting out; the contractors for alteration may at once take in hand the work with which they have familiarized themselves; the Navigating Naval Reserve complement can, if necessary, be made complete, the guns stored or in charge of the local Naval Reserve Artillery battery be hoisted in, the battery take up its quarters on board, and in a very few days the ship could take the sea or assume her assigned duties, efficiently manned, armed, and equipped, and backed by the strong feeling of local pride and interest that would be sure to follow her fortunes.

The scheme outlined is in accordance with the traditions and policy of this nation. It proposes no increase in the personnel of the regular Navy, but places the main reliance for increased naval strength on an organized sea militia, the localities most interested in the efficiency of such organizations bearing a great part of the expense and labor of their maintenance.

Incidentally encouragement is given to the ship-building and ship-owning interests, and incentives are extended to the seafaring classes for improvement in their callings.

The scheme is comprehensive in that it provides for an expansion equal to any possible needs, and definitely assigns each unit of the proposed organizations to duties to be performed in time of war.

It is economical in that it will place at the disposal of the Government a strong, well-trained naval force, second to none in the composition of its personnel, and will render a fleet of steam-ships, built by private enterprise and maintained in ordinary trade in time of peace, immediately available for auxiliary naval service on the outbreak of war—the cost to the Government being but nominal in view of the great national value of possessing such a reserve force of men and ships.

If the number of trained men exceeds the force required to supplement the regular naval strength and man the auxiliary vessels, the surplus becomes available for manning the shore defenses or for other duty assigned by the President. The Board of Fortifications, appointed

under act of Congress of March 3, 1885, in its report recommends an expenditure of $126,377,800, of which $37,965,800 is for guns and mountings, $14,054,000 for torpedo defense, $18,875,000 for five coast-defense vessels, and the remainder for the necessary earth, masonry, and armor for gun emplacements. No force exists for manning this armament, and no provision has been made for training a fit personnel. If the large sum mentioned is considered necessary for furnishing the matériel, it appears but reasonable to expend a small fraction thereof in such training. Without intelligent manipulation the costly armament would be valueless, and men can not be trained to the proper handling of powerful arms of precision, high-speed torpedo boats, and the delicate mechanism of the mine and the torpedo without long and careful instruction from competent officers.

A careful consideration of our resources and institutions and a realization of the immense addition to the strength and security of the nation to be gained by the possession of a compact, localized, naval reserve, has guided the Navy Department in deciding that a force organized, trained, and maintained as herein outlined in a general way, appears to be the most practical, economical, and efficient that can be devised.

II.

NAVAL TRAINING AND THE CHANGES INDUCED BY RECENT PROGRESS IN THE IMPLEMENTS OF NAVAL WARFARE.

By Lieut. S. A. Staunton, U. S. N.

In the following paper no attempt has been made to deal exhaustively with the subject of naval training. Professor Soley and Lieutenant-Commander Chadwick made full reports in 1879—the former upon the methods of educating naval officers in the several countries of Europe, and the latter upon the training of men in England and France. Taking that date as a point of departure, the effort has been to indicate changes and additions, and the general direction of authoritative professional opinion upon a subject that moves with the progress in weapons of war. Recurrence has sometimes been had to first principles, but only when their connection with the subject has made it necessary for clearness and continuity.

Opinions and suggestions which have as yet borne no practical fruit are freely quoted. When well considered and strongly supported they are almost invariably the means of bringing about the reforms which they advocate, and when they fail it is more often a reproach to the conservatism of service methods than a reflection upon the merits of the proposed changes. The former is frequently so stubbornly intrenched that it resists agitation for a score of years, and yields when overpowered, with slowness and reluctance.

THE TRAINING OF OFFICERS.

ENGLAND.

The general method of training and educating the line officers of the British navy is well known, and needs no more than a brief summary. The boys are entered as naval cadets at a very early age, from twelve to thirteen and a half, receive two years of schooling which is rather beyond their capacities, and which has been much condemned, and at the end of these two years pass into ordinary cruising ships, where they

acquire their practical knowledge, and at the same time continue their schooling under a naval instructor. After five years of sea service, counting that brought from the *Britannia*, and having reached the age of nineteen, the midshipman is examined in seamanship wherever he may be, and obtains, if successful, an order as acting sub-lieutenant. Upon his return to England, which takes place as soon as possible, he goes to the Royal Naval College at Greenwich for six months, and is examined in navigation and general subjects. He then goes to the gunnery training ship for a short course, at the end of which he receives his last obligatory examination while in the service. Additional future qualifications in gunnery, torpedoes, and languages are optional.

The gunnery training ship and the Royal Naval College are modern institutions; but from entry to the age of nineteen this system of educating naval officers in Great Britain is older than the century. It answered very well when professional training meant little more than a knowledge of the seamanship of spars and sails, and the scientific problems involved were few and simple; but with new demands it has been almost universally condemned, and not less heartily by the English themselves than by others. The arguments brought against it are: The too early age of admission to the *Britannia*, withdrawing boys who are still mere children from home influences and the valuable training of ordinary schools; the cramming process by which it is attempted to make them qualify sufficiently before passing to cruising ships; the failure to successfully combine midshipman and school boy during the midshipman stage; and the general lack of sequence and continuity throughout the whole six or seven years of the preparatory period. English officers who attempt serious study in their later years complain bitterly of the fragmentary and incomplete character of their early schooling.

Several committees—one in 1870, another in 1875, a third on the Royal Naval College in 1877, and a fourth in 1885, with wide instructions and discretion, of whose researches and report mention is made further on—have been appointed to inquire into this matter, bearing with such weight and importance upon modern naval development. Decided changes have uniformly been recommended, but the conservatism of an established system has so far stood out against a reorganization, the necessity of which is agreed upon by all competent to judge.

In this present year, 1888, the age of entry has been raised one year, and candidates in the future must be not less than thirteen years old nor more than fourteen and a half; but in no other essential particular has there yet been any modification.

The committee, of which Vice-Admiral Luard was chairman, was appointed in 1885. It went into the subject very thoroughly, examined many witnesses, naval officers of different grades, and instructors, and benefited by a number of papers which were submitted.

Its recommendations, although not carried into effect, are here intro-

duced, and are valuable as showing the present state of professional opinion, and the point where practical naval officers and educators think the line should be drawn between theory and practice.

Briefly the committee recommended:

(1) That the arrangements for admission to the Royal Navy should be such as to draw the material for future naval officers from the public schools of the country.

(2) That candidates should be selected at the age of fifteen by means of examinations conducted by the Oxford and Cambridge Schools Examination Board.

(3) That, after this primary selection, they should be specially instructed, still in their schools, in mathematics, elementary physics, drawing, and French or German for a term of one year.

(4) That they should then, at about the age of sixteen, undergo an examination in these subjects by the Civil-Service Commissioners.

(5) That those who successfully pass this second examination should receive appointments as cadets to the *Britannia*, which should be moored in some convenient place like the Solent or Portsmouth harbor. There should be attached to the *Britannia* for the instruction of the cadets several training brigs and a small steamer.

(6) The course in the *Britannia* should be a year in length; the instruction chiefly technical and nautical, with enough study of elementary mathematics to keep them fresh and serviceable; the discipline naval and not scholastic.

(7) At the age of seventeen the naval cadets should join sea-going ships as midshipmen and remain in them three years. Theoretical education should now cease to be compulsory; the training to be distinctly practical and professional, and to be in the hands of a lieutenant specially charged with that duty, who should have a certificate of competency from the Royal Naval College.

(8) That, upon completing this sea service, at about the age of twenty, the midshipman should be examined in seamanship, then join the Royal Naval College for examination in navigation and a four months' course in other subjects, have a month's study of machinery at Portsmouth dockyard, take the prescribed courses in torpedoes, gunnery, and pilotage, and, after satisfactory examinations, be confirmed in the rank of sub-lieutenant.

(9) That a sub-lieutenant should have two years' service as such before promotion to the rank of lieutenant, and should pass a special examination for this latter promotion.

(10) That the President of the Royal Naval College should be Director General of Naval Education with control of the whole system.

These recommendations, which the committee pressed upon the Admiralty with words of warm conviction, provide, it will be noticed, for less than two years of strictly academical training from entry as

naval cadet to promotion to a lieutenancy. Counting the one year of specially directed schooling, after selection and prior to entry, this time still remains less than three years. The training is decidedly practical and the continuous sea service is begun at as early an age as is consistent with that preliminary instruction which is indispensable. This course is intended to produce the average British naval lieutenant, sufficiently equipped for the duties of his station. Further attainment is left to individual effort and ambition, stimulated by the rewards offered by a service in which an ambitious career is possible even in time of peace. No assumption is made that all men have equal capacity and aptitude, and that fitness for high station is merely a question of training and time. No attempt is made to grind every officer through the same mill and obtain the same product. The naval service is assimilated as nearly as possible to the conditions of civil life in its recognition of the qualities for advancement; and with the same advantages and defects, the same probabilities of reward and possibilities of injustice. Of two men entering the navy at the same time, and pursuing together its preparatory training, one may be at the age of fifty an admiral commanding a squadron, and the other a commander in the coast guard; and yet the latter may have done nothing to reproach or disgrace his profession or to specially mark his unfitness for promotion. He has simply failed to show positive qualities and has not "got on" precisely as similar men in civil life fail to get on.

These considerations bear upon a feature of naval training not usually dealt with in essays, although most important to naval efficiency; viz, the training in command and responsibility. It is not a matter of schools or instructors, nor does it come in early youth; but it can not safely be postponed to middle age. It is strictly "training" in that sense of the term which excludes all mere theoretical acquirement, and it can only be accomplished by the promotion of men to the grades of command while still in the prime of physical and nervous strength, before the natural audacity of youth has been too much tempered by the hesitating judgment of age. It is a formative process like any other training; and if the first lessons of responsibility are postponed beyond the formative age they will never be thoroughly or successfully acquired. This age is taken in the English navy to be not beyond forty. Unless an officer is promoted to the grade of commander before he is forty he has little chance of further advancement; and in order to reach the grade of rear-admiral one should obtain his captaincy not later in life. This rapid promotion is brought about by a method of selection in which the claims of seniority are recognized, but are not made paramount. In the immense amount of discussion which has taken place in England upon naval reorganization and the training and education of officers, no one has attacked this method or advocated a change to advancement by seniority alone. Capt. C. A. G. Bridge, an officer well and favorably

known, in writing upon the subject in 1882, and suggesting some small changes in promotion and command, says:

In the foregoing scheme the principle of selection has been more largely recognized than is now the rule. This has been done because of the advantages believed to be due to it. But, whatever may be thought of it, it is nearly certain, nay, quite certain, that before long it will be more usually resorted to than is now the rule.

No one who has observed the recent changes in the sister service, or who discerns the temper of the times, can doubt that, whether we will or no, it will be forced upon us.

The extension of the principle of selection referred to is that of carrying it to the promotion of captains to the rank of rear-admiral.

Captain Bridge, in the same paper, recommends that the younger officers of superior grade—lieutenant-commanders (which grade he introduces) and commanders—should be assigned for brief terms to the command of large ships in the evolutionary squadrons. These periods of command, out of the ordinary roster of assignment, are suggested to serve as a higher course of special training, but there are many arguments against the proposition; and chief among them that it would deprive the captains, to a proportional extent, of the training and experience due and indispensable to their rank and responsibilities.

Another essayist of the same year quotes a commander as saying:

I am ready to fight now, and can still trust my stomach and nerves, but if I am only promoted at forty what will be the case when I am commanding my first ironclad at fifty.

And the essayist adds:

This is a question which demands attention.

The Journal of the Royal United Service Institution for 1882 contains a number of valuable essays on "The best method of providing an efficient force of officers and men for the navy," presented in competition for a prize offered by the council. All grades and ranges of service and experience were represented in the expression of opinions contained in these essays and in the discussion which followed them. Running through all the minor differences as to details, the one central opinion from which no one differed was, that the ordinary training for the young naval officer should go no further than to fit him for his ordinary and habitual duties on board ship, and that everything beyond this should be voluntary and special. To this end a boy must have sufficient intellectual training and fundamental grounding in mathematics and science, to enable him to take up with success further study or application should he elect to do so; but his time should not be occupied with mere acquisition which he might never utilize. Opportunities for special training should be ample and complete, and qualification in specialties should be rewarded, but a thorough practical knowledge of seamanship, gunnery, navigation, and one language was held to be about all that, with regard to the best interests of the service, could be made obligatory.

The opportunities for voluntary study have kept pace with the demands of the service. Besides the sub-lieutenants, whose course is obligatory, lieutenants, commanders, and captains study at Greenwich College, which in its organization, administration, and purposes is a naval university, and also in the *Excellent*, gunnery ship, and in the *Vernon*, torpedo ship. An officer, if inclined to pursue his studies, can take four separate courses at Greenwich during his career—the last as a captain. Each extension of this privilege is accompanied by certain requirements as to sea service since the last attendance.

The practical torpedo and gunnery courses are several in number, "long" or "short," more or less extended and complete, according to the classification of officers taking them. The longest and most difficult, and those requiring the greatest preliminary amount of mathematical and scientific training at the naval college, are the ones for torpedo and gunnery lieutenants, who go into the service after their training, the recognized experts and authorities in all matters relating to their specialties. A proposal was made at one time to unite these two specialties, but it has not been done. All gunnery lieutenants, however, are required to know something about torpedoes and to pass an examination in the subject.

Torpedo lieutenants have nine months at Greenwich and nine months in the *Vernon*. There are other courses for lieutenants who do not aspire to the possession of a certificate, for sub-lieutenants, and for engineer officers. A number of gunners specially qualify for torpedo work, and all other gunners take a short course.

No great length of time is spent on shore, even by these specialists. Sea service is sought and is insisted upon—is exigent, absorbing; the best officers have the greatest percentage of employed time. Men are not permitted to drift into a scholastic life and confound the means of their improvement with the end for which it is obtained. The new knowledge is speedily returned to active service afloat, to be amalgamated and utilized; to be fitted in and shaken down and become an integral part of the experience and equipment of the navy. The *Excellent* and the *Vernon* are schools of application, and maintain a practical knowledge of all improvements in the matériel. Many, if not all, of the English gunnery and torpedo lieutenants of the present day are fully up to the level of the complicated engines of war which they handle. They may not be as ready as others to deduce mathematical formulæ or discuss abstract principles of science; they may even work in some instances by rule of thumb; but they have an easy, familiar, practical knowledge of the limitations and environment of their weapons, their care, preservation, and use, which can not fail to impress an observer with a sense of readiness and efficiency.

Special tactical training has been recommended by a recent essayist, Lieut. Charles Campbell (now commander), who wrote in 1882; a course of lectures, and a flotilla of steam launches would, he thinks, answer

for this purpose. Something of this kind was done last summer at Newport, supplementing the lectures at the war college by practical exercises with the launches of the North Atlantic Squadron.

This training is of great importance. It is to some extent a matter of every-day acquirement in the experience of a sea officer; *i. e.*, every instance of getting under way or bringing to anchor, mooring or docking, manœuvering among shipping or in a narrow channel, familiarizes the commanding officer, and to a much less degree the other officers of a ship, with her qualities and capabilities. But this is not sufficient; tactics or combined action should be systematically, thoroughly, and practically taught to as many young officers as possible. The introduction of the ram and torpedo as offensive naval weapons make the thorough and exhaustive study of manœuvring and the results of position—the faculty of giving and avoiding blows—perhaps the most valuable training to a naval officer who will one day command. It is something like the thrust and parry of a swordsman, but with this additional feature, that each move has a necessary and inevitable relation to that which follows, and that the cumulative advantage or disadvantage of a number of successive moves means victory or disaster. In single ship actions these qualities will be taxed to the utmost. In a general action, where the manœuvring of a single ship must be subordinated to that of the fleet of which it forms a part, there may not be the same scope for captains; but a combat between two equally matched ships will be a combat between gladiators each with his spear and shield, in which nerve, audacity, and skill will win.

How many officers have given this subject the consideration it deserves? How many are prepared to answer if asked some such question as the following: In command of an armored battle ship in the open sea, steering east, the fog lifts and discloses an enemy of equal strength, five miles distant on your port-bow, steering south; what will you do? and from the new positions after passing, what will you do next? etc., etc., to the end of a hypothetical engagement?

The annual manœuvres recently established in European navies contribute greatly to this necessary knowledge; but in no service has it yet received the attention that it deserves.

By a recent order of the Admiralty, midshipmen are to be embarked in mastless iron-clads, where they will have no experience whatever with masts and sails. Whether or not the progress of the times demands this departure, it is certainly a noteworthy feature in the development of naval training. If, as Commander Charles Campbell, Royal Navy, says in his recent essay on the interior economy of a modern fleet, "masts and sails in a fleet-ship are simply sinful and impossible," it may be as well to give a portion of the young officers their early practical education in mastless ships. Probably a large part of their future service will be in ships which form component parts of an armored fleet.

Seamanship is still vigorously discussed in English essays; and that narrow interpretation of the art which clings to spars and sails as all essential still finds distinguished advocates. Others include more in their definition. Admiral Boys says:

Seamanship is not exactly the sailing of a ship; but the possession of the qualifications, as we understand them, of a seaman, which are certainly ready resource, strong determination, and prompt decision.

Admiral Wilson says:

A seaman is not a seaman merely because he reefs a sail or rolls a top-gallant sail. A seaman is a seaman if he is fitted to perform the duty of the ship he sails in, and, to be really a good man, he must vary with the times and the machine he has to work in.

In 1886 the importance of the French language in the examination for sub-lieutenants was doubled. It was also decided that leave on full pay for three months would be granted to any officer who wished to go abroad to perfect himself in French, Spanish, German, or Italian.

One of the prizes for scholarship, and the chief one, is rapid promotion to lieutenant. A commission as such, dated from the day of attaining six months' seniority as sub-lieutenant, is given to any sub-lieutenant who obtains first-class certificates in all subjects, and not less than 1,300 marks in the college examinations; provided he is also recommended by the President of the Royal Naval College, and has certificates of good conduct and zeal in the performance of his duties for the whole period of his service.

A special class for instruction in signaling is being formed this year (1888) on board the *Vernon*. The preliminary course is six weeks. A cipher code is to be devised for use in the service. The want of such a code was felt during the naval manœuvers of 1887.

Midshipmen must henceforth learn something of steam-engineering, not only nominally but actually. A recent circular of the admiralty requires them to obtain a practical knowledge of the fundamental principles of this branch during the last two years of their cruise. Upon examination for sub-lieutenants they must present a certificate, signed by the chief engineer and approved by the captain, that they have kept a certain number of watches in the engine and fire rooms, have a fair knowledge of the main engines and boilers of the ship, and are capable of managing the machinery of a service steam-launch.

The leading features of the system for entry and training of the engineers of the Royal Navy have not materially changed since the date of Professor Soley's report. Marine engineering is a progressive science, but not one in which sudden and radical changes occur. The advancement takes place step by step, and the training of the personnel follows the same development. Moreover, it is not isolated from all civil training, like the preparation for a purely military occupation; engineers for merchant steamers need the same acquirements as those for men-of-war.

The Broad Arrow of March 17, 1888, has the following:

The revised regulations for the future entry and training of engineer students in Her Majesty's dock-yards will not be issued for some little time, but the following alterations in the present system may be expected: Students of four years who succeed in obtaining at the final examination 65 per cent. of the total marks will be admitted into the service as acting assistant engineers. The premium will be increased from £100 to £200, payable at the rate of £40 per annum for the whole term of five years. Sons of naval and military officers who obtain nominations and are successful in passing the qualifying examinations will be admitted as students at the reduced premium of £120. A naval engineer officer is to be appointed to supervise the practical instruction of the students at Keyham, and three months' time, to count toward promotion, will be granted to those students who at the final examination pass a certain standard in practical engineering. This is a wholesome provision, as time at present is granted only for proficiency in mathematics and theory; so that, as a result, professional training and workmanship are comparatively neglected. It is calculated that forty assistant engineers per year will suffice for the wants of the navy and to repair waste. Thirty of these will be obtained by the training of engineer students in Government yards, while the other ten vacancies are to be offered to premium pupils who have served four years in a private firm, and who have also had a two years' course at well-known specified colleges, such as Owens College, University College, and King's College, London. The limit of entering for these private premium students as assistant engineers of the Royal Navy will be from twenty to twenty-three years of age. They will be required to pass an examination of the same kind as the final examination of engineer students.

The Admiralty have also resolved to abolish the existing time for students and to assimilate the uniform to that of midshipmen and cadets, the distinguishing purple stripe being retained. The training college at Keyham will be removed from the supervision of the Controller and the Admiral Superintendent of the yard. Professor Worthington will have charge of the scientific and the practical education of the students, and the college will be placed under the direct control of the lords of the Admiralty.

The London Times of January 25, 1888, says that the above synopsis of the proposed alteration has been communicated to the dock-yards by the Admiralty; therefore, it may be accepted as official. The training-ship *Marlborough*, at Portsmouth, is to be abolished, and all the students go to Keyham and will be borne on the books of the *Indus*. Students of five years who obtain half marks and upwards are to go to the Royal Naval College, Greenwich, as acting assistant engineers, and receive twelve or six months of their time for promotion, according as they obtain first or second class certificates.

The differences of opinion which prevail in England as to the class of men that should have immediate charge of the engines of men-of-war, their training and position, produces frequent changes in the personnel of the naval engineers. The tendency has been to reducé the number of officers, and increase correspondingly the number of engine-room artificers, and perhaps, at the same time, to increase the educational requirements of the former class. In November, 1882, an order in council directed that the number of engineers should be reduced to 650, and that chief engine-room artificers should be increased in number to 150. In March 1883, an Admiralty circular directed that the number of engineers should be reduced to 650, or "to such lower number as the Ad-

miralty may think fit," and that the chief engine-room artificers should be gradually increased to such higher number as might be deemed advisable.

The last order on the subject, November, 1886, prescribes the number of fleet, staff, and chief engineers as not to exceed 250 (fleet and staff engineers are recent creations, to give an increase in rank). This was an increase of 50 over the existing establishment. Engineers and assistant engineers were to be reduced to 488; a decrease of 112. The total number is greater than that allowed by previous orders in council, and greater than the number of engineers on the navy list at the present time; but less by 200 and above than the number in 1875 and before that date. The "increase of 50" and "decrease of 112" refer evidently to some previously established status not at that time represented on the navy list. The same order in council of November, 1886, increased the number of chief engine-room artificers to 250, this number to be reached by increments of 20 a year.

The following table shows the number of engineer officers, chief engine-room artificers, and engine-room artificers in the British navy at different dates from 1863 to the present time:

Date.	Engineer officers.	Chief engine-room artificers.	Engine-room artificers.
1863	1,418	.....	.....
1868	1,265	.....	90
1874	965	.....	209
1877	898	.....	393
1880	790	60	513
1883	691	92	696
1884	666	101	713
1885	677	116	830
1886	676	138	986
1887	702	158	911
1888	687	187	976

FRANCE.

Since the date of Professor Soley's report some slight changes have been made in the requisites of admission to the naval school at Brest. A circular of the present year prescribes the following:

Written examination—

(1) French composition upon a given theme, two and one-half hours.
(2) English composition without dictionary upon a given theme, one hour.
(3) Arithmetic and algebra, three and one-half hours.
(4) Descriptive geometry, one and one-half hours.
(5) Geometry and analytical geometry, three and one-half hours.
(6) Practical trigonometry, one hour.
(7) Drawing, one hour.

Oral examination, which takes place some time later, and after the results of the written examination are known—

(1) English, history, and geography.
(2) French and Latin.
(3) Geometry, descriptive geometry, analytical geometry, physics, and chemistry.
(4) Arithmetic, algebra, and trigonometry.

A reference to the report above mentioned shows that in the present programme Latin translation has been omitted from the written examination and analytical geometry has been added to it, and that the oral examination has been diminished by canceling Greek, and increased by the addition of analytical geometry, physics, and chemistry. The increasing demands for technical instruction tend to crowd out all subjects which bear merely upon general culture and are not of immediate professional usefulness. No candidates are admitted to the oral examination who have not attained a certain standard in their written papers.

Copious lists of questions, which serve as a guide to the oral examinations, are appended to the circular. They show that the standard of admission is high; much higher than would be possible in a country where the intermediate schools are not so admirably organized and maintained. To answer them fairly demands a good fundamental knowledge of the subjects to which they refer.

Although the ordinary education of French naval officers is more extensive and thorough than that of the English, they have similar special schools of gunnery and torpedoes for advanced training. This training is ample and complete. By a recent order of the Minister of Marine the course in the gunnery school ship for special officers was extended to two years. The specializing of torpedo training and service in France has fully kept pace with the development of the arm to which it applies, and reached its highest point under the administration of Admiral Aube, recently Minister of Marine, himself an ardent advocate of torpedo warfare and a believer in its efficiency.

The torpedo school for officers is now at Toulon, having been transferred to that place from Boyardville in 1886. The reasons given by the Minister of Marine (Aube) for the change were: That the Boyardville establishment no longer met the growing demands of the service; instruction could better be given in the arsenals, where were assembled all the elements of submarine defense. The school for officers was therefore placed at Toulon, the military port in which torpedo-boats are most numerous and torpedo experiments most frequent. It is called the "School of Submarine Defense." The instruction of officers is begun at this school, and is completed in the *Japon*, school ship for automobile torpedoes. The first course is five months, and there are two classes in each year. The instruction is both theoretical and practical. The officers are required to take part in trials and experiments, to assist in firing and regulating torpedoes and in dismounting and assembling them; they are also taken out for practice with torpedo-boats. The supplementary course in the school ship of automobile torpedoes is four months in length, making the total time of training nine months. Torpedo officers who have passed more than four years without service at sea in their specialty, may be returned to the school ship of automobile torpedoes for a period of four months. Their names will not be con-

tinued upon the list of torpedo officers, liable to be embarked as such, unless they satisfy this condition.

The courses of study and training are finished by examinations. An officer who, during his first five months, shows little or no aptitude for the work, is not sent to the school ship of automobile torpedoes to finish his course.

Admiral Krantz, the present Minister of Marine, differs from the conclusions of Admiral Aube respecting the best conditions of torpedo instruction; and, upon his representations, President Carnot has decreed the consolidation of the schools for officers and men, both seamen and mechanicians, into one, and its establishment under regulations which shall be-prescribed by the Minister of Marine. These new rules have not yet (June, 1888) been promulgated, and the course of instruction, as described above, is still in operation.

A number of officers are specially trained in small-arms at Lorient and are called "fusiliers."

By an order from the Ministry of Marine of September, 1887, rosters for sea service of gunnery, torpedo, and small-arm officers were established in the order of their dates of qualification as such. No officer can remain upon one of these rosters more than one year. At the end of that time, if not appointed to a ship in his specialty, he is placed upon the general roster for sea service.

Connected with the subject of training, the question of maintaining youth and vitality in the subordinate grades comes inevitably to the fore in the French navy as it does in all others after prolonged peace. A proposed law (the law of *cadres*) was reported upon by a committee of the chamber of deputies in 1887. It materially increased the number of officers, and retired lieutenants after fourteen years' service as such; but it made no radical changes in the provisions for graded retirement. Lieutenant Weyl, in a leading article in Le Yacht, criticises the bill from this point of view. He says:

I consider that to do good work in re-organization it is necessary to cut to the quick and seek to revive the youth and vitality of the grades; not temporarily by an increase in promotion, but by taking permanent and radical measures. Everybody knows that the officers of our fleet are too old, very much older than those of the English navy, because the English law is better adapted to the exigencies of the service. On the other side of the channel they retire lieutenants at forty-five, commanders at fifty, captains at fifty-five, rear-admirals at sixty, vice-admirals at sixty-five, and admirals of the fleet at seventy. In France lieutenants are retired at fifty-three, commanders at fifty-eight, captains at sixty, rear-admirals at sixty-two, vice-admirals at sixty-five.

It is evident that under such a system we must have more non-effective officers than England, because many officers, too old for their rank, are no longer able to support the fatigue of the duties incident to it. How can a man of fifty-seven do the work of second in command of a large ship? Generally he is so worn at that age that he is no longer prepared to do service so absorbing and fatiguing. Again, a lieutenant over forty is rarely a good watch officer. He does his duty, but without that zeal and ardor that he had fifteen years before. Evidence to the truth of these prop-

ositions lies in the fact that, with rare exceptions, captains of large ships select for their seconds young commanders, and prefer watch officers who have not passed their fortieth year.

Lieutenant Weyl says further:

England, with a fleet of nearly double the size of that of France, has not twice the number of officers. She can utilize her personnel better than we do because her officers are younger and better able to endure the vicissitudes of service.

In the French as in the English navy that training which qualifies for high responsibilities is secured by the promotion of comparatively young men to command and flag rank. Selection is here conducted in a slightly different manner, and has a more limited scope in the junior grades, where it is reduced to the filling of a certain proportion of the vacancies in each grade, and is modified by previous inscription upon the "table of advancement;" but it has full scope in the promotions from captain and above, where in the English navy seniority is the rule. Altogether the French system may be regarded as one of selection more completely than the English. Following are the rules of promotion to each grade in the French navy.

(1) Ensigns are made, two-thirds from midshipmen of the first class, of two years' service as such, and one-third from "auxiliary ensigns" (captains in the merchant service who have fulfilled certain conditions) and from "first masters" of the several essentially professional specialties. Any of these latter vacancies which remain unfilled from the classes to which they are assigned may be filled from midshipmen of the first class, who are in such cases chosen by selection.

The "auxiliary ensigns" hold only a titular rank. Candidates from the Polytechnic School are subject to the same examinations and compete for the vacancies with the other midshipmen of the first class.

(2) Lieutenants are made, two-thirds by seniority, one-third by selection from ensigns who have served two years at sea.

(3) Commanders are made one-half by seniority, one-half by selection from lieutenants of not less than four years' seniority and two years' service at sea.

(4) The promotion from commander to captain is entirely by selection; but commanders to be eligible must have had three years of sea service as such, of which one year must have been in command; or they must be of not less than four years seniority with two years at sea and two in command.

(5) Promotion from captain to rear-admiral is wholly by selection, subject to the following conditions of service: Three years at sea as captain in command or as chief of staff of a squadron, or four years' seniority as captain with two years' command of a division of three ships.

(6) Promotion from rear-admiral to vice-admiral is wholly by selection, the condition of service being two years at sea as rear-admiral.

Sea service as employed above means service in ships fully manned and armed for cruising or other duty. Officers in command of ships in the

first category of the reserve count half the time so employed in making up their sea time. In time of war these conditions of time are reduced to one-half the above, and in cases of promotion for distinguished gallantry or success they are ignored.

"Tables of advancement" are made each year for the grades of ensign, lieutenant, and commander by a board consisting of six flag officers, who are titular members of the Admiralty Council, the Director of the Personnel, and a captain who acts as secretary. To this board are referred the general reports, commendatory letters, and recommendations for promotion from the several commanding officers and others who are authorized to present them.

The number placed upon "the table of advancement" in each grade is limited, and is determined by adding to the known number of vacancies which will result from promotions and retirements for age in the grade above in the next eighteen months, the estimated number due to deaths, dismissals, resignations, and retirements for cause during the same period, based upon the average of such vacancies for the preceding five years. Promotions by selection are made from the officers chosen by the board whose names are inscribed upon the "tables of advancement." An officer's name is borne upon the table of his grade for three years. If he is not promoted at the end of that time his name is removed and he loses the advantage of being an eligible candidate for choice. It is, however, within the power of the board, at its annual revision of the tables, to retain him, if, in its judgment, his merits demand that consideration.

The board revises each year the names of those who remain unpromoted on the tables of the previous year. No inscriptions of less than three years' standing are removed except for specific and grave faults. The old names are placed at the head of the new tables, and the new names are arranged in the order of preference (not in that of seniority) below them. The total number of names, old and new, is determined as indicated above. In addition to those officers whose names are inscribed by this regularly constituted board, the Minister of Marine has the right to place upon the "table of advancement" the names of officers of distinguished service, either in peace or war, whose merits are, in his estimation, worthy of immediate recompense.

For captains and rear-admirals there are no "tables of advancement." The selection is absolute without restriction except as to conditions of service.

"Tables of advancement" for certain grades of staff officers are prepared in the same manner as for the junior grades in the line.

The question of the establishment of a superior school or naval university at Paris has occupied the attention of some of the most prominent officers of the French marine. The advantages urged by its advocates recall similar arguments brought forward in favor of the establishment of the Naval War College at Newport and are confirmatory of

the value of the work that that college is now doing. The following is taken from Les Tablettes des deux Charentes of September 1, 1887:

Respecting this school Mr. Gerville-Réache, a prominent deputy, has written in the République Française: "A certain number of young officers, chosen by competition, will study there important branches of the naval art and the best use of the engines of warfare which will one day be confided to them for the maritime defense and security of France. They will pass in review the nautical application of all sciences. * * * They will study the defenses and resources of the coasts, learn lessons of naval strategy, and prepare themselves for the requirements of war. Increased knowledge of living languages will lead them to future and fruitful study of the maritime organizations of foreign nations and the naval strength of the principal powers.

"Special instruction upon the external politics of France, upon maritime law, and upon the channels and volume of commerce, will enable chiefs of naval stations to sustain with more efficacy and vigor French interests, and to aid the national commerce in its competition with rivals."

Our neighbors across the channel are of the same opinion, and one of their naval journals recently said:

"If an institution like the staff college is considered necessary for the army, how much more is a similar establishment demanded for the navy? The courses at Greenwich are too elementary, and what we need is a school where naval officers can study the complete science of naval strategy; in one word, a school of naval warfare. The foundation of such an institution would be of incalculable advantage to the service."

Admiral Mouchez, the director of the observatory of Montsouris, writes:

"It is indispensable that there should be in the navy a certain number of officers of thorough scientific attainments, capable of going to the bottom of all professional questions; and this superior instruction should be given in a school at Paris. These officers should be selected from the most promising and best prepared, and should be few in number—not more than ten or twelve each year. They should form an élite of officers, destined to occupy the superior grades and special positions."

On the other hand, a "Former naval officer," "by no means convinced of the necessity for such a school," writes in the Sentinelle du Midi:

"The navy already possesses special schools of gunnery, torpedoes, musketry, seamanship, and astronomy, where an officer may perfect himself in each of the branches of his profession. These schools do not create savants, but they form excellent practical men. With what is learned there, officers are able to pursue their studies to the point of qualifying themselves to command any ship which is to form a part of our future fleet. We do not need men of large and varied acquirements merely, but men energetic and trained, knowing how to organize, navigate, and fight."

Admiral Mouchez again remarks, in the Revue Maritime:

"I am reproached with wishing to create a privileged class of officers, * * * but they would be the privileged of instruction and work, not the privileged of chance or favor. Choice is the true and fundamental basis of advancement in the service of the state, where the interest of the public must go before all private interests. The first to be promoted are in general more industrious and intelligent than the last. There are, without doubt, exceptions, but they are the exceptions which prove the rule."

Here are the same differences of opinion as to the best means of producing the best naval officer that we find in other services; but it will be noticed that here, as in England, no attempt is made to carry the body of naval officers beyond a certain standard. The specially instructed are the few whose industry and talents make such opportunities profitable to themselves and advantageous to the naval service.

The engineers of the French navy, who are styled "mechanicians," are entered and trained as enlisted boys, and serve several years as enlisted men before they can hope for a commission. Their entry and training will be described in another part of this paper. They pass in due time into the several grades of petty officers, from which they are advanced to superior grades, corresponding to our warrant officers; and from these latter grades the commissioned mechanicians are selected.

These are few in number. By a decree of March, 1877, the mechanicians, commissioned officers of the French navy, were fixed in numbers and grade as follows: Three chief mechanicians, 16 principal mechanicians, first class; 35 principal mechanicians, second class; 54 in all. In 1887 these numbers had been increased to 8, 41, and 72, respectively—a total of 121.

The principal mechanicians second class, are selected from those "first master mechanicians" (the superior grade of warrant officers), who are qualified, and who have served not less than three years at sea "in charge," *i. e.*, in charge of the machinery of a ship under 400 nominal horse-power, or as principal assistant to the commissioned mechanician in charge of the machinery of a larger ship.

The promotions to the grade of principal mechanician first class are made, half by seniority, and half by choice, from the grade below, certain prerequisites of service being essential. Promotions to chief mechanicians are entirely by selection from the principal mechanicians, first class. All the engine-room watches are kept by men corresponding in rating or grade to petty or warrant officers, and on some small ships these men are in charge of the machinery.

The "Génie Maritime," the actual professional engineers of the French navy, charged with designing and construction, do not go to sea.

A proposition made in 1887 by the minister of marine, and favorably reported by the parliamentary committee to which it was referred, fixed the number of commissioned mechanicians as follows: Two mechanician inspectors with the relative rank of captain, 12 chief mechanicians with the relative rank of commander, 50 principal mechanicians with the relative rank of lieutenant, 200 mechanicians with the relative rank of ensign. This proposition has not yet (June, 1888) become a law.

The committee did not approve the creation of a grade of assistant mechanicians to contain 350 members, ranking as officers, which was included in the proposition of the ministry. It considered that the first master mechanicians (the superior grade of warrant officers) were more desirable for the performance of the subordinate duty.

According to the proposed law, the grade of mechanician will be filled from the first master mechanicians, two-thirds by selection and one-third by seniority, subject to the passing of a satisfactory examination.

The increase within recent years of the number of commissioned mechanicians, and the proposed additional increase, are probably largely due to the greater number of torpedo-boats, and the expansion of steam

machinery, and the corresponding additions to the number of responsible posts for this class of officers. No difference is made in their training or duties, or in the source from which they come, and they still remain closely connected in line of promotion with the subordinate personnel. They are practical machinists and not professional engineers. Graduates of the Paris Polytechnic School go each year into the Génie Maritime, into the line of the navy, and even into the pay corps; but none enter the corps of mechanicians, for which a thorough practical training is deemed sufficient.

GERMANY.

Reference is again made to Professor Soley's report for ample details of the system of naval education in Germany.

Since 1883 the voluntary course for officers at the naval academy has been reduced to two years. This is entirely a higher course of study for officers who have already met all obligatory requirements, but who wish to qualify for special work.

In March, 1885, new regulations for admission to the line of the German navy went into effect. The limit of the age of admission was fixed at eighteen for all candidates.

During the first cruise of six months after entry they are called cadets. This is considered a probationary period, and at its end those cadets who have no aptitude for a sea life, or who are unsatisfactory from any cause, physical, intellectual, or moral, are discharged. The young officers after this first cruise are styled "sea-cadets." At the end of the two years' cruise (the third and fourth years of their training) those who have good reports pass the "first officers'" examination, and submit to election by their future comrades as officers.

Meeting both these requirements, they are promoted to midshipmen as vacancies occur, instead of to sub-lieutenants, as formerly.

Having qualified as midshipmen, they pursue at the naval school a course of study one year in length, and then pass for sub-lieutenants.

The programmes for all examinations are more extensive than formerly. The "first officers'" examination is practical and thorough in all professional branches, keeping pace with modern developments of warfare. By an order of the chief of the Admiralty, in 1884, this examination was divided into six principal branches, viz: Navigation, seamanship, artillery, torpedoes, steam engineering, and knowledge of the customs and regulations of the service. The requirements in the latter branch are ample and complete, including knowledge of the duties of officers in all positions: as subordinates; as deck, navigating, and gunnery officers; as first lieutenants and in command; administrative duties; enlistments; recruiting and management of men; clothing; pay; regulations respecting ceremonies, leave, sickness, complaints, and petitions; the rules of official correspondence; the form of papers and the channel through which they pass; the making out of reports and returns;

the care of stores and financial administration; general knowledge of military justice, and the constitution, jurisdiction, and procedure of military courts; general knowledge of military affairs and the relations of the army and navy.

Touching the curious feature of election, a naval officer writes as follows:

Having thus fulfilled the technical educational requirements, his (the midshipman's) name is proposed to all of the officers, of and above the grade of ensign, of the squadron in which he has served, and of the station to which the ship comes at the end of the practice cruise. To each of these officers the report of the commander of the training squadron, concerning the acquirements of the applicant is submitted; and each must communicate to the chief of the station whether or not he is willing to receive the applicant as a brother officer. Should the majority of the reports be unfavorable, the candidate is rejected. Should a minority be unfavorable, each elector so voting is called upon to give his reasons confidentially. These are transmitted to the Admiralty, where it becomes the business of the "central division" to determine the truth and gravity of the objections; and in case they are considered of sufficient weight the candidate is rejected. I was told that two or three are thus rejected each year.

This choosing of comrades has come down as a military tradition of Prussia, and is copied from the army, where an officer can not enter a regiment until accepted by his future comrades.

This principle of scrutinizing the aptitude and desirability of an officer, and those intellectual and moral qualities which can not be gauged in an examination room, is continued throughout an officer's career.

In the first instance it is applied as explained above. Subsequently no promotion of the officer is made until his superiors have submitted confidential reports upon his aptitude, merit, and professional and personal character. If these are unfavorable, his promotion is suspended or denied. These requirements are not merely nominal, but are carried out with rigor and severity. The selection and advancement of officers in the German service is influenced by no sentiment, but is based upon the highest considerations of honor and efficiency.

The most important improvements in recent years in training of the personnel, as in development of the matériel, has been in the direction of torpedo warfare.

A special torpedo corps has been organized, and a special torpedo direction or bureau has been established to take charge of all matters, including education and training, which pertain to this department. The torpedo school is at Kiel. General instruction is carried to a relatively high point. On every ship armed with torpedoes a special officer is detailed to instruct all the other officers of the ship, as well as the majority of the petty officers, in the use and management of torpedoes. Theoretical and practical instruction in submarine mines and torpedoes is given on board the cadet school-ship; and at the naval academy there is, besides the lectures on torpedo service, a special course in electricity.

Sea officers are required to profit by these several opportunities of obtaining information, and must have, according to an order of the

chief of the Admiralty in 1882, a satisfactory knowledge of the following:

(1) All classes of mines, with their appropriate electrical apparatus, conductors, and fuses, the methods of loading them and preparing them for service.

(2) The drill regulations for mines. The manipulation and proof of electric cables.

(3) Fish torpedoes and the launching apparatus which is installed in the school-ship.

(4) Practical management and care of automobile torpedo material. Regulations for torpedo exercise.

(5) General properties of gun-cotton and fulminate of mercury.

(6) Theory of the mechanism of automobile torpedoes, and all particulars respecting the methods of launching employed in the service. Torpedo ballistics.

(7) Effect of torpedoes and mines in offensive and defensive warfare. Torpedo boats.

(8) Defense and protection against mines and torpedoes.

(9) General information relating to the submarine mine and torpedo systems of the principal maritime powers.

The programmes of examinations are modified to test the knowledge indicated in the foregoing requirements.

The officers of the torpedo corps—torpedo gunners, chief torpedo gunners, torpedo sub-lieutenants and lieutenants are thoroughly trained to expert knowledge. Torpedo gunners are selected from those torpedo petty officers who have taken with credit the course of the torpedo school at Kiel. If, as torpedo gunners they obtain good certificates of conduct and testimonials of efficiency from the torpedo depots, they are eligible to promotion to chief torpedo gunner. Chief torpedo gunners, who answer all requisites of qualification and conduct (including certain social qualifications strictly demanded in Germany) may be advanced to the rank of torpedo sub-lieutenant upon passing an examination which is thorough in the subjects of torpedoes and torpedo service, electricity, mathematics, and German history. The candidate must be thoroughly informed in special technical knowledge, be grounded in practical work of all descriptions, and have had a certain amount of practical work before promotion to the grade of torpedo gunner.

There are in the German navy torpedo officers who are not sea officers; they are technical officers or experts in this special field, like the ordnance officers of the artillery. The regular naval officers, who have a torpedo specialty, are charged with the use of the torpedo as a weapon, while the officers of the corps, above referred to, are charged with the administration of all torpedo matters and serve in the depots. It is entirely a staff corps.

The torpedo engineers are classed with the mechanician engineers, and are selected from them and given special training. In the German navy the mechanician engineers (officers) are taken from the warrant officers of the mechanician personnel. The "machine building" or designing engineers, the génie maritime, are a totally different class.

In time of war volunteers as midshipmen, sub-lieutenants, and lieutenants may be taken from officers of the merchant marine who are fitted to perform the duties.

ITALY.

The limited space allotted to this paper does not permit that extended reference to naval training in Italy which the excellence of its methods and results would justify. The value of its presentation here is also somewhat diminished by the fact that much of the same ground has been covered in the description of the French and German methods. There is a maritime inscription, compulsory service, and thorough general and specialized training of both officers and men.

The naval school is at Leghorn, and the schools of gunnery and torpedoes are at Spezia. The mechanicians are trained in an industrial school at Venice, and have the same status as in the French navy. The engineers and constructors—the génie maritime—are principally taken from the graduates of the technical school at Genoa.

CONCLUSIONS.

In reviewing the training and education of officers in the several European navies, it is perceived that the tendency everywhere is to insist upon practical familiarity with the instruments of warfare, and that, while there has been a necessary advance in purely theoretical instruction, it has been by no means so marked as the progress which every officer has been required to make in personal familiarity with ships, guns, and torpedoes, and the means of handling and using them. The conditions of a blockade, of cruising in an enemy's waters, of conveying troops, of the attack and defense of ports, and of battle in the open sea, are all simulated, and the results of fire and manœuvres are carefully judged by rules of decision previously studied and laid down. The drawing up of this annual programme, with a view to accomplishing as much as possible with the money at command, is an important feature of naval administration, and is a test of the value and efficiency of the general staff. It is impossible to speak too highly of the squadrons of evolution and the annual manœuvres which have, within the last few years, become a regular part of naval training and preparation for war. They give a school of the highest character and best results for both officers and men. They prune theories, point out defects, and suggest remedies with a force and authority hitherto unknown in time of peace. When, as in England, France, and Italy in 1887, they are carried to the magnitude of illustrating grand strategic principles of national attack and defense, they convey lessons next in value to those taught by war itself.

TRAINING OF MEN.

ENGLAND.

From the peace of 1815 up to the year 1853 the ships of the English navy were manned by short-service men, who volunteered for the commission, and left when their ships were paid off. Beyond the term of their enlistment men were not bound to the service in any way, and the system provided no means for establishing reserves, or for rapidly augmenting the naval force. It was vaguely expected that in time of emergency volunteers would come forward in sufficient number. But after 1848, when the revolutionary state of Europe had indicated the necessity of being able to speedily prepare for war, it became evident to the British Admiralty that this method was inexpedient and insecure. Great difficulty was experienced in obtaining the crews of ships. The men of excellent crews, trained by a commission of three or four years, would disperse, when paid off, to other employment, sometimes taking service under a foreign flag. In 1852, the *Southampton* a fifty-gun frigate, came home to England and paid off, after a cruise of four years on the Brazil station, and considerable attention was drawn to the fact that a large proportion of the petty officers and able seamen of her fine crew had decided to quit the English navy and enter that of the United States. At that time the total number of men serving in the mercantile marine (which writers and speakers are fond of calling the "Nursery of the Navy") was stated to be nearly 250,000, yet line-of-battle ships waited three or four months before crews could be obtained for them; and smaller vessels were equipped and sent to sea only after vexatious delays. Officers were detailed for recruiting duty, rendezvous were opened, and special inducements were offered. The men did not dislike the naval service, but they liked their intervals of freedom, and the right to change and select their ships. This sense of freedom went so far as to cause some of them to think lightly of their nationality; and it was a question much debated, whether or not, in the event of hostilities, the country could be certain of their loyalty. At that time there was a positive sense of relief felt on board a ship when the complement of marines arrived from barracks and settled down to their duties, as for a considerable time they formed the backbone of the ship's company.

In 1852 the "Manning Committee" was appointed to inquire into the whole matter, and as a result of their deliberations the present system of early training and continuous service was adopted in 1853, and has now been in most successful operation for thirty-five years. The two parts of this system are closely connected, and either one would probably have failed without the other. Great difficulty was had when continuous service first went into operation to induce men to enlist for such

a long period; and if trained boys, when grown to manhood, had the option of remaining in the service or leaving it, it is evident that the expense of training would be much increased, and its efficiency diminished. But ten years' service from the age of eighteen thoroughly matures their connection with the navy; and, with half their time for a pension completed, they are not likely to surrender the advantages gained.

The report of Lieutenant-Commander Chadwick in 1879 gives full details of the class of boys that are entered as apprentices, and the manner in which they are trained. Since that time there have been a few changes, which are epitomized as follows in an Admiralty circular of 1886:

Good character is an absolute prerequisite to entry. No boy who has been in a reformatory can be accepted.

Boys must undergo a medical examination, and come up to a standard of height and chest measurement which is altered from time to time, and which is at present:

Age.	Height.		Chest.
	Ft.	*In.*	*Inches.*
15 to 15½	5	1	30½
15½ to 16	5	2	31
16 to 16½	5	3½	32¼

The necessary traveling expenses are allowed to boys who are accepted. Upon entry they sign an engagement to serve for a term of years from the age of eighteen. This term is stated in the handbills published from time to time; at present it is twelve years. Discharge by purchase can to a limited extent be obtained, with the sanction of the commanding officer and the Admiralty, before the expiration of this term, should valid reasons for the indulgence be given.

When entered in a training-ship a boy is credited with $29.20 on account of expense of clothing and bedding—which more than covers the cost. He therefore begins his naval service free from debt. The clothes in which he joins can be returned to his friends or sold for his benefit. Upon becoming a first-class boy he is granted a further clothing allowance of $12.16, making a total gratuitous outfit of $41.36.

The pay of a second-class boy is 12 cents a day, and for good conduct he can obtain an additional 6 cents a week. A first-class boy receives 14 cents a day. After one year of training (and sometimes sooner) the rating of first-class boy can be obtained. After six months' service boys can send home money to their parents and guardians as follows: Second-class boys, $1.46 a month; first-class boys, $1.94 a month.

No tobacco or liquor is allowed, but the grog-money to which a first-class boy is entitled is paid him when he leaves the training-ship.

Facilities are given for games and recreation; entertainments are pro-

vided, and the boys are taken on pleasure parties free of expense to themselves. Afternoon leave is granted twice a week, and long leave is granted three times a year, at which times they obtain return railway tickets at greatly reduced rates. Boys living at a great distance receive assistance once a year to go home.

At the age of eighteen a boy can become an ordinary seaman, and from that he passes, as soon as qualified, to the rating of A. B.

He can rise, as vacancies occur, to leading seaman, second-class petty officer, first-class petty officer, chief petty officer, and warrant officer, and may obtain a commission as chief gunner or chief boatswain.

The number of superior places open to men are:

In the navy:	Number.
Leading seamen (about)	1,100
Second-class petty officers	1,150
First-class petty officers	2,510
Chief petty officers	320
Chief gunners, chief boatswains, and warrant officers	716
In the coast guard:	
Commissioned boatmen (about)	1,350
Chief boatmen	310
Chief boatmen in charge	278
Chief officers	222

Besides about 1,460 places as boatmen.

The pay proper received in these different positions ranges from about $110 per annum for ordinary seaman to $800 for chief warrant officer. Small additions to the pay are made for good conduct, for gunnery and torpedo qualifications, and for continuance in the service after the time for pension has been completed.

Warrant officers receive extra allowances, ranging from 12 to 30 cents a day.

Besides the clothing allowance granted to boys, a gratuity of $17.03 for clothing and bedding is given to a man who re-engages after completing his first twelve years' service, and a gratuity of $121.66 is given upon promotion to warrant officer.

Leaves are granted without reduction of pay, and arrangements are made to give every man his turn of home service. An appointment in the coast guard can be obtained after about nine years' service.

Pensions are given after twenty-two years' good service from the age of eighteen, or at the age of forty; but men can remain in either the naval service or the coast guard till the age of fifty if they elect to do so, and an increase is made to the pension for this increased service. The pension ranges from $90 a year upwards. A petty officer can obtain between $250 and $300. The average for men of all ratings is about $150 a year.

Pensions are also given to the widows and orphans of men who lose their lives in service.

These details of pay and pension, although not falling under the head of training, have been given because they are so intimately connected

with it and so well arranged to contribute to the success of the system. They are admirably adapted to bind men to the service and to maintain their interest in it.

According to some British naval writers, there are disadvantages as well as advantages inherent to their present training system. An institution so vast and far-reaching in its influences as that which furnishes the personnel for a great national marine must of course be looked at from different points of view, and a final decision for or against must always be more or less a matter of balance and compromise.

These matters have been pretty thoroughly beaten out in the essays of 1882, and in others written before and after that date.

Neither the English nor the French training (which are similar) appears to produce the best physical development. Captain Brine says:

> It has been observed that boys trained at an early age, brought up and fed under either the care of the Government or of local boards, do not, as a general rule, as they grow towards manhood, compare favorably, either in physique or in capacity, with those who have been brought up under home influences or who have had, to a great extent, to rely upon their own exertions for their maintenance. Thus a very decided difference is noticeable between the young fishermen who volunteer for our second-class naval reserve and our own ordinary seamen of the same age, the former being much superior to the latter in strength, stature, and self-reliance.

While this difference is perhaps due in some degree to the difference in original stock, it is believed to be chiefly attributable to the overcrowding at night in the training-ships, and the breathing of vitiated air.

Where a number of boys are trained together from early youth, they are apt, also, to lose the habits of personal hard work, and of self-reliance, characteristic of the best type of sea-faring man.

Another criticism is that the average of British crews in age, maturity, and strength is kept below the standard of efficiency.

Over 2,000 ordinary seamen, only eighteen years of age, are sent from the training-ships annually into the navy. They are still boys, not men, some of them physically undeveloped; and a very considerable numerical percentage would have to be added to make them equal in fighting power and endurance to the older crews of the foreign navies to which they might be opposed. This is a serious practical disadvantage of too early entry. Nine thousand, or 50 per cent., of the actual seamen of the British navy are under twenty-one years of age.

On the other hand, boys who enter early are better contented to remain, and more amenable to discipline. Rear-Admiral Wilson says that when he was inspecting captain of the training-ships, the percentage of deserters and ne'er-do-weels rose in proportion to the age of entry. Among those who were over seventeen at admission, 70 per cent. deserted, but there was only 16 per cent. of desertions among those who entered under sixteen.

The enlistment of a certain proportion of "novices," that is, young untrained men from nineteen to twenty-one has been suggested to remedy the defect of a too youthful personnel. They would be trained for

a brief period, and would enjoy similar advantages of pay and pension. Their enlistment would not interfere with the training of boys, but would aid it by strengthening a weak point. The marine artillerymen, who are excellently and efficiently trained, are recruited from the agricultural classes at about the age of twenty.

In 1859 Captain Harris, who had commanded the training-ship for boys and novices, said, in his evidence before the Royal Commissioners, with reference to drills and great-gun exercise, that a young man, commencing to learn his drills at twenty, would, in the course of a year or two, be made as perfect in them as if he had commenced at fourteen. Such men were trained in the *Illustrious* in 1854–'59, and the results were favorable. It is agreed that should the two systems—the training of boys and the entry of adults—be in operation at the same time, it would be important to regulate the proportion numerically that one class of seamen should bear to the other.

Captain Bridge, while maintaining the excellence of the training system, admits that it narrows the recruiting field, because it is almost impossible for any one to serve as a blue-jacket unless he has gone through the regular course of instruction in a training-ship; and says that the navy would gain rather than lose were it possible to enlist in it some of those who, in spite of an innate capacity for a sea life, are now excluded from its service.

But if any adults are enlisted, they must not be over twenty-one; they must still be capable of training and formation into the man-of-war's-man of to-day—a quiet, temperate, industrious, skilled, and obedient man, who looks upon the navy as a career, and is equally well behaved afloat and ashore.

Men who keep abreast of their profession do not waste any time bewailing the extinction of the type of sailor that figures in Maryatt's novels, a skillful seaman and a brave man, but disliking gunnery, and possessing neither the intelligence nor the aptitude to suit the altered conditions of warfare.

Training for fighting purposes—skill in great guns, rapid-fire guns, machine-guns, small-arms, torpedoes and mines, and all the machinery, steam, pneumatic and hydraulic, connected with them—must be first and most important.

Little time is left for drill with sails and spars; and it should be considered not even as adjunct to a fighting education, but merely as a gymnasium for increasing the physical vigor of the men, improving their wind and muscle, and contributing steadiness and nerve. It has become a means only, not an end; and it should be postponed to all warlike exercises. Commander Campbell says that masts and sails are "simply sinful" and "impossible" in a fleet-ship, and Lord Charles Beresford says:

> Get rid of the ridiculous hamper and useless lumber of masts and yards, which invite an accident to your screw, and so risk losing an action you otherwise would have won to a certainty.

Drill is more important than schooling. A large part of the latter might be obtained and should be obtained before the boy is entered, but the patient systematic drill which is to fit him for his various duties can only be obtained afterwards. The better character of primary schools and the higher standard of general education make it practicable to diminish the time spent in study, and spend more in practical training. An English naval officer of high standing says "the English sailor must know now much more than the average lieutenant of thirty or forty years since;" and this increased acquirement must largely be in the way of practical skill in the management of complicated and difficult machines.

In the training of men as in that of officers the tendency is, and should be, to relieve the state as much as possible from the burden of general preparation, and to devote the time in naval schools, academies, and training-ships to technical theory and practice.

The tendency in the British service is to relegate all systematic work with spars and sails to the training ships and brigs, and give the whole time in service vessels to exercises and instruction which will be useful in time of war. After three years' service as second in command of a masted iron-clad in the Mediterranean, Commander Campbell says:

I had the conviction forced upon me that the time had come when yards, sails, and drills aloft must go, for good and all, in a fleet ship. And why? Not on account of any question as to propulsion; not because there is a predominating opinion against the necessity for this particular kind of gymnasium; not because the yards and rigging would be most frightfully in the way in action—all of these are good enough reasons in themselves—but because the whole energy and time of the officers and men of a fleet ship must be entirely devoted to the gun, ram, and torpedo; to submarine mining and subaqueous machines, and to the minor training in detail for personal attack and defense. Besides, the maintenance of the cleanliness and smart appearance of the ship and boats, owing to the increase in the cleaning area of the former, and numbers, size, and care required for the latter, together with the reduction in complement caused by the decreased numerical armament and increased facilities for loading, training, etc., has become a serious nut for the second in command to crack. If the proposed routine be carried out, and the ship kept clean and smart as an efficient fighting base, there will be plenty to employ all hands without sail drill.

This is undoubtedly the line of progress at this time. Any commanding officer who clings to the old ideas of the value and necessity of drill aloft, and enforces them in his ship, diminishes her efficiency as a fighting machine.

Mastless ships should have a gymnasium with all appliances—horizontal bars, dumb bells, clubs, weights, etc.—open to all during leisure hours. The reduction of the non-combatant classes is insisted upon. "Every seaman, stoker, and marine on board" should be trained in heavy gun, machine gun, and rifle drill, and firings, and taught something of torpedoes, signals, the compass, wheel, and lead. Place the ship upon the status of a fortress, unhampered by endless work aloft, and this can be effectively done. In connection with this point, it has been suggested to enlist artificers as marines, and draft them to ships as

part of the marine guard. It was stated in 1882 that of 1,131 British marines, enlisted and qualified during a certain time, 200 represented themselves to be artificers capable of filling ratings on board men-of-war. These qualifications might be verified at a dock-yard, and lists of the men kept, from which details to the guards of ships would be made.

The importance of special training in gunnery and torpedoes increases with the development of these factors in naval warfare. The system has undergone no radical changes since the date of Lieutenant-Commander Chadwick's report, but has moved forward on the same lines, taking account of inventions and improvements as they have matured into practicable war material. About 9,000 men have special gunnery training. The number specially trained in torpedoes is much less, probably about 2,000. The torpedo classes are drawn from the gunnery training-ships, taking for short courses in the *Vernon* and *Defiance* about 300 men a year, of whom 25 per cent. fail to qualify.

This number does not include torpedo artificers, a special class of men, who, upon qualifying as such, are highly paid; nor torpedo instructors, men of unusual intelligence and aptitude, who are retained in the school-ship for a longer time, and are sent into the service to train other men.

Complaint is made that the inducements in the way of pay and privileges are not sufficient to retain in the torpedo service the best material among the warrant officers, petty officers, and men. The skillful arrangement of increased allowances is an important feature in the organization of any voluntary training system, and success or failure may depend upon it. It is easy to get torpedo artificers to qualify, because they are well paid, and difficult to get torpedo instructors because they are not. For the rating of S. G. T. (seaman gunner torpedo-man), recently established, a gunnery course of four and a half months and a torpedo course of three months are required. At the end of each course there is an examination, and men who qualify are given first, second, and third class in this rate, according to the proficiency attained. Lieutenant Sturdee, in the prize essay, Royal United Service Institution, for 1886, questions the expediency of training the same man in both gunnery and torpedoes, holding the opinion that somewhat different qualities are needed, and that when both branches are attempted, one is likely to suffer.

The whole burden of preparation for service in their specialties is not laid upon the school-ships; it is prescribed that training and instruction on the same lines shall be continued in all ships of the fleet. The efficiency of those who have had special training is to be maintained, and all other petty officers and seamen are to be put through the course for "trained man" (T. M.), and those who obtain the standard of efficiency are to be rated as such. The best are to be encouraged to qualify themselves under the instruction of the gunnery-lieutenant for the rate of acting seaman gunner.

A feature of the present system of manning the British navy, which is universally and heartily condemned, is that of keeping men, while waiting for sea-going ships, in guard ships and hulks. They have no regular drills or occupations, and they lose in discipline and efficiency much of that which has previously been gained. It is particularly injurious to the young ordinary seamen from the training-ships, who are crowded into harbor ships for several months before they are drafted off for service. They fall into habits of idleness, and are apt, as a body, to be influenced by their worst elements.

To remedy this evil the erection of naval barracks on shore to quarter all men not employed in commissioned ships has for years been strenuously urged. It has been successfully adopted in France, Italy, Austria, and Germany. It places naval organization upon a sound military foundation, and there is no doubt of its desirability. Relieved from the cramped and unwholesome quarters of a hulk, with plenty of light, and space, and air, the men could be kept in a more healthy condition, could be occupied with drills, exercises, and police duties, and could be kept under the supervision and discipline which complete organization alone can give. The periods of reserve in the home ports would be periods of gain. Under the present system, they are periods of loss.

In many drills more can be done ashore than afloat. Captain Wilson, writing upon this subject in 1876, says:

> The want of barracks is sadly felt, for in them the seamen could be qualified properly in all their drills,* in half the time, and much more thoroughly, than when afloat, and with that exactitude which is so very essential to perfection, and which is the backbone of *real* discipline. At present there is no guarantee that, after all the care, trouble, and expense now bestowed in training our men, they will have a weapon in their hands or pass a day's drill from the time they leave the training ship until they are pensioned out of the service; for it is quite possible that a man may spend the whole of his time in troop, store, or receiving-ships, and at the end of his career be as ignorant of his drills as a ploughboy.

The same essayist defines the difference between discipline and good conduct, maintaining that the latter may be entirely dependent upon a man's high character, his good temper, and trustworthiness, and his contentment with the conditions of his service at the time; while the former is entirely the effect of military or naval organization, and depends upon its character and efficiency. It is "arrived at by attention to innumerable small details, and by a punctual and exact routine, which, afloat, the exigencies of ship life do not allow."

Thus the marine, subjected always, both afloat and ashore, to this "punctual and exact routine" is better disciplined than the blue jacket. As Commander Dawson puts it: "He has acquired some quality in the course of training which the blue jacket does not possess." There is no reason why the sailor in naval barracks should not acquire the same valuable quality, and become as essentially military in all his sentiments and impulses.

---

* All their *gunnery* drills.

After many years of agitation a beginning has been made. Whale Island, at Portsmouth, has been selected as a site, and naval barracks for officers and men under instruction in the *Excellent* are to be built. The estimate of cost is from $200,000 to $250,000, of which $50,000 is to be available in the coming financial year. They are to consist of eight uniform two-story brick blocks lying parallel to each other, each one to quarter one hundred seamen. A separate block will furnish quarters for sixty officers, who are not lodged elsewhere. Gunnery practice is now to a large extent conducted from the long battery on the harbor side of the island, and when the barracks are complete it is understood that the *Excellent* and *Calcutta* will be of no further use.

FRANCE.

Upon the continent of Europe entirely different conditions of recruiting and retaining men present themselves. The maritime inscription offers abundant material, which may be retained as long as desired for the active service or the reserve. Many difficulties arising where there are two parties to a contract are avoided. The full acceptance of the principle of compulsory service, and cheerful obedience to its practical enforcement, give to a navy a strength of personnel, in activity and reserve, probably greater than that to which any volunteer service can attain. It may also be argued that they strengthen the sentiments of patriotism; that obligations soon take upon themselves the form of duties, and that men care more for their country when they make sacrifices for her benefit. The loss of time and money is enormous, and it would be unfortunate if there were not some compensating advantages in the added qualities of discipline and obedience impressed upon the people. The application of the maritime inscription in France has been fully explained in other papers and will not be dwelt upon here.

The enlisted and petty-officer personnel of the French fleet is drawn from four classes: (1) The *inscrits maritimes;* (2) the boys trained from an early age; (3) volunteers of two categories, viz, novices and apprentices; (4) conscripts drawn for military service and assigned to the navy.

The cardinal feature of the training to which these several classes are subjected is the creation of specialties, and the personnel is organized into ten different occupations or callings, as follows:

French classification	*Free English translation.*
1. Maneuvre.	1. Professional seamen.
2. Canonnage.	2. Seamen gunners.
3. Fusiliers.	3. Small-arm men.
4. Torpilleurs.	4. Torpedo men.
5. Timonerie.	5. Helmsmen.
6. Mécaniciens.	6. Mechanicians.
7. Fourriers.	7. Clerks and writers.
8. Charpentage.	8. Carpenters.
9. Voilerie.	9. Sail-makers.
10. Calfatage.	10. Caulkers.

There are even subdivisions of the above occupations; thus among the sailors the top men are specially trained and rated as such. There also are "pilots of the fleet," not included in the above classification, who are selected and instructed for three years in coast pilotage. The specialty of torpedo man is of comparatively recent creation.

The ratings in the above specialties are assimilated and classified, and are as follows:

1. First masters, captains-at-arms.
2. Masters, sergeant-majors.
3. Second masters, sergeants-at-arms, sergeant-clerks.
4. Quartermasters, corporals-at-arms, corporal clerks.
5. Writers.
6. Seamen, first, second, and third class.
7. Novices and apprentices.
8. Boys.

The ratings of captain-at-arms, sergeant-major, sergeant-at-arms, and corporal-at-arms are given only to the men of the *fusiliers*. The captain-at-arms is the master-at-arms of the ship. The ratings of first master, master, second master, and quartermaster are common to each of the other classes. The rate of quartermaster has no special significance, as with us; a man holding it may be a helmsman, a gunner, or a mechanician. A man may be transferred from one specialty to the same rate in another specialty, provided he answers the requirements for his new duties.

It will be noticed that advancement is continuous and regular from the rating of boy to that of first master, which is next to a commission. There is no great gap between the classifications of petty and warrant officer, as in the British and American navies. This fact makes it difficult to draw the line either as to position or duty, and to say just what ratings correspond to our petty officers and what to our warrant officers. Probably the two first, first master and master, may fairly be regarded as warrant officers from our point of view.

Taking up in succession the four classes from which the men of the fleet are drawn:

(1) The *inscrits maritimes* are called into service at the age of twenty, are sent to the military port of the *arrondissement*, organized, disciplined, and trained until they are embarked in sea-going ships. Their period of obligatory service is five years in activity and two in reserve, after which they will be called upon to serve afloat only in the event of national emergency. The whole period of active service is seldom required, and they may at any time during its continuance obtain leave, renewable from time to time, to engage in the mercantile marine. Service under these circumstances in coasting vessels, small traders, and the inshore fisheries counts as service to the state.

(2) The number of boys under training is not limited, but is determined from year to year by the demand of the service. They are entered in a training-ship at Brest, between the ages of fourteen and fifteen, and remain till the age of sixteen, receiving religious, elementary, and professional instruction. The parents or guardians of a boy are obliged to give a written guarantee to refund to the state the expenses of main-

tenance and training if the boy does not, at the age of sixteen, enter into a voluntary engagement for further service in the fleet. In default of this re-imbursement he is held to compulsory service till the age of eighteen.

At the age of sixteen, having made a voluntary engagement to serve five years, the boys are sent into the service as apprentices. Those who show aptitude and fulfill the required conditions are sent to the different schools to be trained in specialties; and for specialized instruction these trained boys are preferred to the other classes from which the navy is recruited. A certain number of them are detailed to take the course in the schools of *arts et métiers* (industrial schools), to qualify as mechanicians; and while so employed they are considered as in active service and receive pay.

(3) Any boy between the ages of sixteen and twenty, qualified for enlistment, may be taken into the service for two years as a *novice*. Preference is given to those who have been trained as boys in the navy, and to those who have seen at least six months' service in mercantile or fishing vessels, either as boys or landsmen; but others, without any sea-faring experience, are accepted. Novices of a year's service as such, and having attained the age of eighteen, receive the pay of a seaman of the third class, but do not obtain the rating. At the expiration of the two years those who do not volunteer for further service are at once discharged. Novices may come from the maritime population, in which case they would naturally, upon reaching the age of twenty, be enrolled in the maritime inscription; or they may come from districts whose people are subject to military service alone. In the latter case, if the name of a novice be drawn for military service, he is enrolled among the other soldiers of his class, and may then be detailed for service in the fleet. The time that he has already accomplished as novice is not deducted from that which he owes the country as a conscript, but it counts for advancement and pension. A novice whose name is likely to be so drawn may at any time before the closing of the operations of the council of revision, *i. e.*, before the final arrangements are made for the drawing, have his name transferred definitely and permanently to the maritime inscription, thereby transferring his obligation of service wholly to the navy. Volunteers for five years enter as apprentices.

(4) Having received a large percentage of the annual contingent from the three classes already described, the navy looks to the Minister of War for the remainder, who are taken from the conscripts of the year, a proportional levy being made upon all the districts in the country. Those conscripts who draw the lowest numbers are sent to the fleet and are called men of the "*recrutement*."

They are without sea-faring experience, but are at once taken in hand at the military ports and prepared for service in the school-ships, where they have a year of instruction before final embarkation in men-of-war. An English authority says that these conscripts form about one-third

of the annual contingent. They are generally intelligent and apt, take up their naval duties with cheerfulness and industry, and are well thought of by officers of experience. Many of them are destined for the specialty of *fusiliers*, and are sent to the musketry school at Lorient for training; and after being rated as small-arm men they form part of the *compagnies de débarquement*, or landing companies, organized on shipboard. "They represent to a certain extent the non-seamen element on board the French ships, and thus are similar in many respects to our marines," writes an English Naval Officer, but they are not entirely confined to any particular specialty. Men of the *recrutement* are subject to five years' active service and four years in reserve; after which they pass into the territorial army. They may receive "renewable" leave during their active service. Trained boys, five years' volunteers, and conscripts from the *recrutement* who are not qualified for the rating of seamen of the third class are entered as apprentices. An old line-of-battle ship at Brest is kept in commission for the instruction of apprentices and novices, who receive theoretical and practical training in the specialties to which they have been assigned. Boys and apprentices forming part of the crew of a man-of-war are placed in a special squad or division, commanded by a capable and zealous officer.

The only specialties whose scope and importance have been increased by the progress of recent years are gunnery, torpedoes, small-arms, and steam engineering. Seamanship and sail-making have fallen off in importance; clerks, carpenters, and calkers are always the same, and the principles of steering remain constant, although the means of applying power may change; but in guns of all calibers and kinds, in torpedoes and mines, and in the application of steam, hydraulic, pneumatic and electrical energy, advancement has been rapid and unceasing.

The line-of-battle ship *Bretagne* at Brest is a secondary or intermediate depot of instruction, in which boys from the *Austerlitz*, novices, apprentices, and conscripts are received and given primary instruction in the several specialties, and from which they are detailed to the several special schools. It is in the *Bretagne* that the new entries of capacity and aptitude for gunnery begin their career. Conscripts intended for this occupation pass six months in this ship. The apprentice-gunners are then sent to the *Couronne* and *Saint Louis* gunnery-training ships at Toulon for a course of eight months, at the end of which they are examined and, if competent, are rated as seamen-gunners of the first or second class, the best receiving the higher rating. Seamen-gunners rated first class occupy all the positions of gun-captains in the fleet; the second-class seamen-gunners are loaders, and fill the other important numbers at the guns. During a cruise, seamen-gunners of the second class may be rated first class if they attain the required standard of knowledge and efficiency. Petty and warrant officer gunners,

after an interval of four years has elapsed since last attendance at the gunnery school, are re-admitted for a short course to refresh their knowledge and keep abreast with the progress of the art.

Men for the torpedo service are selected by a board, preferably from the *inscrits maritimes* of the arrondissement. The Direction of Submarine Defense is represented on this board. No condition of height is exacted of the candidates, but they must have robust health and good sight, must be able to read and write, and should not be more than thirty years of age. Those who have served more than eighteen months are taken only upon condition that they will complete the ordinary time of service—five years; those who are in the last year of the first period of obligatory service must re-enter for three years; and those of voluntary enlistment serving in their last year must bind themselves to re-enlist at the expiration of their time.

The number to enter the course of training each year is designated by the Minister of Marine. After selection those candidates who require it, receive preparatory instruction in the manual of arms, gymnastic exercises, and seamanship, including knowledge of the compass, of signaling and steering, making knots, bends, and splices, and of the fundamental principles of navigation and pilotage applicable to the service of torpedo-boats.

Each apprentice torpedo man receives gratuitously upon his admission to the school a copy of the Torpedo Manual. The term is five months, and the programme of instruction includes—

(1) The theoretical and practical study of the manual, with the exception of the chapter on telegraphy.

(2) The study of automobile torpedoes and the apparatus which pertain to their manipulation, charging, and launching.

(3) The description, the care, preservation, and stowage on board, and the method of using, the material of demolition for the equipment of landing parties.

(4) The preservation and manipulation of explosives, and exercises with all the engines of submarine warfare.

(5) The management of electric-light plant and of electrical apparatus for night signaling.

(6) The use of the telephone.

At the end of the course those men whose conduct and proficiency are satisfactory, are rated torpedo men. A certain number of the most capable are kept at the school for a further period of three months, to learn telegraphy and the use of telegraphic instruments, and their efficiency in this branch is indorsed upon their torpedo certificates. Upon passing the school the torpedo men are distributed to the fleet, to torpedo-boats, and to the central ships of the mobile defense, to fill vacancies.

The school of musketry (*école des apprentis fusiliers*) is at Lorient, and is established principally on shore; but two ships, the *Vengeance* and

Némésis, are attached to it, to receive the new recruits and give them preparatory instruction. The *Némésis* is rigged, but the *Vengeance* is dismasted, roofed over, and used only for quarters and for drill in bad weather. There are about five hundred recruits each year, taken from the men of the *recrutment*, the *inscrits*, and the voluntary enlistments. They are first taught rudimentary branches (as a large portion of them, especially those from Brittany, can not read), exercised aloft and in handling boats, taught a limited amount of marlinspike seamanship, and set up thoroughly. At the end of five months those who are not promising are sent back to general service, and the remainder pass into the school, and are quartered in barracks on shore.

The school is commanded by a captain who has a commander, and an officer from the marine infantry, as assistants; the former as executive officer, and the latter as instructor in tactics. The men under instruction are divided into four companies. To each company are assigned a lieutenant, two ensigns, and ten petty officers; the latter are permanent instructors.

In theory the men study the *manuel du fusilier* (small-arm manual), and are taught all details of the rifle, revolver, and Hotchkiss revolving cannon, their use, care, and repair, and everything pertaining to the ammunition belonging to them. In practice, they are taught infantry drill and target practice with the above arms. The daily routine is six hours drill and four hours study, and the course is six months in length. At the end of that time they are rated small-arm men of the first and second class, according to proficiency.

A number of officers take the course at Lorient. About a dozen ensigns are detailed each year. They have target practice with small arms twice a week; and, in addition to theoretical instruction and subcalibre firing, each has to fire fifteen shots from Hotchkiss revolving cannon, and in service afterwards six shots per annum to keep in practice.

The school is provided with an extensive drill-ground, and a range 600 meters in length. At the end of the course prizes for marksmanship are given in each category. Practical instruction is given in cantonment and field fortifications.

Warrant and petty officers of all specialties may take the course at Lorient, and receive, if qualified, a rate as infantry instructor. This special training of a large number makes the instruction general in the service. An English essayist of 1886 says that of the entire personnel of the French navy, only 5 per cent. are without some skill in the use of the rifle.

A certain number of captains-at-arms and sergeants-at-arms are sent each year to take an advanced course of rifle instruction at the firing-school of the camp of Chalons. All the warrant and petty officers of this specialty are required to go there in their turn, and they receive for proficiency a "certificate of aptitude," which qualifies them as instructors in target firing on board ship.

It has been stated that some of the boys from the *Austerlitz* enter the service as apprentice-mechanicians. Others are selected from civil life by competitive examination. The following conditions were laid down for the entries in November, 1887—the candidates to be between sixteen and eighteen years old upon the first of the following January, and to meet the requirements of—

(1) *A practical examination.*—For fitters: To fit a hexagonal key in a hollow hexagonal prism, in such a manner that the slope of the key shall fit that of the prism, no matter how it is entered, *i. e.*, no matter what faces are placed in contact; to fit a square bar; to file true all the faces of a parallelopipedon, work a mortise and fit to this mortise a rod with dove-tailed end. For smiths: To forge the crutch or two-armed brake of a pump; to forge the rudder-bands for a boat's rudder; to forge a rowlock and the head of a boat-hook. For coppersmiths: To make a boiler-cover of copper without hinges; to make a pipe elbow in two pieces, brazed and riveted; to make the brass lining for a box rowlock. For boiler-makers: To make, of ordinary plate, two ends of tubes, make a joint by placing one within the other, and rivet them; to make of thin plate a piece with the edge on one side bent in and upset, and on the other side drawn and opened out.

(2) *A written examination.*—Write from dictation as a specimen of handwriting and spelling; solve two problems in arithmetic and two in geometry; give a specimen of right-line drawing from a model, executed with rule and compass.

(3) *An oral examination.*—Exercises in French grammar and analysis; a fair knowledge of French history and some knowledge of general history; a thorough knowledge of the geography of France, and some ideas of general geography; arithmetic; the fundamental principles of geometry, plane and solid; algebra to equations of the second degree inclusive; and general ideas concerning metals, and the machinery for working them.

The foundation for future instruction and training is a good one, and the results are proportionately satisfactory. The school is established at Toulon, and the courses are from six months to one year in length, dependent upon the rating to be obtained.

Torpedo mechanicians receive special training, and under the recent administration of Admiral Aube, in 1886 and 1887, their occupation was made a specialty; but his successor has placed its status upon the old basis, and made the torpedo mechanicians a part of the corps of mechanicians of the fleet. Their special training is similar to that described above for torpedo men, with the addition of more detailed and thorough instruction in the mechanism of torpedoes, their launching tubes and other apparatus, and of compression pumps.

A certain number of seamen are taught the duties of firemen, and are divided into two classes, viz: Those who are thoroughly trained

and who receive a certificate of competency, and those who are only partially trained. The first are called "permanent seamen-firemen," and the second "auxiliary seamen-firemen." They do not lose their character of seamen, but acquire a new accomplishment. Definite contingents of each of the two classes are assigned to ships for duty in the fire-room.

GERMANY.

The system of obtaining men for the German navy is not materially different from that which exists in France.

A certain number of boys are annually entered for training, and are expected to make the navy their career, and to supply in great part the demand for petty and warrant officers. Volunteers constitute a quota, and men of obligatory service—first, those of the maritime inscription, and second, a contingent from the military conscription—fill up the naval divisions. All seafaring men are enrolled in the maritime inscription and are liable to service from the age of seventeen to that of forty-five. They are not subject to service in the army, but their naval service is based upon the military system and controlled by similar rules. They must do three years of active service, four in the reserve, and five in the seewehr, which is to the navy what the landwehr is to the army. The seewehr is composed of two classes: (1) those seamen who have done active service, (2) those men of the maritime inscription who, although liable to service, have been called out only for annual training and who therefore are not thoroughly instructed. They serve for twelve years or till the age of thirty-two in the reserve, and are then placed in the seewehr till the age of thirty-nine, when they are transferred to the landsturm. Men who have had no training are placed in the landsturm at the age of thirty-two. Men from the army conscription are called only in the event of vacancies not otherwise filled.

The boys who are entered for training are not placed upon a military footing, but are regarded as attending school.

The course is three years, sometimes extended to four in the case of dull or indolent boys, and at the end of that time they take the oath of allegiance and become a part of the naval establishment. At this period of admission proper to the naval service they are rated as *matrosen* or *ober matrosen* (seamen or leading seamen), in the sailor or dockyard divisions. Further advancement is individual.

The age of the boys at entry to the training-ship is generally between fifteen and sixteen, but those of exceptionally good physique may come younger. None, however, are taken who were more than seventeen or less than fourteen on the 1st of the preceding April. All under fourteen and one-half years of age must be at least 4 feet and 8 inches tall and measure 27 inches around the chest, with the breath expelled; all over fifteen must be 4 feet 10 inches tall and measure 28¾ inches around the chest. They must write a fairly legible hand, read fluently, and know the first four rules of arithmetic.

Boys who are candidates for the training-school are chosen by the landwehr authorities, and are examined and accepted in their military districts near their homes. After acceptance their expenses to Kiel are paid. They must bind themselves to serve for nine years after passing the school.

If a boy is discharged at the request of his parents or guardians, they must refund to the Government the cost of his maintenance, amounting to $10.80 a month for the time he has been at the school, and also his traveling expenses; but if a discharge takes place because of mental or physical incapacity, no re-imbursement is demanded.

Boys who pass from the school with an exceptionally good record are credited with two years' extra service, and have but seven remaining. Those who are turned back—*i. e.*, who require four years for the course—are not credited with the additional year, but must remain the full nine years in the service.

Volunteers are admitted for one, three, and four years. Young men from the interior districts, who have the privilege of volunteering for one year, can be entered in the sea-battalion (marines), the sailor artillery, or the artificers' detachment of the dock-yard division. One-year volunteers of seafaring experience can be entered in the sailor division or in the corps of mechanicians of the fleet.

All the one-year volunteers are obliged to pay their own expenses of outfit and maintenance. They are permitted to continue, as far as the exigencies of military service can allow, the preparation for their future callings in civil life.

Those in the marine and sailor artillery divisions are not sent to sea without their consent, and need not live in garrison.

Physicians are admitted as one-year volunteers to practice their profession.

Three and four-years volunteers are enlisted at the age of seventeen and receive thorough training.

The organization of the German navy is wholly upon a military basis. At each of the two great arsenals and naval stations there are two divisions, a sailor division and a dock-yard division. The first sailor division and the first dock-yard division are at Kiel, the second of each is at Wilhelmshafen. Each division is commanded by a captain and has a brigade organization. When not serving in commissioned ships the men live in naval barracks. The sailor divisions include the strictly military branches; the dock-yard divisions include all the men of the fleet who are artisans and non-combatants, such as firemen, mechanics, painters, and carpenters.

The dock-yard divisions are entirely different bodies from the sailor divisions, and are quartered in different barracks. They are commanded, organized, disciplined, and drilled in general duties by line officers, and receive technical instruction from mechanicians and other expert artisans. A ship and several steam-launches furnish boilers and engines for instruction and practice.

The sailor artillery is a separate branch of the German navy, and has been organized to man the coast forts, which have been turned over to the navy department.

The men of the sailor artillery are taken from all parts of the Empire, under the rules of army conscription. Special physical qualities are demanded, and the men are as big, strong, and fine looking as those of the Imperial Guard. They wear naval uniform and are drilled in all things, except seamanship, according to naval methods. As a rule they are not expected to serve aboard ship, their special duties being to man the sea-coast defenses and to form part of the torpedo personnel; but they may be sent afloat should they be needed in the fleet more than in the forts. The petty officers are mostly old sailors, and the officers are all from the line of the navy. The division of sailor artillery is composed of two parts; the first at Friedrichsort near Kiel, and the second at Wilhelmshafen. Each subdivision is commanded by a lieutenant-commander and is organized into three companies, each commanded by a lieutenant. The lieutenant-commanders are detailed to this service for five, the lieutenants for three, and the junior lieutenants and ensigns for one or two years.

The marines (*See Battalion*) are divided into two half battalions of three companies each—one at Kiel and one at Wilhelmshafen. The officers are taken from the army in a manner similar to that in which officers of the sailor artillery are taken from the navy. Changes of detail are frequently made.

Each sailor division contains two sections; and each section is commanded by a lieutenant-commander and has a battalion organization. The companies do not contain more than 250 men each and are commanded by lieutenants. Each sailor belongs during his whole period of service to the same company, and his record is kept on its rolls. When drafted for sea service, even to a foreign station, he is marked absent, and at the end of his cruise he returns to his old place.

New recruits join in the autumn, are instructed, set up, and drilled during the winter, are assigned the next summer to the school squadron, and in the ensuing year, after twelve months' training, go to cruising ships and the squadron of manœuvres. It is considered that much more is accomplished, both in training and discipline, in the commodious barracks than would be possible in receiving ships.

Schools for the men and petty officers are numerous and progressive. Very poorly educated apprentices, who fall below the usual standard demanded of applicants for admission to the training-ships, receive a six months' course of elementary instruction at the "Ship's Boys' Institute" at Friedrichsort, which is preparatory to their general training. For each sailor and dock-yard division there is a division school, intended to give elementary instruction to candidates for admission to the mechanicians', coxswains', and torpedo schools. This includes primary training in technical and professional matters. There are schools for the en-

listed men of the marines analogous to those which exist in the army. Each of these schools for the lower personnel has a small library to answer the needs of teacher and pupils, and there is a supply of boys' books for the naval-apprentice ships.

In each of the military (naval) ports there is a guard-ship which flies the flag of the commanding admiral of the station and is the headquarters of the military supervision and police of the port. In this ship the new recruits of the sailor and dock-yard divisions receive a part of their earliest professional training. It is also used for the training of the reserves, and for the instruction of certain special classes, as cooks and bakers.

The secondary or intermediate courses of training for the lower personnel is furnished by several school ships, which are:

The *Mars*, gunnery school ship.

The *Blücher*, torpedo school ship.

The mechanicians' school ship.

The volunteers' school ship.

The apprentices' school ship.

The two latter include several school ships.

In the gunnery school ship, men are trained as seamen gunners, and made practically expert in the manual and firing of guns of all calibres and classes employed in the navy. The gun captains of the fleet are selected from those seamen who have had this training. This ship is under the immediate control of the Director of Naval Artillery, and has relations with the Naval Artillery Proving Board.

The torpedo school ship takes mechanicians and sailors for training in the torpedo service. It is under the direction of the newly-created Inspection of Torpedoes, and is provided with all fittings, launching apparatus, etc., used in the German navy in ships and boats.

The guard-ship of the station is the mechanicians' school ship (unless the number to be trained is so large that it is thought best to commission a special vessel), and is fitted for the primary training of mechanician applicants (candidates for the future rating of mechanician) and firemen. The training includes a knowledge and description of engines and boilers and their dependencies, how to manage them when in operation, their care and preservation, with the corresponding theoretical instruction. The course is forty-three practice days, and the number of courses in each year depends upon the number of men to train. As a rule there are two. Men entering in March are trained for service in the squadron of evolutions, and another class is taken in the summer. If these two courses are insufficient to accommodate the men assigned for training, there may be a third in the fall and a fourth in the winter.

Each naval station has at least one volunteer school-ship in commission for the purpose of training four-years volunteers in seamanship, and one-year volunteers in gunnery and other military branches.

The object with the latter class is to qualify them up to the standard required for petty officers of the reserve.

The volunteer school-ship enters the military port about once in six months to change crews and take out new men for training. The four years men should make one, and if possible two, cruises of six months before detail to other ships. They are trained in accordance with special instructions, framed with the view of attaching them to and retaining them in the naval service.

The boys (apprentices) receive general training, partly in brigs and partly in cruising corvettes.

The final training for the lower personnel of the German navy is supplied by the *Deck Officiers Schule* (deck officers' school) at Kiel, which is subject to the control of the Director of Naval Education. This gives professional instruction to the mechanicians, helmsmen, and torpedo men, and prepares them for the required examinations. The course is from October to April.

Instruction is given to the seven following classes: (1) Class of machine under-engineers; (2) first class of mechanicians (leading mechanicians); (3) second class of mechanicians (watch-keeping mechanicians); (4) class of helmsmen; (5) class of helmsmen's mates; (6) class of torpedo men; (7) class of torpedo mates.

The above classification indicates the rating or position to which the members of each class aspire, and which they will obtain if they pass the course successfully, not that with which they enter. A good moral character and service record are requisite to admission in all cases.

The educational requirements for entry for the several classes are as follows:

(1) To possess a certificate as "good" or "satisfactory" (which have definite values and meanings) as a leading mechanician.

(2) To pass the examination for watch mechanician.

(3) To have successfully passed as mechanician's mate in the division school, or to present a certificate from a technical high school or a polytechnic school, or to pass an equivalent examination.

(4) To have passed as helmsman's mate, and to have a certificate from the commanding officer of a German war vessel showing satisfactory practical knowledge of the use of nautical instruments, especially in taking observations, and of the care of navigation stores.

Candidates for this class from among the one-year volunteers must have the permission of the chief of the Admiralty to enter it, and are sufficiently prepared if they have passed the helmsman's examination in a German state navigation school.

(5) To have passed the mathematical examination in the class of signalmen's mates in the division school, and to possess the certificate of a commanding officer that he is a fit candidate for helmsman's mate.

(6) To have passed the final examination for torpedo mate.

(7) To have passed satisfactorily through one of the division schools of the sailor artillery division, or to pass an examination equivalent in value.

Candidates for the classes of second mechanicians, helmsmen's mates, and torpedo mates must enter into an engagement to serve one year in addition to their legal or voluntary period for each period of six months under instruction.

The organization of the school is systematic and business like, the courses are thorough, and the examinations indicate an excellent standard. For each class the subjects are arranged in two or three "orders," which diminish in importance. In making up the final merit-roll, different weights or coefficients are assigned to these orders:

(1) Machine under-engineers are examined in: *First order:* Engineering,* mathematics, mechanics. *Second order:* Ship-building, German,* English.

Special importance is attached to subjects marked with an asterisk, and a certain mark must be obtained in them.

(2) Leading mechanicians must pass in: *First order:* Engineering,* mathematics,* mechanics.* *Second order:* Physics, chemistry, drawing, German. *Third order:* English, service customs, routine, etc.

(3) Watch mechanicians must pass in the same branches as leading mechanicians and in the same order, but the requirements are not so advanced.

(4) Helmsmen must pass in: *First order:* Navigation,* mathematics,* seamanship.* *Second order:* German, service customs, routine, etc. *Third order:* English.

(5) Helmsmen's mates must pass in: *First order:* Navigation,* mathematics.* *Second order:* Seamanship, German, service customs, routine, etc. *Third order:* English.

(6) Torpedo men must pass in: *First order:* Torpedoes,* mines,* service customs, routine, etc. (administrative branch*). *Second order:* Mathematics, electricity, explosives, German. *Third order:* Chemistry, service customs, routine, etc. (military branch), drawing.

(7) Torpedo mates must pass in: *First order:* Torpedoes,* mines,* service customs, routine, etc. (administrative branch). *Second order:* Mathematics, physics, German. *Third order:* Chemistry, service customs, routine, etc. (military branch), drawing.

The above, although lacking details of study, gives a general idea of the courses. It will be remembered that of the above classes only one, the machine under-engineers, receives commissions. The others are petty and warrant officers.

No branch of naval warfare has received more attention in Germany than that of torpedoes, and in no other has greater progress been made. Much of the development has been in the direction of special organization. In 1873 the whole subject of submarine offense and defense was referred to a "Torpedo Experiment and Trial Board," which was dissolved after its report had been made and its conclusions adopted. In 1876 a special torpedo personnel of line, warrant, and petty officers and engineers was organized. The school at Kiel (deck officers' school), in

which petty and warrant torpedo officers are trained, has already been described. In every ship armed with torpedoes the majority of the petty officers receive instruction in their use and management. The torpedo school-ship, the torpedo station and proving-ground, the torpedo-boats with their personnel, and the torpedo engineers, mechanicians, and electricians, are all placed under the control of the recently-created "Inspection of Torpedoes." The number of torpedo men has been recently increased, and the body has a divisional organization. The Rivista Marittima of October, 1887, says that there are two companies at Kiel and two at Wilhelmshafen, and that each company has 389 men, exclusive of officers. They furnish the crews for all ordinary and division torpedo-boats, and such contingents to the crews of ships as are needed for the management of torpedoes and explosives. One-year volunteers are permitted to serve in these companies.

The torpedo personnel is chiefly recruited from the sailor and the sailor artillery divisions. To the contingent thus obtained are added a number of fishermen and coasting sailors. The object is to create a large reserve force of specialists for working the large fleet of torpedo-boats which the Germans expect to possess for the defense of their coasts.

Those men of the regular service, *i. e.* of the sailor and sailor artillery divisions, selected to form a part of the above corps, are given an eight weeks' course at the torpedo depots, where torpedoes and torpedo material are disposed for their instruction in such manner that they shall acquire a thorough practical and technical knowledge of their future duties. Their instruction includes mine-loading and transportation, mine-laying with all electrical connections and the corresponding laboratory work, the marking and buoying of mine fields, and the management, care, and preservation of all material, including vessels, lighters, and other floating adjuncts to mine-laying. The men are graded according to their aptitude, and advancement in the torpedo service takes place by seniority, modified by further qualifications in practical work and at the torpedo school at Kiel described above.

The torpedo companies have two months' exercise each year in the mine fields, and with adjunct port defenses. Probably education in this specialty of warfare has been carried to a higher point in Germany than anywhere else in Europe. In 1887 a special appropriation of over $12,000 was made for the following exercises:

(1) Firing with revolving cannon at a target representing a torpedo-boat.

(2) Exercise of the sailor artillery with fixed batteries of automobile torpedoes (for the defense of a channel).

(3) Exercise in placing booms auxiliary to the torpedo defense, intended to stop and hold under the fire of the coast artillery, boats sweeping or creeping for mines. In order that in time of war these booms may be skillfully and rapidly put in position, it is necessary to exercise with them in time of peace.

(4) Exercise of torpedo-boats in the management of explosives, in order that they may be able to remove safely and speedily in time of war obstructions of all kinds and especially booms.

ITALY.

The Italian navy, like those of France and Germany, is mainly recruited from the maritime inscription. As in those services, a certain number of boys are under training, and these make the navy their career and supply the principal portion of the body of petty and warrant officers. They are trained in the cruising ships. The method of training boys *en masse* in special vessels has been tried in the Italian navy and abandoned. The Italian naval system is founded upon compulsory service, and differs only in details from those already described.

CONCLUSIONS.

In reviewing the above methods of training men it will be perceived that the continental systems are more elastic than that of England, and probably more thorough. While the early training of boys is a marked feature in all systems, it is not in France and Germany of the same relative importance as in England, and is not entirely depended upon, even for the supply of petty and warrant officers, who are to make the service their life-long occupation. Volunteers, men from the maritime inscription, and even conscript landsmen, have a chance to develop capacity and aptitude for the naval service and to profit by their talent and industry. By this means the field of selection is considerably enlarged.

No men, however, are taken who are beyond the age at which new ideas and new habits can be readily adopted; and it may be accepted as a cardinal principle of recruiting a naval force, that no men of mature age who have failed in other pursuits should be entered.

The difference indicated above between the methods of recruiting the navy in England and on the Continent with respect to age of entry does not result from compulsory service, nor has it any necessary connection with it.

In England or the United States volunteers of twenty or twenty-one years of age could be obtained if sufficient inducement were offered. It will cost more of course, but when all military service is voluntary the state must enter into competition with private pursuits and pay the market price for industry and capacity.

III.

TARGET PRACTICE AFLOAT.

By Lieut. C. E. Vreeland, U. S. N.

The object of this paper is to place before officers of the service such information as this Office possesses concerning the target-practice methods of foreign navies.

The official information at hand is far from complete, but it is thought to be full enough to be of interest in the cases of three of the leading naval powers, viz., England, Germany, and Italy. The regulations governing target practice are prefaced by a summary of the course of preliminary training.

A recent article in the Mémorial de l'Artillerie de la Marine explains in detail the manner of conducting target firing on board the French gunnery school ships, and also presents some interesting deductions drawn from the records of a year and a half's practice. The paper is an instructive one and is worthy of a full translation, but space will not permit the presentation here of more than a synopsis of the parts that bear directly upon the subject in hand. For the complete text the reader is referred to the publication named, Vol. XV., part 2.

Our North Atlantic Squadron system of selection and training is described at length, chiefly with a view to make its details more generally known, but also as a means of affording a present comparison with other systems. It has been in operation now over two years, and has undoubtedly resulted in the improvement of individual practice.

ENGLAND.

TRAINING.

In the English service, the men sent on board a newly commissioned ship are assumed to have acquired elsewhere a fair knowledge of great gun, rifle, and cutlass drill, and the battery training begins at once. The exercises are at first confined to clearing for action and general quarters; no individual training is attempted, and the battery is not

even divided into divisions until after the ship puts to sea. Even then it is deemed inexpedient to devote any time to the individual during the first three months, or until, by frequent divisional drills, the crew have been brought to work together steadily at the guns and have reached a fair general state of efficiency in the use of the rifle and cutlass.

Once begun, however, the system of training is made to embrace the whole ship's company. The scope of the course of instruction is illustrated by the following extracts from Admiralty regulations and manuals:

Every working petty officer and seaman, not a seaman gunner or trained man, should be put through the course of instruction for trained men, and those who attain to the required standard of efficiency should be rated; volunteers should first be taken, and then the remainder of the crew. Those already rated as trained men should be re-examined, and if found efficient should be requalified and the fact noted on their certificates; if found deficient they must again be put through the course, and if they then fail to requalify their qualifications should be removed until their turn for the training class comes again, unless they prefer to continue the course during their watch below. If any men after passing through the class are still very backward, they should be drilled by themselves one hour daily during their watch below.

The examination which the candidate for the rating of trained man must pass is briefly as follows: In ships with heavy muzzle-loading guns he must have a thorough knowledge of heavy rifled-gun exercise; in other ships he must be able to perform the duties of any number at the gun at which he is stationed; and in all cases he must have an efficient knowledge of the rifle, cutlass, and pistol exercises.

Arrangements should made for instructing ordinary seamen and boys preparatory to passing to higher ratings. First-class seaman gunners are occasionally to be employed as instructors, not only for the purpose of rendering assistance, but, also, in order that they may keep up the knowledge they have acquired in the gunnery ships.

Those petty officers and seamen, who it is thought likely would prove efficient gun captains, are to be encouraged to qualify themselves for the rating of acting seaman gunner. The candidate for this rating must be able to read and write fairly; must have a thorough knowledge of the drills of the great guns mounted in his ship, and of the rifle, pistol, and cutlass exercises; must be able to do duty in the ranks of a squad or company and be a good shot; and must be familiar with the use and application of fuses. In addition to the foregoing he must have fired ten target rounds with a "short practice" gun (7-, 9-, or 12-pounder), at ranges between 500 and 700 yards; five rounds as above from a gun mounted in a moving boat; and four rounds with full charges from a gun of not less than 4.5 tons weight, at ranges varying between 1,000 and 1,500 yards. In all these firings a certain average degree of accuracy is required, and the firing must be performed in a reasonable time. The

candidate must further qualify as a second-class rifle shot according to the rules quoted in Gen. Inf. Series, No. VI., p. 191.

Upon return home an acting seaman gunner is required to appear on board one of the gunnery ships for examination, and if successful, he is confirmed as seaman gunner.

Aiming drill should be had frequently, using at first a rifle, or a small gun laid fore and aft, and later, the broadside guns. In the latter case the gun captain uses one set of sights, and the instructor confirms the truth or error of his aim by means of the other set. A score is kept, and the results are posted for the benefit of the ship's company. This drill is invariably to be carried out before prize firing takes place.

It is recommended that special attention be given to practicing the men in judging distances over water.

TARGET PRACTICE.

General remarks.—The object of target practice with great guns should be to train officers and men in carrying out firing as nearly as possible under the same conditions as in action, and the allowance of ammunition should be made to go as far as possible in effecting this.

Circling around a target is not to be permitted, as by this means the bearing and distance remain nearly the same, and but little experience is to be gained under such circumstances. The best way to afford the most valuable exercise in the shortest time, is to manœuvre the ship about the target as nearly as possible on lines forming the four sides of a square; or, should it be desired to vary the distance still more, on the four sides of a rectangle. Under these circumstances, *i. e.*, with the bearing and distance both continually changing, it will be found best to limit the range to about 1,600 yards.

On every occasion of practice with great guns the machine guns should fire a portion of their allowance from the positions in which they would be mounted in action.

The allowance for field guns should be fired from the field carriage on shore, but if this is not practicable, it must be fired from a boat. Where there is an opportunity of firing from the field carriage on shore, six months' allowance may be expended, in which case none will be expended in the following quarter.

Short practice* should, as a rule, be carried out deliberately, the effect of each shot being pointed out to the class; if hurried over, much of its value for purposes of instruction is lost. In turret ships having guns mounted on top of the turrets, short practice is to be carried out from such guns; in other ships it will be carried on from the lightest gun on board.

* NOTE.—Short practice corresponds to our individual practice. Those instructed therein are: Men qualifying as trained men; Nos. 3, 4, 5, and 6 at the guns, if not seaman gunners; leading men not stationed at guns; any seaman gunners and any Nos. 1 and 2 that may require practice.

A recent order of the Admiralty requires that night target practice with machine and R. F. guns be had at least once in each half year. The ship is to be underway and steaming at a speed of from 6 to 8 knots. The targets are to be cross-shaped and to carry a white flag 6 feet square; when possible, they are to be anchored. The electric light may be used to discover them when beyond a 500-yard range, but not at lesser ones. The idea is to simulate the conditions of the blockade of an enemy's port, and the targets are supposed to represent so many torpedo-boats.

Night practice with great guns is also provided for; the target in this case is of regulation pattern and is illuminated as much as possible by the rays of the ship's lights.

Electric firing.—In each vessel fitted with electric firing-gear at least two commissioned officers of the line, one of whom should be a lieutenant, are to be thoroughly instructed in its use and made competent to carry out electric firing from the director. The names of these officers are to be inserted in the half-yearly reports of progress in gunnery and torpedo practice.

Two armorers or artificers are to be specially instructed in the manner of repairing the wires when damaged and are to be stationed in the battery at general quarters for this duty. A small box, for the use of these men, is fitted upon each side of the battery and contains short pieces of india-rubber tubing, india-rubber tape and solution, binding screws, pliers, twine, short lengths of insulated wire fitted with binding screws and tubing for temporarily bridging over breaks in the main wires, spare branch wires complete, and, at general quarters, spare boxes of electric gun tubes.

The following specific orders regulate the manner of conducting electric target-firing exercises:

(1) In all ships fitted with electric firing apparatus the guns are to be fired at a target by electricity every quarter except that in which competitive prize firing is had.

(2) One broadside is to be fired from each side, the firing being done from the director, and, in addition, each of the officers mentioned above as being competent to carry out electric firing from the director is to fire at least two rounds from single guns in the same manner as in broadside firing.

(3) Battering charges and Palliser shot are to be used in all ships to which they are supplied.

(4) Electric firing from the director is to be carried out in the following manner: The guns being concentrated on any given bearing, the ship is to be manœuvred under steam at a speed of not less than 8 knots, the course being occasionally altered so as to imitate the probable circumstances of an actual engagement. The officer at the director is to be informed of any such change of course, and he should also be kept informed of the distance of the target.

He should endeavor to deliver the first broadside as soon as it will

be effective; this will, as a rule, be within 800 yards range. The subsequent broadside and single shots may be fired on the same or a different bearing, as the captain directs. No attempt should be made to pass the target at the exact distance for which the guns are concentrated.

(5) Two officers with sextants should be stationed aloft, one to observe the exact distance of the target at the moment of firing, the other the distance from the ship at which the shot fall; the distance right or left of the target at which the shot strike should also be recorded. In the case of broadside firing, the distance should be taken from the point where the bulk of the broadside falls, and the lateral and longitudinal dispersion should be estimated as closely as possible by the eye.

(6) A full report of these firings is to be inserted in the half-yearly report of progress in gunnery, the following points being especially recorded: (*a*) Bearing and distance for which the guns were laid. (*b*) Actual distance of the ship from the target when the fire was delivered. (*c*) Distance from the target—right, left, short, or over, at which the shot struck the water. (*d*) In the case of broadside firing, the area covered by the shot. (*e*) Motion of ship at time of firing. (*f*) Speed of ship at time of firing. (*g*) Name of the firing officer. (*h*) Details as to number of miss fires, defects of apparatus, etc.

PRIZE FIRING.

Prize firing takes place annually at one of the established ranges, by order of the commander-in-chief of the station, who will select the most suitable time for carrying it out.

The competition is between guns of the same nature in each ship, and not between the different ships. The firing is executed by Nos. 1 and 2 only, and with ports open.

The actual expenditure of ammunition is not fixed, the excess or deficiency with respect to one quarter's allowance being rectified in the total expenditure up to the end of the following quarter. One nature of charge and projectile is used throughout.

The target is 40 feet long by 15 feet high, and is made of old canvas. If erected on shore, it is marked out in the most convenient manner; if afloat, it is supported on a raft constructed in accordance with the drawing shown in the plate.

A steaming base is marked out by three buoys, placed parallel to the length of the target and 800 yards apart, the middle buoy being 1,400 yards from the target's centre. (See cut on next page.)

The ship steams along this base at a speed of 8 knots, and in order that a large gun may have an opportunity of firing (approximately) the same number of rounds as a small one, the ship steams over the range twice when firing with guns of above 6.5 tons weight.

The method of procedure is as follows: The distance at which firing will begin having been communicated to the battery, the competing gun is trained on the bow and brought to the ready. The order "com-

ELEVATION.

PLATE 1.

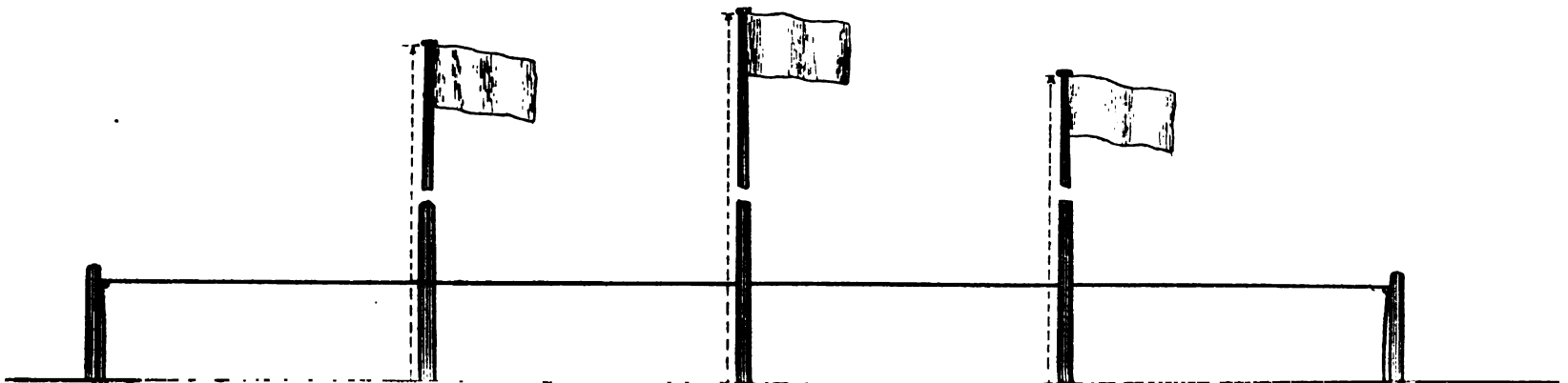

a. Fir Balk 13½" x 18½" forming the Keel of the Target.

b. Fir Cross pieces 6½" x 9½" bolted to the Keel by two nut and screw bolts.

c. Fir Balks 15" x 15" bolted to the Cross pieces by two bolts nutted at both top and bottom.

d. Fir planks 12" x 4" bolted to "b" by two nut and screw bolts.

e. Oak planks 12" x 4½" bolted to "c" by two nut and screw bolts.

f. Cleats 2'-0" long for mooring Target.

mence" is given as the ship passes the first buoy; on passing the second buoy, No. 1 falls out by order, as if disabled, and No. 2 takes his place; on passing the third buoy the order "cease firing" is given. In the case of heavy guns, No. 1 will fire during the whole of one run and No. 2 during the whole of another.

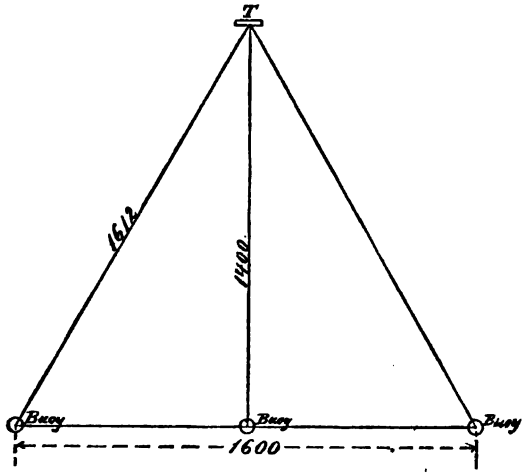

Only actual hits are scored.

According to statements made by British naval officers it is no uncommon thing in their service for gun captains to fire 6 to 8 shot from an 8-inch rifle in the course of the 1,600-yard run,* and to put them all in the target; the 6-inch gun has been fired 46 times in 38 minutes, with a resulting figure of merit of 83 per cent.

These figures are excellent, but a consideration of the size of the target and the conditions under which the practice is made will show that they are by no means extraordinary. The ship steers a straight course at a uniform rate of speed; the deflection leaf when once adjusted needs, therefore, no alteration during the run. The range varies between 1,400 and a little over 1,600 yards; the target is 15 feet high. Now with the 6- or 8-inch B. L. R. an error of 100 yards in the estimated range at a distance of 1,500 yards deflects the point of impact in the vertical plane about 7 feet, so that, by setting the sight-bar for 1,500 yards, and directing the line of sight upon the top of the target at the maximum and upon the base at the minimum range, it is possible to place all the shots near the horizontal centre line of the target. An error of train of nearly a quarter of a degree would not deflect the shot laterally more than half the target's breadth.

The table on the next page shows the amount of money actually awarded as prizes to each sea-going and first-reserve ship, and, also, the proportional amount formerly received by each number in the successful guns' crews. This system is obsolete; the prizes are now

*The time of making the run should be a little less than six minutes.

awarded to the best gun's crew of each different description of gun in the ship, and the manner of apportionment is left entirely to the discretion of the commanding officer. The total amount, however, remains as shown in the exhibit:

Prizes awarded annually to sea-going and first-reserve ships for excellence in prize target-firing.

SEA-GOING SHIPS IN COMMISSION.

Armament.	Annual prizes allowed in proportion to armament.		Proportional amount awarded to each man of gun's crew.			
	Total number.	Class of prize.	No. 1.	No. 2.	Nos. 3, 4, 5, and 6, each.	Remainder of gun's crew, each.
			£ s. d.	£ s. d.	£ s. d.	£ s. d.
Eighteen heavy rifled guns, and above that number.	3	First ...	2 10 0	1 5 0	10 0	5 0
		Second..	1 10 0	15 0	7 6	4 0
		Third...	16 0	8 0	4 0	2 6
Under 18 heavy rifled guns, and not less than 10.	2	First ...	2 0 0	1 0 0	8 0	4 6
		Second..	1 0 0	10 0	6 0	3 9
Under 10 heavy rifled guns, and not less than 4, except turret ships mounting guns of 10-inch or higher calibre.	1	.....	1 10 0	15 0	7 6	4 0

FIRST-RESERVE SHIPS IN COMMISSION.

Ten heavy rifled guns, and over that number.	2	First ...	2 0 0	1 0 0	8 6	4 6
		Second..	1 0 0	10 0	6 0	3 0
Under 10 heavy rifled guns, and not less than 4.	1	.....	1 10 0	15 0	7 6	4 0

Rifled guns of 4.5 tons and upwards are called heavy guns; of less weight, light guns.

In vessels having a mixed armament of heavy and light rifled guns, each light revolving gun is to be considered, with regard to the prizes, as a heavy gun, for the reason that it is worked by a full gun's crew.

Each pair of light broadside guns is to be considered as only one heavy gun.

In turret vessels carrying 4 guns of 10-inch or higher calibre a prize will be awarded as follows:

	£ s. d.
Captain of the turret	2 0 0
Numbers 1 and 2 (each)	1 0 0
Numbers 3 and 4 (each)	8 0
The rest of the gun's crew inside the turret, at the running in and out winches, and at the ammunition hoist (each)	4 0

Quarterly allowance of ammunition per gun.

CHARGES.

Nature of gun.	With projectiles.			Blank.		Boat or field guns.	Short practice.
	Battering.	Full.	Reduced.	Full.	Reduced.		
B. L. (new type):							
For each 6-inch gun and above	2	6	.....	2	.....	8 charges for each.	20 charges and projectiles for every 100 and fraction of 100 in the complement.
For each 5-inch gun	.....	1	7	.....	2		
For each 4-inch gun	.....	8	.....	2	.....		
M. L. R.:							
For each traversing and each broadside gun of 4.5 tons and upwards	2	6	.....	2	.....		
For 64-pounder	.....	8	.....	.....	2		
B. L. guns (old type)	.....	8	.....	2	.....		
S. B. 24- and 12-pounder howitzers	.....	4	.....	.....	.....		

Quarterly allowance of ammunition per gun—Continued.

PROJECTILES.

Nature of gun.	Allowance for each gun.				Exceptional projectiles.†				Boat or field gun, R. M. L.
	Common shell.		Battering shell, filled.	Shot.*	Shell, filled.			Case shot.	
	Filled.	Empty.			Double.	Shrapnel.	Segment.		
B. L. (new type):									
6-inch and larger calibres	1	6	1	.....	‡1	‡1	.....	1	
5-inch	1	7	.....	.....	.....	1	.....	1	
4-inch	2	4	.....	.....	.....	§1	.....	§1	
M. L. R.:									
8-inch and larger calibres	1	3	1	3	.....	1	.....	1	40 common shells, filled. 4 common shells, empty. 1 Shapnel shell, filled. 1 case shot.
7-inch	1	3	1	3	1	1	.....	1	
6½ pounder	1	7	.....	.....	.....	1	.....	1	
R. L. (old type)	1	5	.....	.....	.....	.....	§1	§1	
S. B. 24- and 12-pounder howitzers	.....	.....	.....	.....	.....	.....	.....	§4	

* If no Palliser shot, empty Palliser shell to be fired.
† To be fired in lieu of an equal number of shot or empty shell in the proportion of one of each for four guns.
‡ Special allowance for 80-ton guns mounted in turrets.
§ Not to be considered "exceptional," being the actual allowance for each gun.
NOTE.—The ammunition expended for qualifying men as acting seamen gunners is in excess of the allowance shown in the tables.

Fuzes: Time or percussion may be used.
Machine guns: Nordenfelt, 60 rounds for each gun; 0.65-inch Gatling, 200 rounds for each gun; 0.45-inch Gatling and Gardner, 500 rounds for each gun. Morris' tube, 20 rounds per man per quarter.

FRANCE.

GUNNERY-SHIP TARGET PRACTICE.

The target exercises executed on board the school-ships *Couronne* and *St. Louis* take place in Hyères Roads, and embrace firings of two sorts, viz.:

(*a*) Firing from an anchor upon a target mounted on shore.
(*b*) Firing while under way upon a target anchored in the roads.

(*a*) The practice is executed with guns of 14-, 16-, 19-, 24-, and 27-centimetre calibre, all of the 1870 model.

The targets are formed of canvas stretched over two skeleton spheres mounted one above the other upon an upright stanchion, one end of which is firmly buried in the ground. The general arrangement and the dimensions of the parts are shown in Fig. 2 in the accompanying plate.

Six such targets are disposed in a straight line at right angles to the line of fire and at intervals of 10 metres (see Fig. 1), and the firing takes place upon each in succession until all are destroyed.

The range varies from 1,350 to 1,450 metres, the variations being due to the influence of wind and tide upon the ship.

The persons appointed to observe the fall of the projectiles are stationed on board ship, and, knowing the exact height of the targets and the distance between them, it becomes an easy matter to estimate accurately the errors in range and direction.

The shots are assigned values as follows: 20 points for shots striking the centre of the target; 19–18 points for shots falling within a circle of 3 metres radius; 17–16–15 points for shots comprised between circles of 3 and 6 metres radius; 14–13–12 points for shots comprised between circles of 6 and 9 metres radius; 11–10 points for shots falling without the circle of 9 metres radius. The normal merit mark corresponding to these different areas is augmented by a half point for good line and over shots; it remains unchanged if the shot be a good line and short, and it is diminished by a half point if the shot err in both range and direction. These modifications are left entirely to the judgment of the observers.

The average merit obtained in this firing is represented by 17 to 17.5; the rapidity of fire is one shot per 2 minutes.

The following table, indicating the number of rounds per calibre allowed for instruction in the use of the heavier guns, will give an idea of the scale upon which the practice is conducted:

Allowance to be expended during a course of instruction continuing through four months.

27-centimetre:		
Service rounds	38	
Exercise rounds	112	
Total		150
24-centimetre:		
Service rounds	70	
Exercise rounds	180	
Total		250
19-centimetre:		
Service rounds	120	
Exercise rounds	240	
Total		360
16-centimetre:		
Service rounds	100	
Exercise rounds	200	
Total		300
Grand total		1,060

A careful record of the firing is kept, but the system of points before described appears to obtain only with the 14-centimetre practice.

(*b*) This firing is generally executed with the sixteen 14-centimetre guns mounted, eight on a side, on the upper deck of the *Couronne*.

The target is a canvas sphere secured to a stanchion which rises about 2 metres above the surface of the water, and which further serves for the determination from the ship, by means of a telemetre, of the distance of the target. The stanchion passes through and is fast-

Fig. 1.

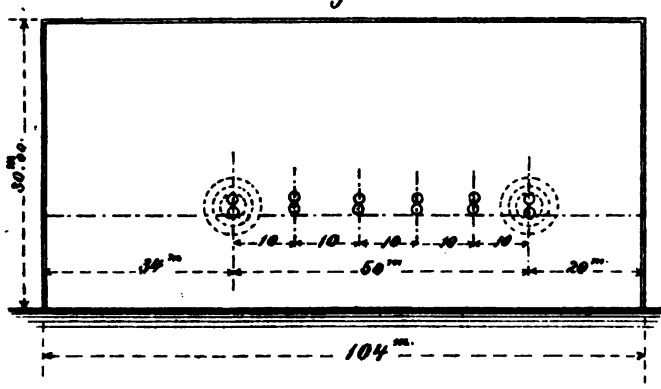

Fig. 2.

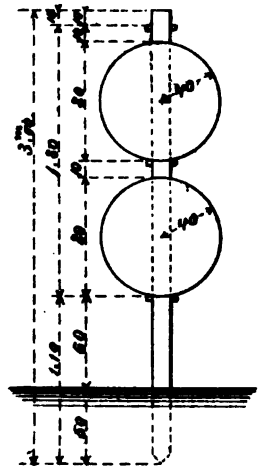

Fig. 3.

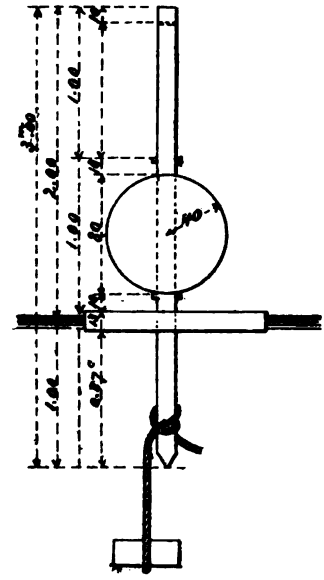

ened to a floating platform ballasted with a pig of iron (see Fig. 3). Six such targets are aligned on a given bearing at intervals from each other of about 500 metres. The ship steams around them at a speed of from 5 to 6 knots, completing about 8 kilometres at each circuit, and maintaining a uniform distance throughout any one firing, although the distance may vary from 600 to 1,200 metres at different firings.

The maximum train of the guns is 35°, both forward of and abaft the beam. The moment any one target enters the field of fire, the officer of the deck communicates its distance to the officer in charge of the battery. The latter directs the gun captains to set the sight-bars for a mean distance between that indicated by the officer of the deck and that the target will have when bearing exactly abeam, and cautions them to direct their line of sight upon a certain point of the target, thus avoiding the loss of time due to frequent changes of the position of the bar.

This mode of procedure is rendered both practical and accurate by the construction of a table which shows at a glance what reduction to make in the actual distance as communicated by the officer of the deck, and also the point of the target at which to aim for each 3 degrees of train.

Such a table computed for the 14-centimetre gun, is annexed:

Distance given by the officer of the deck.	Distance for which sight-bar is set.	Aim at the top of the stanchion when the target bears forward of the beam.	Aim at the top of the sphere when the target bears forward of the beam.	Aim at the centre of the sphere when the target bears forward of the beam.
Metres.	*Metres.*	°	°	°
800	700	24	16	10
730	650	27	19	13
670	600	30	21	15
610	550	33	23	17
550	500	.....	26	18

Aim at the bottom of the sphere when the target bears abeam.

Three observers are employed to note the falls; one in the bow of the ship, one at the stern, and a third aloft.

The scale of merit is the same as that adopted in the (*a*) fire, but the manner of awarding points differs.

It will readily be seen that, owing to the large mean errors of the 14-centimetre gun, the piece may be accurately pointed and its shot still fall wide of the target. These errors, with the 21-kilogram projectile, are—

	Vertical.	Lateral.
	Metre.	*Metre.*
At 500 metres.....	0.21	0.19
At 1,200 metres.....	0.66	0.47

If we admit the extreme errors to be triple the mean, the dimensions of the theoretic rectangle containing all the shots will be—

	Vertical.	Lateral.
At 500 metres	1.26 metres + 1 calibre	1.14 metres + 1 calibre.
At 1,200 metres	3.96 metres + 1 calibre	2.82 metres + 1 calibre.

All shots striking within the rectangle corresponding to a given range are judged "very good," and are awarded, probably, 19 or 19.5 points. Twenty points are allowed only for actual hits. The merit assigned to other shots is in accordance with the scheme previously described.

The average merit is 17 to 17.5, the same as in the (*a*) practice. The rapidity of fire is not stated.

Competitive firing.—In addition to the two classes of firing above described, and in which all under instruction take part, there is a competitive target practice in which only the most skillful participate, each one of the competitors in turn acting as gun captain, and the others assisting in the service of the piece.

The firing is conducted from an anchorage upon targets similar to those used in the (*b*) fire. The gun employed is the 14-centimetre; weight of projectile, 28 kilograms. The mean range is about 1,200 metres; maximum, 1,500 metres.

The fall of the projectiles is observed by officers in boats stationed to the right and left of the line of fire and about 500 metres distant from the target.

The mean errors of the 14-centimetre gun, firing a projectile of 28 kilograms at a range of 1,200 metres, are—

	Metres.
Longitudinal	20
Lateral	0.60

Assuming as before that the extreme errors are triple the mean, the dimensions of the rectangle containing all the shots will be—

	Metres.
Longitudinal	120
Lateral	3.60

The probable errors are—

	Metres.
Longitudinal	17
Lateral	0.50

The angle of fall corresponding to the given range is 2° 50′, of which the tangent is about .05; consequently any shot passing through the plane of the target at the height of its centre (.5 metre) will fall about 10 metres beyond it.

If a shot strike the target it receives the maximum, 20 points; if the elevation be very good and the lateral error be less than 2 metres the

shot counts 19 or 19.5. For greater lateral errors 1 point is deducted for each 2 metres of such error. Any shot falling within 17 metres in front or rear of the theoretic point of mean impact is considered "very good" in range; any shot falling within 60 metres in front or rear of the point of mean impact is considered "good" in range, and is awarded 18 points if the lateral error do not exceed 2 metres. All shots whose error in range exceeds the extreme error of the piece receive at most 16 points, and this figure is diminished in proportion to the vertical as well as the lateral errors according to the rule already laid down.

The degree of merit obtained in this practice is 19 to 19.5; rapidity of fire, one shot per 30 to 40 seconds. The corresponding figures in the ordinary fire, it will be remembered, are 17 to 17.5, and 2 minutes.

It will be noticed that the basis upon which values are assigned in the competitive differs from that employed in the (*b*) fire. In the former case the dimensions of the theoretic target are the mean, in the latter the extreme errors of the piece. This is explained by the fact that in the competitive firing that piece is chosen which trial has proved to be the best; and, further, the exact range is always determined by a series of trial shots.

The subjoined table exhibits the total annual allowance of ammunition, one-third being expended during each four months' course of instruction:

Allowance.	Calibre of gun.
3,000 to 3,300 rounds	16 to 27-cm.
21,000 rounds	14-cm.
3,000 rounds	10-cm.
900 to 1,200 rounds	90-mm.
900 to 1,200 rounds	65-mm.
30,000 rounds (Hotchkiss revolving cannon)	37-and 47-mm.

The 10-centimetre and 90-millimetre allowances are chiefly expended under way.

The 65-millimetre boat gun is landed, and the firing is executed from the beach upon a target anchored in the roads; the range varies from 1,000 to 1,200 metres.

DISCUSSION OF RESULTS.

The results obtained in all the target firings executed between June, 1884, and the close of 1886 are given in detail, and from these details a table is constructed which indicates in a general way the degree of excellence obtained with each calibre. The results are expressed in per cent. of actual hits, and in order that we may draw any correct inferences relative to the influence of the diverse agents that so greatly modify the accuracy of fire at sea it is essential to know the per cent. of probable hits.

This may readily be computed by means of a table of probability factors used in connection with the firing tables.

To facilitate comparison between the true and the theoretic per cent., the fire is assumed to have been directed in the case of the (*a*) firing upon a vertical rectangle 2 metres in height by 1 metre in width, and in all other fires upon a vertical square whose sides measure 1 metre.

Certain modifications in the actual per cent. are made to compensate for differences between the real and assumed target areas, so that the figures in the two appended columns may be accepted as representing very nearly true ratios:

Kind of fire.	Calibres employed.	Mean actual.	Theoretic.
		Per cent.	*Per cent.*
(*a*) At 1,400 metres..	27-cm., 1870 model.....	15–16	26
	24-cm., 1870 model.....	15–16	23
	19-cm., 1870 model.....	12–13	24
	16-cm., 1870 model.....	8– 9	22
	14-cm., 1870 model.....	4	22
	10-cm., 1875 model.....	4	22
(*b*) At 750 metres....	14-cm., 1870 model.....	2	43
	10-cm., 1875 model.....	2	56

The three principal causes of inaccuracy of fire at sea are conceded to be: (1) Error in estimated distance of target; (2) speed of ship and target; (3) movements of the gun platform (rolling and pitching).

(1) In the school-ship practice there can be no difficulty in obtaining the exact range of the targets mounted on shore.

In the fire while under way the ranges are always short, the course around the line of the targets is always defined in advance, and the distance therefrom is maintained as uniformly as possible. As each target comes within the field of fire its distance is determined by means of a Lugeol telemeter, and the determinations are stated to be accurate.

This possible factor of error may be dismissed, then, as having no bearing upon the loss of accuracy shown in the tables.

(2) In the fire under way the speed of the target is practically *nil*, the displacement due to the action of wind and tide being so slight that it may safely be neglected. This being the case, the performances of the 14-centimetre gun afford us a direct means of estimating the loss due to firing from a platform moving across the line of fire; for the practice under way and from an anchor are executed under average similar conditions of wind and sea, and, as demonstrated above, at equally well-known ranges.

In the fire from an anchor at a range of 1,400 metres, the average per cent. of hits is 4.

In the fire under way at a 750-metre range, the ship moving at a speed of from 5 to 6 knots, the average is 2 per cent.

The targets vary in area as 2 is to 1.

Now it can be shown that the 4 per cent. at a 1,400-metre range is equivalent to about 7 per cent. at a 750-metre range with a target of the lesser area; whence it appears that the accuracy of fire is decreased in

the ratio of 3.5 to 1 solely by reason of the fact that the firing takes place from a moving platform.

(3) Of all the adverse influences tending to affect the accuracy of fire at sea, the movements of the gun platform are doubtless the most important.

The Manuel du Marin-Canonnier prescribes that in a sea way the elevation shall be so adjusted that the line of sight will bear upon the object when the ship is on an even keel, or midway between the extremes of the roll. Now it is just in this position that the velocity of movement is greatest, and the angular displacement is such that, even in a moderate roll of 5 degrees each way, if no allowance be made for it, the resulting vertical error will be many times the mean error of the piece. For a roll of 10 to 13 degrees, at a moderately long range, it will exceed the height of a ship's side above the water-line.

Corrections corresponding to various angles of roll and different ranges may be calculated and duly applied, but notwithstanding such compensation there is bound to be in practice more or less uncertainty in range. It requires the skill of a trained gunner to keep the eye constantly ranging along the proper points of the sights, and in a sea way this skill must be seconded by a quick brain and a hand prompt to obey its impulse.

Similar tables may be computed to compensate for pitching, although the effects of this motion may in general be neglected in comparison with those due to roll.

In the case of the 14-centimetre gun, the reduction of per cent., or, in other words, of accuracy, due to the speed of the ship, has been shown to be in the ratio of 3.5 to 1. There remains a reduction of from 43 per cent. to 7 per cent., which is as yet unexplained, but which may be stated to be due to all other sources of error; and it is estimated, although it is not demonstrated, that a reduction in the ratio of 5 to 1, or a reduction of more than 25 per cent., is due solely to the rolling and pitching motions of the *Couronne*.

TARGET PRACTICE OF THE FRENCH SQUADRON OF EVOLUTION, MARCH, 1886.

The information necessary to a proper understanding of the following discussion will be found in Gen. Inf. Series No. V., p. 20.

The total number of shots fired against the *Armide* was 625; number of hits 145, or 23 per cent.

In order to follow out the methods pursued in treating the schoolship results, *i. e.*, in order to determine the ratio of the theoretic to the actual per cent. of accuracy, the writer assumes that the 27-centimetre gun represents the mean effectiveness of the combined armament and supposes the firing to have been carried out at 3,500 metres range.

The angle of fall of the 27-centimetre gun at this distance is about 12°, and the *Armide's* beam, 15 metres, will be approximately repre-

sented by a vertical height of 2.4 metres, which added to the height above water-line gives a total height of 8.4 metres. The length of the *Armide* is about 80 metres.

The mean errors of the piece corresponding to the supposed range are—

	Metres.
Vertical	5.6
Lateral	1.8

Owing to the large lateral dimensions of the target, we may assume the per cent. of hits to be that which would obtain against a vertical zone 8.4 metres high and of indefinite breadth. This is represented by 44, which is to the actual per cent. about as 2 is to 1.

The excellence of the results in the *Armide* practice is owing principally to the large dimensions of the target, but at the same time it is believed to be due, in some measure, to the use of guns of large calibre, to the great stability of the ships composing the squadron, and finally to the professional skill of the gun-captains, who are generally picked men. The results also indicate a favorable state of the sea.

The target was practically a fixed one. The considerable number of shots having a lateral error approaching 40 metres renders it probable that had the *Armide* been moving at a speed equal to that maintained by the squadron the number of hits would have been lessened very materially. At 3,500 metres the time of flight of the projectile is from 10 to 12 seconds, and an error in the estimated speed of the target of 1.5 knots, it is computed, would have lost 40 to 50 shots, or the actual percentage of hits would have been reduced to about 16, and the ratio of the theoretic to the actual accuracy to about $\frac{1}{2.7}$.

It is believed that a ratio very similar to this, say $\frac{1}{2.5}$, will obtain in actual battle, at ranges of from 3 to 4 kilometres, with guns of large calibre mounted on modern armored ships, under favorable condition of sea. With guns of small calibre the ratio is fixed at $\frac{1}{6}$.

The reductions that may result from a rough state of sea can not be precisely indicated, but they will undoubtedly be very great. The ratios in the case of the 27-centimetre guns mounted on board the *Couronne*, a fairly stable vessel, vary on different dates from $\frac{1}{2.5}$ to $\frac{1}{20}$, and even to $\frac{1}{\infty}$, and the variations are attributed in most part to the more or less favorable state of the sea.

GERMANY.

The matter relating to training and target practice in the German navy is taken from the Instruktion über die Schiessübungen, 1883.

PRELIMINARY TRAINING.

In order that the allowance of ammunition for target practice may be productive of the greatest possible good it is enjoined upon command-

ing and other officers to strive to prepare the men for firing under service conditions by careful instruction in the aiming drills. Exercise with the Baden aiming target, the covered sight scale, and the exercise gun must go hand in hand with the manual drill of the great guns.

After the guns' crews as a whole are fairly grounded in these exercises, the Nos. 1 and 2 are to be put through a special and more complete course of instruction, in which, later, a few other gun-numbers may be included.

The firing of Nos. 1 and 2 with the exercise gun begins at a range of 30 metres, which after a time is increased to 50, and finally to 80 metres. When a certain merit figure in this practice has been reached, the exercise is varied by causing the firing to be done from a boat in a rough sea, or from the ship's deck against a target suspended from the yard-arm when the ship has considerable motion.

In every exercise designed to develop the capabilities of Nos. 1 and 2, a fixed standard of proficiency is adopted, and it is expected that they will be able to meet its requirements in every case before the end of the first year of commission; they must do so before the first target firing of the second year or their numbers will be replaced by other men.

As soon as the commanding officer is satisfied that the guns' crews are grounded in the principles of all the preliminary exercises, and that Nos. 1 and 2 especially understand thoroughly the duties of their offices, he may proceed to exercise his crew at target practice. The results of the practice will serve to show whether or not the preliminary training has been faithfully carried out, in what respects the system is deficient, and what further instruction is required.

By a conscientious and skillful use of the time at his disposal, it will be possible for the commanding officer to proceed with target practice by the end of the first half year in commission; he *must* proceed with it before the end of the second half year.

TARGETS.

The regulation target is made of wooden battens and measures 8 metres in width by 5 metres in height. The distance between the battens should not exceed one-half the calibre of the smallest gun taking part in the practice. The battens are whitewashed on both sides, and in their centre is painted a black port measuring 2 metres square, which is bounded at top and bottom by a black riband .5 metres broad, extending the whole width of the target. The target is towed into position on a float, which, during the firing, may be anchored, towed, or allowed to drift.

In cases where this target is too large to be conveniently handled, and in battle practice, it is replaced by a four-sided pyramid, whose base measures 3.5 metres and whose height is 3 metres. In the centre of each face is painted a black port 1 metre square.

Where the conditions are favorable to so doing, 6 to 8 buoys may be anchored around the above-described pyramidal target in a circle of

25 metres radius, to aid in the determination of the fall of the shots. Shot falling within the circle and not on the pyramid are scored as "conditional" hits.

The target for "school" practice with the exercise gun is made of battens, measures 2.5 metres square, and bears a black port 1 metre square in its centre. The distance between battens should not exceed 2 centimetres.

TARGET PRACTICE.

Target practice is of three kinds, viz.:

I. School practice.

II. Exercise practice.

III. Battle practice.

II. and III. must be carried out with the ship under way. It is desirable that I, also, should be carried out while under way, but when this is not practicable it may be executed from an anchor. In this case the target should be towed at a speed not exceeding 5 knots.

School practice.—Five rounds of 3.7-centimetre ammunition, to be fired from the exercise gun, are allowed to each crew exclusive of boat gun and R. C.* crews. The ship moves either across the line of fire or in it.

a. Across the line of fire.

(1) The ship steaming 5 knots, Nos. 1 and 2 fire 1 round each at an anchored or drifting target, at 200 to 400 metres range.

(2) At the same speed, No. 1 fires 1 round at 500 to 800 metres range.

(3) At 7 to 8 knots speed, No. 1 fires 1 round at 200 to 400 metres range.

(4) At 9 to 12 knots speed, No. 1 fires 1 round at 500 to 800 metres range.

b. Fire with bow and stern chasers. The ship steaming directly towards or away from the target, the firing is executed by the numbers, and at the ranges and speeds indicated in *a.*

In the school practice distance buoys may be laid out to assist in the determination of the distance.

c. The remaining 3 rounds of the allowance for the first year in commission are expended at the discretion of the commanding officer.

Exercise practice.—Four rounds of exercise and 1 round of fighting ammunition per gun, including boat guns, will be expended as follows:

a. The ship steaming across the line of fire.

(1) Speed, 5 knots; course, parallel to target; Nos. 1 and 2 fire 1 round each at from 500 to 1,000 metres range.

(2) Speed, 5 knots; ship slowly alters course from time to time; No. 1 fires 1 round at 400 to 600 metres range.

(3) Speed, 7 knots; course, parallel to target; No. 1 fires 1 round with loaded shell at 600 to 800 metres range.

(4) Speed, 8 knots; ship slowly alters course from time to time; No. 1 fires 1 round at 700 to 1,000 metres range.

b. Fire with bow and stern chasers. The ship steams directly towards or away from the target.

(1) Speed, 5 knots; No. 1 fires 2 rounds (one with loaded shell), and No. 2, 1 round at 300 to 1,200 metres range.

(2) Speed, 7 knots; No. 1 fires 1 round at 300 to 1,200 metres range.

(3) Speed, 10 knots; No. 1 fires 1 round at 300 to 1,200 metres range.

* R. C.—Revolving cannon.

In this practice changes of course are to be avoided as much as possible. No distance buoys are laid out.

Exercise practice with boat guns on landing carriages.—Where a convenient landing place on the beach is found, and firing seaward is possible, the practice will be made against an anchored target at a range of from 900 to 1,500 metres. Or, if the beach offers the necessary facilities, the target may be set up on shore. In this case the range is not to be communicated to the marksmen, but is to be determined by observations of the fall of the projectiles. No. 1 fires 4 rounds, of which 1 is with loaded shell, and No. 2, 1 round.

If no suitable place on shore presents itself, the firing will be done from the ship against an anchored target. The gun, in all cases, will be mounted on its field carriage.

Battle practice.—The allowance for this exercise is 4 rounds of exercise amunition per gun, besides 2 additional rounds for each gun mounted on side sponsons. Of this allowance 2 rounds per gun will be expended in broadside firing.

The ship will invariably be cleared for action. The object of battle practice is to accustom the men to serve their guns and deliver their fire under circumstances resembling as closely as possible those of actual battle; and it is recommended that this object be fully explained to the gun crews, expecially to all Nos. 1 and 2.

In case of vessels acting singly, the manœuvring and firing will be so conducted as to resemble a battle of ship against ship. In the case of a squadron, the engagement will represent one of opposing squadrons.

The further details are left to the judgment of the officer in command.

Battle practice with boat guns.—Four rounds of exercise ammunition per gun are allowed.

The boats of the ship or squadron, as the case may be, will be called away "armed and equipped," and they will manœuvre against anchored or drifting targets.

Each No. 1 will fire 2 rounds at 300 metres, and 2 rounds at 500 metres range.

Sharpshooters, marines, and riflemen.—The sharpshooters, at both exercise and battle practice, will take their regular stations as if in battle and await orders.

At the order "commence firing," each man will proceed to fire his allowance (8 rounds of ball cartridge at exercise, and 16 rounds at battle practice) against one or more small-arm targets, which will be anchored near, or made fast to, the great-gun target.

In battle practice the marines and riflemen will be called away three different times during the exercise, and at each order "commence firing" will fire 2 rounds against the small-arm targets.

ALLOWANCE OF AMMUNITION.

Each ship and vessel is allowed for the first year of commission—(1) Eight rounds of exercise ammunition per gun, including boat-guns, as follows: For guns of 21-centimetre calibre and upwards, 4 chilled and 4 common shell; for guns of 15- and 17-centimetre calibre, 2 chilled and 6 common shell; for all other calibres, 8 common shell.

Vessels not carrying the 3.7-centimetre exercise gun are allowed 13 rounds per gun instead of 8.

Chilled shell will be used in all broadside firing.

(2) One round of fighting ammunition per gun, the shell to be completely fused.

(3) For each side sponson gun in both broadside, 2 additional rounds of exercise ammunition, with chilled shell. To be expended in broadside firing.

Vessels carrying less than 6 guns will not practice broadside firing.

(4) Ten rounds of 3.7-centimetre exercise ammunition to each crew, exclusive of boat-gun and R. C. crews.

(5) Five saluting charges per gun, including boat-guns. This allowance will be expended at clear-ship exercises, or at boat or landing manœuvres.

(6) A liberal allowance of percussion and friction primers, to be expended in preliminary exercises.

For each succeeding year of commission—(1) Five rounds of fighting ammunition per gun, including boat-guns, as follows: For guns of 21-centimetre calibre and upwards, 3 chilled and 2 common shell; for guns of 15- and 17-centimetre calibre, 1 chilled and 4 common shell; for all other calibres, 5 common shell.

(2) For each side sponson gun of 15-centimetre calibre and upwards in both broadsides, 2 additional rounds of battle ammunition. Allowed only to ships carrying 6 or more guns.

(3) Ten rounds of 3.7-centimetre exercise ammunition to each crew, exclusive of boat-gun and R. C. crews.

ALLOWANCE FOR OFFICERS.

First year of commission.—Three rounds of 3.7-centimetre exercise ammunition to each line officer, exclusive of supernumeraries, of and below the grade of lieutenant-commander (Kapitänlieutenant). This allowance will be expended in carrying out exercises 2, 3, and 4 under "school" practice.

For each succeeding year in commission.—Two rounds of 3.7-centimetre exercise ammunition to each officer, exclusive etc. To be expended in carrying out exercises 3 and 4 under "exercise" practice.

ITALY.

TRAINING.

The trained artillerymen of the Italian navy are *graduati cannonieri* (gunners, gunners mates, and corporals) and *cannonieri*, or seamen gunners. The latter are not petty officers.

The artillery school-ship *Maria Adelaide* is an old wooden frigate, permanently moored in the Bay of Spezia. Her practice battery consists of 15-centimetre and 12-centimetre guns on Albini carriages, and a number of machine guns. She has, in addition to the regular complement, 12 other officers, viz., 4 lieutenants, 4 sub lieutenants, and 4 midshipmen, whose sole duty is to organize and instruct the school.

After the annual maritime conscription takes place, and the conscripts are assembled at the headquarters of the different departments, qualified officers are sent to select the most intelligent among them for instruction in gunnery and torpedoes. About one-third are thus chosen, of which number 450 are sent on board the gunnery ship in the April following. When the class arrives on board the *Maria Adelaide*, it is organized into four divisions, and each division into four platoons. Each division is commanded by a lieutenant, with a sublieutenant and a midshipman as subordinates, and to each platoon are assigned three rated gunnery instructors, viz., a gunner (first-class), a petty officer, and a corporal.

The regular course is six months; at the end of that time all who pass a competent examination become second-class seamen gunners. A certain number of those showing sufficient capacity are retained for a further course of three months, and at its end become first-class seamen gunners. After a certain time spent in cruising ships, the first-class seamen gunners, or a part of them, return to the *Maria Adelaide* for a third term of instruction, and upon its completion become corporal gunners, an intermediate rate between seaman and petty officer.

No man can become a corporal without passing through these three courses, and no corporal can be promoted to gunner's mate and third-class gunner without taking a new course of instruction for each step.

Third-class gunners may be advanced successively to second- and first-class gunners by selection.

For exercises with heavy guns, the class is taken aboard different ships in reserve or *disponibilità* in the port of Spezia, and for heavy gun target practice these ships go outside. One form of exercise is to send two ships out, each towing a target; both ships then manœuvre, and each fires at the other's target. Of course, strict and carefully considered rules are laid down to avoid accident.

The school of distance is an exercise at determining the distance of a

ship or boat by the time that sound requires in passing. A boat moves to an unknown distance from the ship, where the men under instruction are assembled, and at a given signal a gun is fired from it. The men see the smoke, wait for the report, and give their estimates of the distance. The boat then moves on to a new position, and the exercise is repeated. The degree of accuracy is noted by the instructor, who measures the distance with a telemeter. Full records are kept, and at the end of the course prizes are awarded to those who have made the best scores.

GENERAL DIRECTIONS FOR TARGET FIRING.

The commanding officer of every ship in commission is required to exercise his crew at artillery firing according to the following instructions, taking advantage of all favorable occasions that present themselves during the cruise. It is especially ordered that this most important instruction shall be conducted with the greatest care, and without undue haste. To this end the quarterly target firing shall be divided among several days, employing as much time as can profitably be used. If good weather be lacking in which to complete the allowance, the expenditure of the remainder may be carried over to the next quarter, or may be omitted altogether.

Allowance for quarterly firing.—(1) The quarterly allowance of ammunition for target firing to each ship in commission is as follows:

	Rounds with heaviest or only charge.	Rounds with second or third charge.
Each gun of calibre above 300 mm	1	5
Each gun of calibre from 200 to 300 mm	2	10
Each gun of calibre from 100 to 200 mm	2	15
Each gun of calibre below 100 mm	20	.....

For each rapid-fire gun, the same allowance as for the ordinary gun of equal calibre.

For each revolving cannon, double the allowance of the ordinary gun of equal calibre.

For each machine gun, twenty rounds per barrel.

For pieces of small calibre, so connected with large guns as to command the same fields of fire and to represent them in tactical movements (the guns mounted on the turret tops of the *Duilio* and *Dandalo* are examples), the allowance is unlimited.

These allowances shall preferably be expended at a number of different exercises, and in such a manner that continuous and progressive instruction may be given.

(2) It is within the discretion of commanding officers to exceed the above allowances by 20 per cent. whenever they consider it expedient and desirable to do so; but this discretion does not apply to the heaviest charges of guns having more than one weight of charge.

(3) For great guns provided with shell or shrapnel, about one-fourth of the practice shall be with shell or shrapnel loaded; the remainder shall be with unloaded shell or armor-piercing projectiles of cast-iron, preferring always those of old model and those unfit for use in action, if such exist.

For revolving cannon and rapid-fire and machine guns, the most economical ammunition shall be used.

(4) It is absolutely forbidden to expend any ammunition for target firing after the quantity on board has been reduced to one-half the original allowance.

CLASSIFICATION OF FIRINGS.

(*a*) *Firing from an anchor.*—To be executed with all classes of guns. It should be considered as a preliminary exercise for the purpose of instruction in pointing. Only the guns that take part in the fire shall be manned, but these shall include in their crews all the gunnery personnel.

(*b*) *Fire of precision.*—To be executed with the ship in motion and cleared for action. The firing of the great guns shall be done by the gun captains; that of the smaller pieces by all the gunnery personnel.

(*c*) *Prepared fire (tiri preparati) with the great guns.*—To be executed with the ship in motion, cleared for action, and all officers and men at quarters for battle.

(*d*) *Prepared fire with small artillery.*—Especially intended for the practical instruction of officers; it is to be executed with the ship in motion, only such pieces being manned as take part in the firing. The watch officers in turn shall have the direction of the fire, and the junior officers in turn shall determine the distance of the target.

(*e*) *Rapid fire with light artillery and machine guns.*—To be executed with the ship stopped or in motion against a movable target, with a view to imitate defense against torpedo boats. The distance and the direction of the target shall be rapidly changed by the movement of either the ship or target, the latter being towed by a tug.

(*f*) *Firing with boat and landing guns.*—To be executed with boats "armed and equipped," and with landing parties composed of completely-organized guns' crews.

RULES FOR FIRING WHILE UNDER WAY.

Firing while under way shall, circumstances permitting, be combined with tactical movements. The targets, towed by ships of the same squadron, can represent an enemy's force against which the other ships

manœuvre. There will thus be presented the first phases of a naval combat; and the officers and crews of the squadron, placed under circumstances identical with those of a real action, will have an opportunity to become familiar with the movements of vessels and the simultaneous use of all the various engines of warfare.

Fire of precision.—This fire will be conducted against a target fixed on shore or at sea, at distances between 600 and 2,000 metres. The ship will maintain only sufficient speed to steer well and keep her guns bearing on the target. The officer in command of the battery will impress upon the gun captains the necessity of pointing with the greatest care and deliberation, and of restraining their fire until sure of their aim; but this requirement is not to diminish the celerity of loading and working the piece. The distance will be transmitted to the battery as often as necessary, and the determinations of the instruments are to be checked by the fall of the projectiles. Pains must be taken in the registration of the shots; should doubt or confusion occur, the firing must cease until the record is corrected.

This firing shall sometimes be carried out in a sea sufficiently rough to give the ship a motion of both rolling and pitching.

Prepared fire.—In order to accustom the gun captains to certain kinds of firing, which represent the cases most likely to occur in actual combat, and to give the officers experience in the use of the director and in determining the most favorable times and circumstances for firing, there will be executed as explained below: (1) Firing against a fixed target; (2) firing against a target in motion.

(1) There are two different modes of procedure, viz.: Bringing the target into the field of fire by "rapid approach," and bringing the guns to bear on the target by passing in front of it. These two methods may be used alternately or in combination, according to convenience. The firing must always be executed at full speed.

The method of rapid approach is best conducted as follows:

The target in position and the necessary instructions given to the battery, the ship heads for the target at full speed from the direction best suited to a free field of fire. At a distance of 1,000 metres the helm is put hard over, and the ship makes a complete circle of evolution, bringing the target into the field of fire of each gun in succession. Successive or broadside firing may be used at discretion. The circle terminated and the battery reloaded, the same evolution is performed again, so manœuvring the ship as to preserve as nearly as possible the same bearing and distance from the target as before.

In the second method three targets are established on a straight line, and not less than 800 metres apart; the ship, at full speed, steers a sinuous course, such, for example, as will leave the first target on the right hand, the second on the left hand, and the third again on the right. The commanding officer may employ successive or simultaneous parallel or converging fire, using electricity or not, according to the state

of the sea. He should not fail to take advantage of any opportunity that may offer to use his bow and stern guns.

(2) This fire is accomplished by towing the target in a direction opposite and parallel to that in which the ship is heading, and at a range varying from 200 to 1,000 metres. The tow-line should be at least 100 metres long. Appropriate signals are established to indicate to the towing vessel when to change course and the manner of changing it, and to regulate the speed. The firing vessel will also manœuvre, changing course when she has passed beyond the target. The distance from each other will be measured by both the ship and the tug; and the latter will signal it at the end of each run in order to check and correct the ranges for which the guns are laid. Due account shall be taken of the force and the direction of the wind, and the manœuvres shall be so conducted that the firing ship may not remain too long in the smoke of her own guns.

FIRE WITH BOAT GUNS.

The fire from boats shall be executed while the boats are fully armed and equipped, manned by their regular crews as prescribed by the "boat bill," and commanded by their own officers. The firing shall be done by the captains of pieces. The target, as a rule, shall be placed on shore; but failing a suitable locality, it may be set out at sea in the usual manner. The distances shall be from 400 to 1,000 metres, and they should not at first be made known to the firing party, but should be determined from the boat by the best means at hand, or estimated by the eye and corrected by the fall of the shot. The boat may be anchored or kept underway, and in both cases the bow is held pointed toward the target by the use of steam or oars.

FIRE WITH LANDING GUNS ON FIELD CARRIAGES.

The guns shall be mounted and commanded as prescribed by the ordnance regulations. The target may be placed either on shore or afloat, as may be most convenient; in all cases it shall be of the form and size prescribed. The distance shall be from 600 to 2,200 metres and is not to be accurately measured, but is to be determined as in the fire with boat guns. The firing shall be executed by the captains of pieces, who, under the circumstances, should become accustomed to the rapid correction of the range by means of the elevating screw. While using shell and shrapnel it is important to observe where they burst, in order that the fuses may be properly regulated.

As a rule, the conditions of this fire should be considered as those against uncovered troops, and the shell or shrapnel should burst at a height of 2 or 3 metres above and a distance of 30 or 40 metres in front of the target. It is considered better, when possible, to have a special target for these projectiles.

UNITED STATES.

The regulations governing drills and target practice in the Navy are contained in the Ordnance Instructions, and need not here be quoted.

NORTH ATLANTIC SQUADRON TRAINING SYSTEM.

The system adopted in the North Atlantic Squadron of selecting and training great-gun captains consists of—(1) Small-arm target practice for the whole ship's company; (2) the selection from among those who excel in this exercise of four times as many men as there are guns; (3) the further selection from this number, by causing the competitors to sight and fire small arms according to methods closely resembling those employed with great guns, of two men for each gun in the ship; (4) the substitution of weekly sub-calibre practice in lieu of the great gun drill usually held.

The following details of the system are compiled from a pamphlet of instructions issued to commanding officers of vessels of the squadron, and various squadron orders:

The idea contained in section (3) is carried out by mounting a shoulder rifle on a suitable block or carriage on the ship's rail, the pointing and firing being executed at the full length of the lock lanyard. The firing may, with advantage, take place in a moderate seaway, the ship being at anchor. To simulate the conditions of varying train the use of two targets is suggested, the fire to be directed upon each in alternation.

The tests should include one for quick sighting, and the system of assigning weight to this and to good shooting may be as follows: Anchor at 100 yards from the ship a raft showing a canvas screen 9 feet high and 3 feet wide, and on this screen draw central rectangles measuring 3 by 1 and 6 by 2 feet. Assign 9 points to shots falling within the smallest rectangle, 3 points to shots falling without this and within the 6 by 2 rectangle, and one point to all other shots on the screen. Allow to each man, on as many different days, three to five trials of three minutes each; count the number of shots he fires and his score, and let his final score be the number of shots fired plus five times the number of points made.

Throughout the practice the marksman should be told where to set the sight notch. The object is to select men who can put their shots together; it is not to teach the men to judge distance.

In addition to these it is very important to have a class of men that shall be able to use shoulder rifles effectively at any distance less than 1,000 yards. The tactics of these men should be like those of skirmishers on shore; they should be taught to take cover, use a rest, etc., and the officer commanding them should devise a system of drill which would enable him to control his division to advantage, and to direct its fire upon any point indicated by the captain.

The sub-calibre practice is executed with a rifle barrel rigidly se-

cured to the gun, either on the outside or in the bore. After the barrel has been fixed in position it is necessary only to fire a few shots with it, using the gun-sights, to have it in all respects ready for work. The gun captain should be required to stand back at the end of the lock lanyard and to use the gun-sights in all cases. Wooden sights, the exact counterparts of the regulation patterns, but with a sliding leaf provided, should be fitted to each gun; or it might be an advantage, in view of the difficulty of obtaining a perfectly non-yielding attachment, to secure to the barrel wooden blocks having the same profile as the gun-sights, and thus do away with the necessity for absolute rigidity.

The foregoing exercises are preparatory to the training of the battery as a whole, although it is not meant that no battery practice shall take place until the individual practice is complete.

In the training of the battery some preliminary sub-calibre practice should be had to insure to the officers of the ship the control of the fire. The great-gun practice should at first take place with gun and target stationary; later, the ship may move in any direction in or near the triangle formed by the target and the two observers' boats. Another method—a very good one when the ships are in squadron—consists in one of the vessels towing a target, against which one of her consorts manœuvres and fires.

The battery training should also include the employment of the sharpshooters already referred to.

TARGET DIAGRAMS.

To observe the fall of projectiles the squadron has adopted an instrument commonly called a T, and shown in the accompanying sketch. It can readily be made aboard ship and is sufficiently accurate to serve all practical purposes.

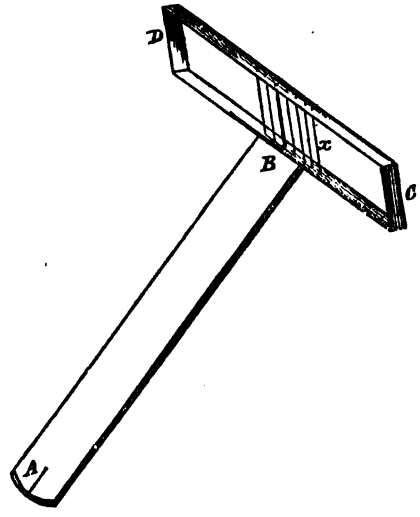

The rod A B is 36 inches long, and in it, at A, is inserted a pin which is held in a vertical position when the instrument is in use. The open rectangular frame C D, mounted at right angles to A B, is about 22 inches long and 2 inches high, and is strung with wires subtending successive angles of one-half a degree at the point A.

Then the pin being held close to the eye, and the line of sight being directed upon the target across the centre wire of the frame, if a shot is observed to fall on the line x, for example, it is known that it fell 2° to the right of the target.

The record of the practice of a single gun is obtained by placing two observers, each provided with one of the above-described T's, in such positions relative to the target that they will get a right-angled cut on it. The actual position of the observers is, perhaps, not very important; if, as is usually the case, it is desired to measure as accurately as may be the side and range errors considered separately, it is probably best to place one directly over the gun and the other abreast of the target. When the ship is moving about the target, however, it will be necessary to have both observers anchored off in boats, but still in such positions that they will get the right-angled cut.

If several guns are firing there must be a third observer stationed on board ship to note the name of the firer; and the two T observers, in addition to recording the fall of the shot, must also note its number.

It is important during the individual firing with great guns to watch as closely as possible the behavior of the ammunition, and, owing to the deliberate character of this practice, this can be done by the addition of only a few observers. For time-fuse projectiles three extra observers are required (making six in all); one abreast the target to note the position of the burst in range, another stationed near the gun and provided with a watch to record the time of burning of the fuse, and a third, also stationed near the gun, to note as closely as possible any delay in the action of the primer or charge. With percussion shell the total number required would be but five.

It is the custom to place the observers at distances from the target of 1,000 or 2,000 yards, and always on lines making a right angle at the target, so that it becomes an easy matter to plot after the following method: From the points representing the observers' positions, draw lines on a sheet of paper at angles from each other of .5°, to correspond to the angles subtended by the wires in the T, the zero line in all cases passing through the target; then the position of any one shot on the paper will be at the intersection of the lines, subtending angles at the target corresponding to those recorded by the T observers. Using a scale of 1 inch equal to 40 yards, sheets measuring 15 inches by 3 inches will suffice to show all but exceptionally wild shots. The lines are drawn in ink, and, the points of fall with the name of the firer being always put in in pencil, the sheets may be used a large number of times. The record may be taken off on tracing-paper, and the tracing posted for the benefit of those concerned.

The above applies to the plotting of practice when the gun and target are stationary; the points of fall will, of course, be more spread out when the ship is moving, and, after plotting on the sheets of drawing-paper, sheets of tracing linen about 15 inches square will be required to show all the shots. These sheets, it must be observed, are not a very good means of judging of the markmanship of the men unless the distance at which each shot is fired is carefully kept, as the errors arising from an imperfect knowledge of the distance are very considerable.

Finally, in order to give the means of conveniently comparing the

relative proficiency at individual practice, describe about the centre of impact of the shots circles of 50, 100, 150, etc., yards radius; make shots falling within these circles count 12, 6, 4, 3, 0, progressively outwards; those between 250 and 300 to count minus 3, those between 300 and 350 minus 4, those between 350 and 400 minus 6, and so on, as indicated in the diagram.

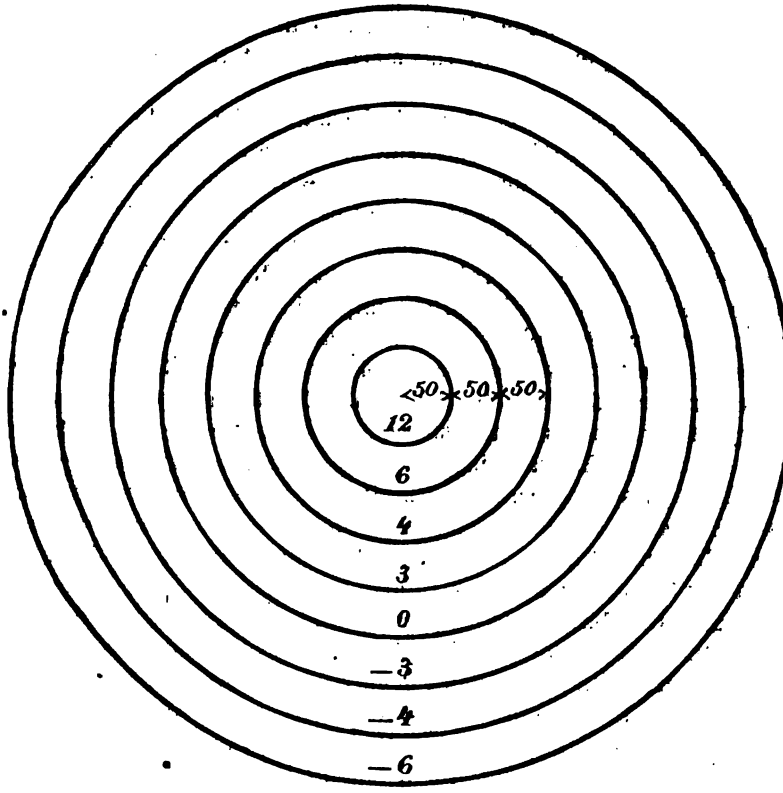

To adapt this method to battery practice, whether moving or stationary, describe the circle about the horizontal centre of the target. In the individual practice the object is to teach the marksman to shoot close; in battery practice to hit the object aimed at.

With regard to the weight to be assigned to celerity in the service of the guns, whether at individual or battery practice, the following plan may be adopted: Assuming that the 8-inch M. L. R. and the IX inch S. B. can be properly served from fire to fire in two minutes, the 6-inch B. L. R. in one minute thirty seconds, and the 60-pounder B. L. R. in one minute; let every gun that exceeds this rate of serving gain 0.1 of a point for each second of such excess, and guns falling short of the standard lose 0.1 of a point for each second. In calculating the loss or gain for celerity in battery fire, use the mean rate of the broadside as the basis and calculate the gain or loss of the whole battery as above.

Thus the mean rate of the *Richmond's* broadside, six IX-inch S. B., one 8-inch M. L. R., and one 60-pounder B. L. R., is, $\frac{7 \times 120 + 1 \times 60}{8}$ = 112.5 seconds.

Finally, in stating the results of target practice, whether of marksmen or of the battery, state the merit, or the ratio of the total number of points possible to the number of points made.

It will be seen that the merit may exceed unity through exceptional rapidity of service, even when the merit without time is considerably less than unity.

Plotting target practice on a vertical plane.—The methods thus advanced of plotting target practice and assigning a merit to guns' crews and ships do not provide for transferring the shots into a vertical plane; and, as the targets we attack at sea are nearly or always vertical, and as for this reason a vertical diagram conveys more meaning to the eye, it is necessary to state why this has not been done. In the case of individual practice, the position of the ship being fixed, it is easy enough to plot on the vertical plane; and vertical diagrams are always made of the shot points of each gun captain and furnished to the officer of his division for exhibition to the men. But from the necessary inaccuracy of any process of transferring, it is deemed fairer to find the merit from the horizontal diagram. As to the battery practice, it is obviously impossible, from the variable position of the ship, to plot on the vertical plane without very greatly increasing the elaborateness of the records; and, it must be observed, a ship's officers should not be taken away from their stations at general quarters for the purpose of recording, particularly at battery practice.

While the reasons here assigned for not completing the record of practice under way are excellent, it may be urged, as a reason why it should be done, that the only reward of merit our gun captains ever receive is the satisfaction of seeing their names and scores posted on a bulletin-board. The score, then, should be presented in the most graphic and most complete manner possible, so that even the dullest man in the ship could understand it. How incomplete the present record is* may be judged from the fact that it is quite impossible to discriminate between lateral and range errors, and consequently, a line shot from a 6-inch B. L. R., passing a few feet above the target, receives the same merit mark as a shot having a lateral error of 100 yards.

But, apart from the record, the general objection may be made to any system of final representation on the horizontal plane that it is apt to mislead where widely different classes of guns are employed. The accompanying diagram shows the trajectories of two shots fired at the water-line of an imaginary ship at 1,400 yards range; the upper trajectory being that of a IX-inch S. B., the lower that of a new 6-inch B. L. R. Both shots have an error in range of 100 yards, but the rifle projec-

*The record of the latest battery practice of the N. A. squadron, that of June last, is complete, and the shots are plotted on the vertical plane.

tile would strike midway up the side of a ship, at T, whose rail is 20 feet above the water-line, while the S. B. shell would pass 12 feet above the rail; the error in laying the gun in the case of the S. B. is 0° 26′, while in that of the B. L. gun it is less than 0° 8′.

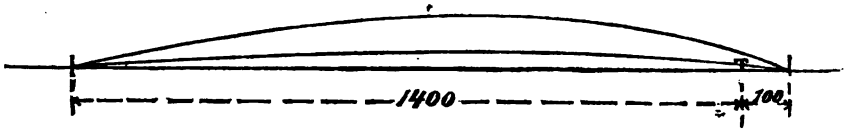

Reverting again to the question of relative merit, it will be seen that the present scale operates unfavorably to the new high-power guns. In the instance just cited both shots receive the same figure of merit, 6 points. Now while it is true that the natural errors of the B. L gun are much less than those of the S. B., and its sight radius is much greater, the former discrepancy is more than made up in practice by causing the B. L. gun to shoot at a considerably greater range, and the ratio of increase of accuracy resulting from the longer sight radius is greatly out of proportion to the ratio existing between the errors in laying.

The following extract from a recent squadron order will serve to explain the manner of conducting fire with R. F. and machine guns. The order has reference to the battery practice of last November:

As the guns of the *Atlanta* and *Dolphin* are so much better than those of the other ships, these ships, while steering a tortuous course across from one observing boat to the other, will keep at an average distance of 1,200 yards from the target; whilst the *Richmond*, *Ossipee*, and *Galena* will keep at an average distance of 900 yards. The boats of the observers will be anchored at 1,200 yards from the target. This datum will aid the captains of ships in keeping at about the right distance.

Besides their regular firing with the main battery, the *Dolphin* and *Atlanta* will carry out some extra firing with their secondary batteries. The *Dolphin*, firing with *one* 6-pounder, will steam straight at the target at full speed from 1,500 to 300 yards; and will also steam straight away from the target, while firing *one* 47-mm. gun. She shall also fire *one* 6-pounder, while steaming in a straight line by the target, so as to bring it from broad on the bow to broad on the quarter. Her least distance from the target on this occasion shall be about 900 yards. The *Atlanta* will also execute this latter practice.

The normal rate of serving the Hotchkiss R. F. and revolving guns shall be taken at six seconds. These guns shall gain or lose points for celerity in exactly the same way as other guns.

Finally, it is contemplated, in the course of the practice of each ship, to open fire with the machine (mounted in their proper place) and magazine guns with ball cartridge upon the target at from 400 to 700 yards range.

CONCLUDING REMARKS.

The fundamental object of all gunnery training and of all target practice is to prepare a ship's company for possible battle, and to this end the drill of the battery and target exercises should both be conducted, as nearly as possible, under the various conditions and according to the methods that would obtain in actual combat. The Italian regulations on "prepared fire" show how thoroughly such a scheme can be carried into practice.

But before proceeding to the training of the battery as a whole, a great deal of individual training is necessary,* and since we have no school especially devoted to gunnery instruction, this training must be given on board cruising ships. The manner of doing so is left largely to the individual judgment of commanding officers. All systems must have the same end in view, and it is believed that any system based on common sense, if persisted in, is bound to give good results. But the training should be practical; aiming drills are excellent as a preliminary, but the man that is to be taught to handle a gun should early become accustomed to the noise and recoil of a gun loaded and fired under service conditions.

It is possible that individual training might, with advantage, be specialized to a certain extent. It is rather too much to expect an enlisted man to be able to hand, reef, and steer, and at the same time to be sharpshooter, artillerist, and torpedoist; it is impossible that he should possess all these accomplishments in an equal degree, and his predilection for one or the other of them should be encouraged and turned to account. A development of this idea would mean that our gun captains should be selected solely by reason of their proficiency as gunners and marksmen, and irrespective of their ability to blow a boatswain's call or pass a weather earing.

The manner of training the battery is prescribed in the Ordnance Instructions. The drills therein contained are designed to meet all the various demands that may be made upon the gun under any and all circumstances—in other words, they are based upon the tactics of the gun—and as all the circumstances supposed are probable ones, no part of the drill should be omitted.

An important tactical detail that perhaps does not always receive the attention it merits is that relating to converging broadside fire. Such fire is of undoubted value when manœuvring at close quarters and at high rates of speed; and when by reason of smoke, darkness, or other cause, the target is invisible from the battery, it is the only kind possible. Doubtless in the new cruisers more accurate means of regulating broadside fire will be provided; but in the meantime much necessary instruction may be derived from the use of the simple devices recommended in the Ordnance Pocket Manual.

The thorough course of training and drill contemplated in the Ordnance Instructions requires much more time than is at present given to it, or can be given to it under the existing order of things. In order

* It is the custom of the service in newly-commissioned ships to proceed at once to the training of the battery, and to postpone individual instruction until each man has acquired a fair knowledge of the various duties pertaining to his particular station at his own gun and has become reasonably prompt and efficient in their performance. This course is necessary in order that the ship may acquire a certain fighting efficiency before putting to sea; but it is to be doubted that it gives the best results in the end.

that the requisite time may be had, it is absolutely necessary to do away with much of the senseless drill and labor that now form part of the daily routine of our ships.

The most noticeable point in connection with our target practice is that we have not enough of it. The personnel of our ships possesses superior intelligence; our gun captains can explain the mechanism of all parts of the gun and carriage, give weights of charge and projectile, describe drift and deviation and how they are allowed for—in fact know all about a gun except how to hit a target with it. And all for want of practice!

If it is worth while to spend thousands of dollars annually for the purpose of providing our Navy with costly modern guns, it is equally worth while to make those guns really effective. This can be done only through a liberal allowance of ammunition, to be judiciously expended in target practice.

The exhibition to the crew of diagrams representing the results of target practice undoubtedly does much to promote a spirit of emulation, and is therefore desirable. The representation should be easy of comprehension, and without question the method that conveys most meaning to the eye is that in which the points of impact are projected on the vertical plane.

If this record is to be supplemented by a system of points, and the competition is to be one of ships having different classes of guns, the system, in order that it may be fair to all, should be based upon a careful consideration of the mean errors of the pieces, the distances between sights, and the accuracy of the sighting apparatus.

Broke used to give a pound of tobacco to every man that put a shot through the bull's-eye, and won a victory that made his name known throughout the world. England to-day encourages her men to strive to hit the bull's-eye through the more material medium of pounds, shillings, and pence; and, following her example, France, Germany, and Italy have each adopted a system of substantial recompense to those who excel. Nor is reward in all cases confined to a comparatively few gun captains: the rate of seaman gunner is open to any seaman in Her Majesty's service who will subject himself to a moderate course of study; and the incentive to do so is to be found in the fact that seamen gunners are qualified to hold all petty officers' ratings, and that they *exclusively* are entitled to vacant gunners' warrants.

IV.

NAVAL MANŒUVRES, 1887.

By Lieut. W. H. Beehler, U. S. N.

For purposes of instruction, and in order to keep pace with the rapid progress in naval science by the practical solution of problems in naval tactics arising under the present conditions of warfare, all the navies of the world fully recognize the necessity of elaborate annual naval manœuvres.

During the last year the nature and scope of the English, French, and Italian naval manœuvres were on a larger scale than usual. The operations of our own North Atlantic squadron, though somewhat crippled by its being largely composed of old types of vessels, afforded much instruction in tactics, signaling, target practice, operations of the naval brigade, and torpedo work.

The principal manœuvres are described in the following article, compiled from parliamentary reports and accounts in the current periodicals and journals. The description of the operations of our own squadron last fall is compiled from the reports of the Board of Umpires, and Ensigns T. S. Snowden and John S. Watters, U. S. Navy, Intelligence Officers of the *Ossipee* and *Atlanta*.

ENGLISH.

The English naval manœuvres of the summer of 1887 were subsequent to the grand jubilee naval review at Portsmouth, July 23, 1887. The review furnished opportunity for conducting a series of evolutions, illustrating the tactical value of different types of vessels and furnishing valuable experience in conducting naval operations.

The assemblage of the fleet participating in the review was in itself an illustration of the available strength of the British navy in the English Channel.

In the order for the naval review the fleet was divided into three cruising squadrons; A, B, and C moored in double column by divisions, ships at two cables distance, columns three cables apart. Five distinct coast-defense squadrons, consisting of coast-defense ships, gun-boats, and torpedo-boats, were formed in double column by divisions, parallel to and inshore of the A, B, and C squadrons.

A list of the vessels in each of these eight squadrons is given in the table following.

Besides these, six training brigs were moored in column of vessels parallel to and inside of the first D coast-defense squadron. Ten large troop ships were moored outside of and parallel to the starboard divisions of A, B, and C squadrons, and beyond these, near the shore of the Isle of Wight, were the merchant steamers, steamers on the Admiralty list of auxiliary cruisers, and yachts and small craft, all crowded with visitors. Foreign men-of-war were anchored off Browndon about eight cables astern of the fleet.

Saturday, July 23, the royal flotilla, consisting of the yachts *Galatea*, *Victoria and Albert*, *Osborne* and *Alberta*, the despatch vessels *Helicon* and *Enchantress*, and the troop ships *Euphrates*, *Crocodile*, *Malabar*, and *Assistance* passed through the fleet in review, commencing from the rear and steaming between the five coast-defense squadrons and the port divisions of the cruising squadrons, and then back between the double column of the cruising squadrons. The Queen was on board the *Victoria and Albert*.

The review was the most imposing ever seen afloat; all the ships were dressed and at night brilliantly illuminated by electric searchlights, etc.

Ships in jubilee naval review, Spithead, July 23, 1887.

Name.	Type.	When completed.	Displacement.	Indicated horse-power.	Trial speed.	Squadron.
Agincourt	Armored broadside.	1868	10,690	6,870	14.8	A port.
Black Prince	....do	1862	9,210	5,772	13.6	
Collingwood	Armored barbette	1887	9,150	9,558	16.5	
Iron Duke	Armored broadside.	1871	6,010	4,270	11.	
Inflexible	Armored turret	1881	11,880	8,407	14.7	
Archer	Torpedo cruiser	1887	1,630	4,250	17.3	
Rattlesnake	Torpedo vessel	1887	450	2,700	19.5	
Minotaur	Armored broadside.	1867	10,690	6,700	14.4	A—starboard.
Impérieuse	Armored barbette	1886	8,400	9,978	17.2	
Conqueror	Armored turret	1883	6,200	5,859	15.5	
Sultan	Armored broadside.	1871	9,290	7,720	14.	
Monarch	Armored turret	1869	8,320	7,840	14.9	
Mercury	Cruiser	1884	3,730	7,290	18.9	
Curlew	Torpedo vessel	1886	955	1,500	15.	
Edinburgh	Armored turret	1887	9,150	7,541	15.2	B port.
Devastation	....do	1873	9,330	6,638	13.8	
Ajax	....do	1883	8,510	6,440	13.5	
Neptune	....do	1881	9,310	8,000	14.2	
Shannon	Armored broadside.	1877	5,390	3,540	12.3	
Amphion	Protected cruiser	1886	3,750	5,903	16.5	
Mohawk	Torpedo vessel	1886	1,630	4,250	16.	
Hercules	Armored broadside.	1868	8,680	6,750	14.7	B—starboard
Hotspur	Armored turret	1871	4,010	3,060	12.6	
Invincible	Armored broadside	1870	6,010	4,830	12.8	
Rupert	Armored turret	1874	5,440	4,630	13.6	
Belleisle	Armored broadside.	1878	4,870	4,020	12.2	
Mersey	Protected cruiser	1887	3,550	6,000	17.5	
Fearless	Torpedo vessel	1886	1,430	3,200	15.9	
Rover	Cruiser	1876	3,460	4,960	14.5	C port.
Calypso	Protected cruiser	1884	2,770	3,202	14.9	
Arethusa	....do	1885	3,750	5,500	16.7	
Active	Cruiser	1871	3,080	4,130	14.	C—starboard.
Volage	....do	1870	3,080	4,530	13	
Inconstant	...do	1869	5,780	7,360	15.2	

Ships in jubilee naval review, Spithead, July 23, 1887—Continued.

Name.	Type.	When completed.	Displacement.	Indicated horse-power.	Trial speed.	Squadron.
Prince Albert	Armored turret	1866	3,880	2,130	11.2	D—flotilla port.
Medway	Coast gun-boat	1877	363	310	9.5	
Badger	....do	1872	254	230	8.	
Bonetta	....do	1871	254	250	8.5	
Bustard	....do	1871	254	190	8.1	
Hyæna	....do	1874	254	210	8.1	
Kite	....do	1871	254	190	8.1	
Pickle	....do	1873	254	270	8.6	
Staunch	....do	1868	180	130	7.6	
Torpedo-boat No. 32	Yarrow, 125 feet	1886	70	700	19.5	
No. 61	....do	1886	70	700	19.5	
No. 63	....do	1886	70	700	19.5	
No. 79	....do	1886	70	931	20.	
Glatton	Armored turret	1872	4,910	2,870	12.1	D—flotilla starboard.
Medina	Coast gun-boat	1877	363	310	9.5	
Arrow	....do	1871	254	260	8.7	
Blazer	....do	1871	254	270	8.7	
Bouncer	....do	1882	265	230	8.3	
Cuckoo	....do	1874	254	180	8.3	
Insolent	....do	1882	265	232	8.3	
Mastiff	....do	1871	254	240	8.3	
Pike	....do	1873	254	240	8.5	
Torpedo-boat No. 31	Yarrow, 125 feet	1886	70	700	19.5	
No. 34	White turnabout	1886	70	967	19.8	
No. 62	Yarrow, 125 feet	1886	70	700	19.5	
Hecate	Armored turret	1877	3,480	1,750	10.6	E—flotilla port
Tees	Coast gun-boat	1878	363	320	9.5	
Pincher	....do	1880	265	230	8.4	
Snake	....do	1871	254	220	8.5	
Torpedo-boat No. 44	Thornycroft	1887	60	650	19.	
No. 46	....do	1887	60	650	19.	
No. 49	....do	1887	60	650	19.	
No. 42	...do	1887	60	650	19.	
Cyclops	Armored turret	1877	3,480	1,660	10.7	E—flotilla starboard.
Spey	Coast gun-boat	1878	363	410	9.9	
Weasel	....do	1874	254	190	8.3	
Snap	....do	1873	254	250	8.4	
Torpedo-boat No. 41	Thornycroft	1887	60	650	19.	
No. 45	....do	1887	60	650	19.	
No. 48	....do	1887	60	650	19.	
No. 50	...do	1887	60	650	19.	
Tay	Coast gun-boat	1878	363	400	9.9	F—flotilla port.
Plucky	....do	1870	195	220	8.5	
Fidget	....do	1872	254	210	8.2	
Torpedo-boat No. 35	White turnabout	1886	70	967	19.8	
No. 72	Yarrow, 125 feet	1886	70	700	19.5	
No. 37	White turnabout	1886	70	967	19.8	
No. 30	Yarrow, 125 feet	1886	70	700	19.5	
Hydra	Armored turret	1876	3,480	1,470	10.9	F—flotilla starboard.
Sabrina	Coast gun-boat	1878	363	390	9.6	
Bulldog	...do	1872	254	270	8.5	
Scourge	....do	1871	254	230	8.5	
Torpedo-boat No. 36	White turnabout	1886	70	967	19.8	
No. 70	Yarrow, 125 feet	1886	70	700	19.5	
No. 33	....do	1886	70	700	19.5	
No. 38	White turnabout	1886	70	967	19.8	
No. 60	Thornycroft	1887	60	650	19.	G—flotilla port.
No. 52	...do	1887	60	650	19.	
No. 55	....do	1887	60	650	19.	
No. 58	...do	1887	60	650	19.	
Gorgon	Armored turret	1874	3,480	1,670	11.	G—flotilla starboard.
Torpedo-boat No. 59	Thornycroft	1887	60	650	19.	
No. 51	...do	1887	60	650	19.	
No. 53	.. do	1887	60	650	19.	
No. 56	....do	1887	60	650	19.	
Trent	Coast gun-boat	1878	363	380	9.4	H—flotilla port.
Torpedo-boat No. 26	Thornycroft	1886	60	650	20.	
No. 81	White turnabout	1885	125	1,387	20.7	
No. 80	Yarrow, 135 feet	1887	102	1,600	23.	
Bramble	Gun vessel	1887	715	1,000	13.	H—flotilla starboard.
Slaney	Coast gun-boat	1878	363	370	9.5	
Torpedo-boat No. 27	Thornycroft	1886	60	650	20.6	
No. 28	.. do	1886	60	650	20.6	
No. 29	....do	1886	60	650	20.6	
No. 54	....do	1887	60	650	19.	

The fleet consisted of—

Armored vessels	26
Cruisers	14
Gun-boats	31
Torpedo-boats	38

These carried 442 guns, exclusive of rapid fire and machine guns. The total numb er of officers and men in the fleet was 16,136.

SYNOPSIS OF THE MANŒUVRES, AUGUST 1 TO 5.

The different squadrons sailed from Portsmouth on Monday, 25th of July, to rendezvous and manœuvre preparatory to the grand manœuvres described in the official report.

The H flotilla was disbanded and most of the torpedo-boats and vessels belonging to it were distributed among the A and B squadrons and the D flotilla. There were also some changes of vessels in the different divisions of the squadrons, so that the attacking and defending division were not the port and starboard divisions of the jubilee review formation.

During the week previous to the declaration of war, Monday, August 1, the different squadrons reached their prescribed rendezvous and conducted a series of preliminary drills and manœuvres, under conditions approaching as far as possible those of actual war.

Tactical evolutions were practiced, and upon the declaration of war the squadrons were in position to commence the different manœuvres described in the official report. The D flotilla operated with the A squadron.

A squadron—first day.—Monday noon to Tuesday noon.

The attacking division steamed direct for the Lizard, and, finding no enemy, deliberately took possession of Falmouth, where the division remained for ten hours of daylight. In accordance with the rules, that port was considered captured and its shipping destroyed.

The defending division cruised during the first twenty-four hours on the Portland-La Hague line to prevent the hostile division running up the Channel. Scouts were sent to reconnoitre and torpedo-boats stationed at Portland to bring out telegrams from the lookout stations at the prominent headlands along the Channel coast. The armored vessels were in single column and close order, and steered north and south until 10.30 a. m., when, having received definite information of the presence of the attacking division at Falmouth, it cruised in pursuit to the westward. At this time it was too late to reach Falmouth before the attacking division had left.

Second day.—The attacking division left Falmouth at 1.30 p. m., having captured that place, and sailed to a rendezvous in Mid-Channel, while the *Impérieuse*, *Archer*, and *Curlew* reconnoitred. The *Archer* joined at 10.45 p. m., and reported having seen the defending division at 5 p. m., standing into Plymouth. The *Archer* was not recognized by the defend-

ing division, as she was disguised by means of a canvas funnel and canvas paddle-boxes. She did not see the division go into port, but the information received decided Admiral Fremantle to go up the Channel. At 7.20 a. m. the *Mercury* was seen, and the *Impérieuse* chased to drive her off and to rejoin the division to the eastward.

The defending division steamed for the Start at noon on Tuesday, with the *Collingwood* thrown forward to reconnoitre. At 5 p. m. no signs of the enemy were seen off Plymouth, and the division returned to Portland to await further information as to the movements of the enemy. The *Mercury* rejoined at 4.20 a. m., and brought report from the Lizard that the enemy was 35 miles southeast of Lizard Point at 7 p. m., steering south. At 5.45 a. m. the *Mercury* was sent to Alderney, to return with all dispatch. The division steamed slowly to the eastward, and at 9.30 a. m., when 3 miles from St. Alban's Head, the *Mercury* came in at full speed, firing guns, and signaled that at 7.45 a. m. the entire attacking division was 15 miles north of Cape La Hague, steering east-southeast, and that she had been chased by the *Impérieuse* until 9.10 a. m., when 11 miles south-southeast of St. Alban's Head.

The chase of the fast cruiser *Mercury* by the new armored barbette ship *Impérieuse* resulted in the escape of the cruiser, but the *Impérieuse* managed, by the use of forced draft, to press her. The *Mercury* was short one boiler, and claimed to have gained on her pursuer at the rate of 1½ knots. The speed of the chase is not mentioned.

At 9.30 a. m. the defending division started for Cape La Hague, at full speed, about 11 knots, in line, in open order, with the vessels spread out to cover a front of about 18 miles. Course, S. by E. It was misty, and impossible to see more than 6 miles.

Third day.—At noon the attacking division was 25 miles south of Saint Catherine's Head, steaming up the Channel at full speed, 10 knots. The *Impérieuse* rejoined at 2.20 p. m., and reported that the *Mercury* had probably gone to Portland to telegraph. A portion of the D flotilla was sighted at 9.20 p. m., and at 11 p. m. the main body arrived off Cape Grisnez. From 11.30 p. m. until 2.50 a. m. the division was attacked by torpedo-boats of the D flotilla. The night was clear with bright moonlight and it was claimed that the torpedo-boats were seen and exposed to fire for such a long time that their attacks did not delay the division. At 3.35 a. m. the division steamed in between the vessels of the D flotilla and the land; the flotilla was engaged as the division passed, but the latter did not stop. At 7.15 a. m. the division anchored at the Nore. The *Curlew* was assigned to act as a lookout ship off the Foreland, but she broke down, and the *Archer* was sent to perform this duty; but before she reached the station the defending division hove in sight, and the attacking division immediately got under way to pass out into the North Sea along the Swin.

The defending division was about midway in the Channel, bound for Cape La Hague, at noon. The French coast was sighted at 1.45 p. m.,

but there was no news of the enemy. The general recall was hoisted, and the squadron proceeded at full speed to St. Catherine's Point, where they arrived at 6.30 p. m. No news of the enemy, but the division proceeded at full speed to Dungeness. The *Collingwood* broke down, but was able to proceed with one screw after a delay of three hours. The *Inflexible* had to stop for one hour to repack a piston, and the *Sultan* stopped for thirty minutes to repack valves. At 5.30 a. m., off Dungeness, a telegram announced that the enemy had passed Ramsgate that morning, steering north. The *Minotaur*, *Monarch*, *Mercury*, and one torpedo-boat pushed on for Dover, where the *Sultan* and three torpedo-boats of D flotilla joined at 8 a. m. At 11 a. m. the *Rattlesnake* and two torpedo-boats from Portland joined, and the whole of the D flotilla waited at the entrance to the Alexandra Channel. At 11.40 the enemy was sighted at anchor at the Nore. At this time *Inflexible* was out of sight and the *Collingwood* was 36 miles astern.

Fourth day.—The attacking division steamed out through the Swin while the defending force took a course through the parallel channel of the Black Deep. The two divisions were separated by the Sunk Shoal. The Black Deep is about 2 miles long, the deepest water is in mid-channel, and it is difficult for long ships to turn in its narrow channel.

The attacking division took advantage of the situation, turned back, and went up the river to Thames Haven, and could have gone up to Gravesend. The defending division turned as soon as it reached a point where the channel was wide enough, but by the time it reached the Nore it was low water and the vessels could not pass across the shallow places between Leigh-Middle and Yantlet Flats until the tide served.

In actual war the attacking division might have escaped at night perhaps, with comparatively little loss; but by decision of the umpires, in accordance with the rules, the attacking division was declared to have been captured at Thames Haven.

B and C squadrons.—All information concerning the manœuvres of these squadrons is contained in the official report, of which the following is a copy:

Report on naval manœuvres carried out by Her Majesty's fleet off the coasts of Great Britain and Ireland in the summer of 1887.

GENERAL REMARKS.

The general idea of the operations carried out by the A squadron in the Channel was that the British cruisers had lost touch of an enemy's fleet which had put to sea with a view of doing as much damage as possible to the English ports in the Channel and in the Thames and Medway, avoiding, if possible, an engagement with the British fleet.

Rules for the guidance of A and B squadrons:

(1) The enemy's squadrons (2d divisions of A and B) are not to approach within 2 miles of the entrance of any port attacked.

(2) If they can remain within 8 miles of the entrance of any port for ten hours during daylight without the appearance of the opposing squadron, the enemy's squadron to be considered as having attained their object and to be free to attack another port.

(3) Should the opposing squadron sight the enemy's squadron before the expiration of the ten hours, the enemy is at once to endeavor to escape; the armor-clad vessels of the opposing squadron are not to approach within 1 mile of the enemy's squadron.

(4) Should the squadrons sight one another at sea, and the opposing squadrons (1st divisions of A and B) can maintain a position for two hours within 3 miles of the enemy, this is to be considered as evidence of the ability of the opposing squadron to force an action, and that the object of the enemy's squadron (which is of the nature of a surprise) is frustrated; the distance above mentioned of 3 miles is to be considered as measured between the nearest armor-clads of squadrons.

(5) Should the umpire on board the ship of the senior officer of the opposing squadron decide that the object of the enemy's squadron has been frustrated, both divisions are to rejoin by signal and cruise as one fleet until the expiration of the war.

The following places are to be taken as the entrance of the port from which the distance of 8 miles, stated in paragraph 2, is to be measured:

English Channel: Plymouth, Rame Head; Portland, Bill of Portland; Portsmouth, St. Catherine's light-house; Sheerness, Nore light-house.

St. George's Channel: Milford, St. Anne's Head; Holyhead, Great Stack light-house; Liverpool, Northwest light-ship; Dublin, Kish light-ship; Queenstown, Daunt Rock light-ship; ports in Bristol Channel, Lundy Island.

The attacking squadron, under Rear-Admiral Fremantle, consisted of five iron-clads: *Agincourt, Impérieuse, Conqueror, Black Prince*, and *Iron Duke;* one fast torpedo cruiser, the *Archer*, and the gun vessel *Curlew*.

The defending force, under Sir W. Hewett, was composed of five iron-clads: *Minotaur, Sultan, Monarch, Inflexible*, and *Collingwood*, with the cruiser *Mercury*, the torpedo gun-boat *Rattlesnake*, and three torpedo-boats; a flotilla consisting of two turret ships, sixteen gun-boats, and seven torpedo-boats being also stationed in the Downs to guard the Straits of Dover and the entrance to the Thames and Medway. Lookout stations were organized by the defending force at the Lizard, Start, Portland Bill, St. Catherine's, Beachy Head, Dungeness, and the South Foreland, which were night and day in telegraphic communication with each other and with Portsmouth, Devonport, Portland, and Deal.

PROCEEDINGS OF "A" SQUADRON.

Monday, August 1.—At noon, on August 1, when war was declared, the defending squadron was off the Bill of Portland, and the following arrangements were made at 2 p. m.:

The *Rattlesnake* was sent round the Eddystone and to make a detour towards Ushant, returning to Portland by Tuesday evening.

The *Mercury* proceeded to Alderney. The iron-clads, accompanied by two torpedo-boats, cruised together on the Portland-La Hague line, and one torpedo-boat remained at Portland to bring out telegrams.

At noon the attacking squadron, except the *Curlew*, was 40 miles west of Ushant and 100 miles from the Lizard. The *Curlew* had been left at Falmouth with orders to leave at 9 a. m., and rejoin at a prearranged rendezvous. At 12.45 p. m. the squadron steered for the Lizard at full speed, with lookout ships on either bow and starboard beam. At 4.20 p. m., in the hopes that the homeward bound cape mail would report the squadron bound up Channel, the course was steered to the eastward. Shortly after this the *Curlew* rejoined, and reported that the defending fleet was off Portland, and that two officers had been left behind to procure information and spread false news. At 6 p. m. the course for the Lizard was resumed, and at sunset the squadron formed in two columns, with the *Archer* 1 mile ahead and the *Curlew* 2 miles on the starboard bow.

Tuesday, August 2.—At 1 a. m. speed was reduced, the Lizard being west ¾ south about 8 miles, and at 1.35 a. m. the squadron, having arrived within 8 miles of Falmouth, formed in single column and stood off and on until 5.10 a. m., when they

anchored in Falmouth Bay, except the lookout ships, which were detached as follows: The *Archer*, disguised as a merchant steamer, to look out off the Start and communicate all information to the *Curlew*, which was similarly disguised and stationed 10 miles east-southeast of Falmouth. The *Impérieuse* was sent southeast about 8 miles. All these ships had general instructions that if chased they were to endeavor to draw the defending squadron to the westward.

At 6.30 a. m. Rear-Admiral Fremantle received information from the Start that no ships of war were in the vicinity, and that the *Rattlesnake*, belonging to Sir W. Hewett's squadron, had passed west at 5.30 the previous evening, going at full speed. At 11 a. m. he was informed from Dartmouth that there was no appearance of the enemy from there.

To return to the defending squadron, which was cruising on the Portland-La Hague line.

At 5 a. m. the *Mercury* came out of Alderney and reported "no news." At 6.15 a. m. the torpedo-boat brought out the following telegrams from Portland:

"LIZARD 2 a. m. (received Portland 2.42 a. m.; received by admiral 6.15 a. m.). 1.50 a. m. Tuesday, four ships of war, the leading one having the appearance of *Black Prince*, are about 5 miles east-southeast of station, having come in from the southward and making direct for the land, their heads towards Falmouth. No steaming lights of any description can be seen from either, but they have been flashing apparently to each other. Wind light; fine, clear moon."

"LIZARD, 2.20 a. m. (received Portland, 2.50 a. m.; received by admiral 6.15 a. m.). There seems to be little doubt but that the ships reported in No. 6 are the attacking squadron, as one large ship has just flashed numeral 20 to the other ships. They are going very slow and still heading towards Falmouth."

As these telegrams were received at 6.30 a. m., and Admiral Fremantle left at 1.30 p. m., the defending squadron would have had seven hours in which to cover the 110 miles to Falmouth. It is to be observed that the *Mercury* and *Rattlesnake* were both away. The vice-admiral decided to wait further news before going to the westward, and sent a topedo-boat into Portland for telegrams.

At 10.15 a. m. the following telegrams were brought off:

"LIZARD, 4.50 a. m. (received Portland 5 (?) a. m.; received by admiral 10.15 a. m.).—Tuesday, 4.15 a. m. Attacking squadron, consisting of *Agincourt*, *Black Prince*, and *Iron Duke*, two turret ships, and two gun-boats, 12 miles east of the station, steering N. N. W., heading direct for Falmouth in single line ahead, all cleared for action, and supposed steaming full speed. They have hoisted several signals, but can not distinguish them, not being sufficiently light."

"LIZARD, 5.15 a. m. (received Portland 5.34 a. m.; received by admiral 10.15 a. m.).—5 a. m. Turret ship, supposed *Impérieuse*, has parted company with the squadron and is now steering southeast up Channel. We have lost sight of the other ships around the Black Head."

"LIZARD, 6.47 a. m. (received 7.25 a. m.; received by admiral 10.15 a. m.).—6.35 a. m. *Impérieuse* now between 20 and 30 miles southeast of station, heading north northwest, coming back, and the gun-boat, supposed *Curlew*, is just in sight, about the same distance, bearing east, supposed hove to."

"LIZARD, 8.15 a. m. (received Portland 8.54 a. m.; received by admiral 10.15 a. m.).—8 a. m. The vessels presumed *Impérieuse* and *Curlew* are in about the same position, apparently hove to."

At 10.30 a. m. No. 54 torpedo-boat was sent into Portland to inform the *Rattlesnake* and *Mercury* that the squadron had gone to the westward and to direct them to watch the Portland-La Hague line. The squadron, being now about 80 miles from the Rame Head and about 110 miles from Falmouth, proceeded full speed for the Start, throwing forward the *Collingwood* at 12.15, and the *Inflexible* with torpedo-boats at 2.40 p. m.

At 3 p. m. the *Collingwood* reported from the Start:

"Latest news from Lizard at 11.30 a. m., turret ship *Impérieuse* steaming full speed towards Falmouth."

At 5 p. m., being 6 miles from Rame Head and no signs of the enemy off Plymouth, the general recall was hoisted and the squadron shaped course to return to Portland. At 6 p. m. Her Majesty's ship *Himalaya* reported the enemy off Falmouth that afternoon at 3 p. m., standing South.

It is now necessary to revert to the attacking squadron, which was left at anchor off Falmouth.

Rear-Admiral Fremantle weighed at 1.30 p. m., and steered S. at a speed of 6 to 7 knots to a rendezvous in Mid-Channel. At 2 p. m. the *Conqueror* was detached E. S. E. 5 miles, and at 2.15 p. m. the *Impérieuse* was ordered to proceed, to communicate with the *Archer*, and rejoin at rendezvous.

At the same time the *Curlew* was recalled and directed to change her disguise, as it was described in the Western Morning News of that day. She was then stationed 4 miles on the starboard bow of the flagship. At 3 p. m. Her Majesty's ship *Himalaya* passed, and at 3.30 the course was altered to southeast by south. At 6.10 the *Impérieuse* rejoined, and reported:

"Left *Archer* to the eastward of Eddystone. She reports *Collingwood* is off the Start and no other vessel in company. Does not think *Collingwood* saw her. I have directed her to return and watch *Collingwood*, and bring news to you at rendezvous as soon as possible after daylight."

At 8 p. m. the squadron was in latitude 49° 28′ N., longitude 3° 59′ W., and was steering southeast by south, 6 to 7 knots, in single column in line ahead, with the *Conqueror* on the port bow, distant half a mile, the *Impérieuse* on the starboard beam at the same distance, and the *Curlew* 1 mile ahead.

The *Archer* was still detached off the Start, but at 10.45 p. m. she rejoined and reported, "Enemy's squadron standing into Plymouth at 5 p. m., three masted, and two turret ships. Cruiser appeared to remain off the Start." The rear-admiral asked, "What did cruiser look like?" Reply: "Large cruiser; *Mercury*, I imagine." In answer to further questions the *Archer* made reply, "I saw enemy as far as Mewstone, but not into port." On the receipt of this information the attacking squadron proceeded full speed up Channel.

It is to be remarked that the rear-admiral was in doubt as to the future movements of the vice-admiral, as the *Archer* had not seen the defending squadron alter course to return to Portland, which was done at the very time she left. The report that the *Mercury* was off the Start was also misleading, as that ship was then off Portland. As a matter of fact, when the decision was taken to attempt to run up Channel the defending squadron was nearly off Portland, and was about 70 miles to the eastward of the attacking squadron.

Wednesday, August 3.—The speed of the squadron was regulated by that of the *Black Prince* and *Iron Duke*, which were unable to keep up 10 knots, the weather being misty so that it was not possible to see more than about 5 miles. At 6.20 a. m. the *Conqueror* and *Impérieuse* were ordered to take station, and the squadron proceeded in single column in line ahead with the *Curlew* and *Archer* on either bow.

At 6.30 a. m. the course was altered to northeast by east. At 7.20 a. m. *Archer* reported *Mercury* northwest by west, distant 3 miles. The *Impérieuse* was at once detached in chase, with orders, "Endeavor to shake her off and join me. I shall proceed to the eastward as soon as she is clear." Course was now altered to east, and then to east half south, and the topmasts were sent on deck.

At noon the squadron was in latitude 50° 7′ north, longitude 1° 6′ west, 25 miles south of St. Catherine's Point. At 2.20 p. m. the *Impérieuse* rejoined and reported, "*Mercury* made for Portland." Rear-admiral asked, "What time do you calculate *Mercury* would communicate with defending squadron?" Reply: "By half-past 10 if he was in telegraphic communication with Portland." *Impérieuse* now signaled, "Chased *Mercury* until she made land near Anvil Point, and turned west towards

Portland. I turned east and sighted St. Catherine's; then hoisted general recall and turned southwest until out of sight. *Mercury* must have reached Portland a little after 10 a. m. We just kept pace with her with forced draft, but could not gain on her." Question: "Could you tell me if *Mercury* went into Portland, as I do not think it likely admiral was lying there?" Reply: "I think *Mercury* went to Portland to telegraph."

The squadron now pushed on as fast as possible, and at 4.15 p. m. the rear-admiral signaled: "If fine and fairly clear I shall divide squadron after passing Royal Sovereign Shoal, *Conqueror* and *Impérieuse* passing through usual channel west of the Varne, remainder passing close to Cape Grisnez. I shall endeavor to reach abreast of the Varne about 2 a. m. Second division to be rather later and push through. Squadron to rejoin after passing the Downs. *Curlew* to be on starboard, *Archer* on port bow of admiral, distant 2 or 3 cables. If thick, I shall pass through usual channel; ships in indented line to port. Ships must follow admiral's motions without signals or lights. We are sure to meet enemy's gun-boats and torpedo-boats, and must fight our way through. I do not propose using electric light except in self-defense. Every care to be taken to avoid collision. I hope to reach Nore about 9."

This program, however, was not carried out, since at 5.25 p. m. the *Black Prince* and *Iron Duke* were so far astern that they were ordered to make the best of their way to the Nore. At 6.20 the *Curlew* and *Archer* formed 3 cables on either bow of the *Agincourt*, and the *Impérieuse* and the *Conqueror* 2 cables on either quarter; but the *Curlew* was hardly able to keep up, although the speed was only 10 to 11 knots. In this formation the squadron proceeded until 9.20 p. m., when four gun-boats were sighted. About 11.30 p. m. rockets and the electric light were seen on the port beam.

If is now necessary to describe the position of the Downs flotilla.

At 11 a. m. on Wednesday, the 3d, Captain Long, at Dover, received a telegram from the vice-admiral informing him that it was possible the enemy had passed east. The disposition of the flotilla was then as follows: The five gun-boats stationed between Dungeness and Hastings were ordered to take shelter there in shoal water. The line between Dover Pier and Cape Grisnez was patrolled by torpedo-boats—No. 32 being next to the English shore, No. 79 abreast of the Varne, the *Medway* and *Medina* about 9 and 11 miles respectively from Dover, with No. 62 between the latter and the French coast. Nos. 63, 31, and 61 torpedo-boats were in Dover Harbor. The *Glatton* and four gun-boats were off Deal, and *Prince Albert* and four gun-boats off Margate.

At 9.45 p. m. Captain Long, at Deal, received telegrams, informing him: (1) that enemy was off Beachy Head at 7.30 p. m. running up channel; (2) the vice-admiral was off St. Catherine's at 7.45 p. m., and intended to be off Beachy Head at midnight and Dover at 9 a. m. The *Glatton* and gun-boats at Deal were now ordered to Margate to join the other division; No. 34 torpedo-boat was sent to inform the officer in No. 79 to collect his division, to harass the enemy, and to retire on Margate; but this order never arrived.

The torpedo-boats at Dover were ordered to join No. 79 at the Varne, but the order did not reach them until after the enemy were signaled. About 11 p. m. the *Agincourt*, *Impérieuse*, and *Conqueror* were sighted off Cape Grisnez by the *Medway* and No. 62, and about the same time No. 32 made out the *Archer* between Dover and the South-Foreland.

On the alarm being given, the torpedo-boats acted as follows: No. 32 proceeded to Dover, then out into the Straits, and, meeting *Black Prince*, attacked her, afterwards going to the Varne, and eventually joined the *Glatton* about 7 a. m. No. 61 steamed to Dover and then went out and attacked *Black Prince* and *Iron Duke*, afterwards proceeded to the Gull light-ship, joined No. 79, and with him attacked *Agincourt* and *Impérieuse*. About 2.50 a. m. No. 79, after sighting *Agincourt*, went to Dover, and meeting Nos. 63, 31, and 61 coming out, joined them. Eventually Nos. 63 and 31 together attacked *Black Prince*, and Nos. 79, 31, and 61 the *Iron Duke*. After this at-

tack Nos. 63, 31, and 61, thinking that only two ships had gone by, patrolled off the Varne and joined the vice-admiral off Dover in the morning.

With reference to these torpedo attacks it may be remarked that the night was clear, with a good moon, so that the torpedo-boats were able to find the iron-clads, which in their turn readily made out the torpedo-boats.

The reports as to the success or otherwise of these attacks are very conflicting, the iron-clads being assured that the boats were long under fire before firing their torpedoes, while the torpedo-boats quote instances in which their opportunities may be considered to have been good.

Looking to the facility with which it is possible to miss a small object even in the day-time, it would seem quite within the bounds of possibility that one of these attacks might have been successful. This being the case, it is a doubtful point whether any admiral would in war time attempt to pass the Straits at night without nets in the face of a torpedo flotilla, and if nets are carried it is to be remembered that the speed would have to be reduced to about 5 knots in order that the protection should be effective.

Turning to the remainder of the flotilla:

At 12.10 a. m. the *Glatton* and gun-boats stationed off Deal had joined the *Prince Albert* off Margate, it being Captain Long's intention to have proceeded to the Nore, but the risk of involving his flotilla among the shoals during darkness induced him to abandon this idea, and to stand off and on until dawn. By 3 a. m. the whole of the attacking squadron had assembled off the North Foreland, and were awaiting daylight to pass up the Edinburgh Channel. Captain Long with two turret ships and eight gun-boats was between them and the land.

About 3.35 a. m., when day was breaking, Rear-Admiral Fremantle passed with all his squadron between Captain Long's flotilla and the shore, engaging him as he went by. The *Iron Duke*, having been rendering assistance to the *Curlew*, was a mile or so astern. The attacking squadron now passed on to the Nore, where they anchored at 7.15 a. m.

There is no doubt that in actual war Rear-Admiral Fremantle could have destroyed Captain Long's flotilla, though at probably some loss to himself. It was essential that he should do this in order that his lookout ships should be free to remain off the North Foreland to report the approach of the vice-admiral. It would seem probable that this would have delayed him two hours. If the flotilla had withdrawn to the shoals of Margate, its destruction would have been difficult, and would have taken longer. As the rear-admiral did not wait, he can not be said to have destroyed the flotilla, but only to have partially damaged it.

It is now time to return to the defending squadron, which, after sighting Plymouth at 5 p. m., altered its course to return to Portland, and at midnight was 14 miles southwest of Portland Bill, in sight of which Sir W. Hewett remained during the morning.

At 4.20 a. m. the *Mercury* joined and reported: "*Rattlesnake* left at 9 p. m. to reconnoiter to the southward and be off the Shambles at 3 a. m.;" also that "Lizard reported that at 7 p. m. the enemy were hull down in line abreast, steering south about 35 miles southeast of Lizard." At 5.15 a. m. the *Rattlesnake* returned from the Casquets and reported that he had seen nothing. At 5.45 a. m. the *Mercury* was ordered to proceed to Alderney and return with all dispatch.

At 6.30 a. m. a torpedo-boat brought off telegrams in which the disguises adopted by the ships of the attacking squadron were fully described by the lookout stations at the Lizard and the Start.

At 9.30 a. m., the squadron being about 3 miles from St. Alban's Head, sighted the *Mercury* to the southeast coming up at full speed and firing guns. Sir W. Hewett at once stood towards her, and she then signalled: "At 7.45 a. m. enemy were 15 miles north of La Hague steering east-southeast. All his squadron were with him. Have been chased by *Impérieuse*, who gave up south-southeast by St. Alban's 11 miles; then stood to the east at 9.10 a. m."

Three suppositions were now possible—first, the enemy might have continued his course up Channel, which was considered the most likely; second, he might have turned back as soon as the *Mercury* was out of sight, with a view of attacking Plymouth on the following day; third, he might turn when the *Impérieuse* rejoined him. It would be useless to chase on the second hypothesis, as he had more than 25 miles start. As there was ample time to sight La Hague on the third supposition, and afterwards to save the Thames, it was decided to chase south by east with the squadron spread on either bow of the flagship. As the day was misty, and it was only possible to see about 6 miles, the front covered was about 18 miles. The squadron was ordered to rendezvous at Dungeness.

At 1.45 p. m., having sighted the French coast and heard nothing from the various vessels passed, the general recall was made, and the squadron stood up Channel. It was still doubtful which way the attacking fleet had gone, and the want of a sufficient number of fast lookout ships was severely felt.

At 3 p. m. *Rattlesnake* was ordered to Portland to leave word to telegraph all information to St. Catherine's and Beachy Head and come on at once with torpedo-boats to Beachy Head and the Downs. The squadron shaped course for St. Catherine's and was off there at 6.30 p. m., when *Mercury* was sent in to get news, while the other ships proceeded to Beachy Head. At 11.40 p. m. *Mercury* rejoined, having failed to hear anything.

Thursday, 4th August.—At 2.05 a. m. the *Collingwood* broke down temporarily and was left behind off Beachy Head. She was able to proceed with one screw at 5.45 a. m. The repairs to the other engine would have occupied thirty-six hours. At 5.30 a. m. the squadron stopped at Dungeness. The *Inflexible* reported that she must stop for an hour to repack a piston, and the *Sultan* that she would require half an hour to repack valves.

Dungeness signal station now made "Enemy passed Ramsgate this morning, steering north." This was the first news that had been heard of him since 8 a. m. on the day before. At 5.50 a. m. the *Minotaur*, *Monarch*, *Mercury*, and one torpedo-boat proceeded for the Downs. At 8 a. m. the squadron was off Dover, the *Sultan* having rejoined, as also three torpedo-boats attached to the Downs flotilla, but the *Inflexible* was out of sight and *Collingwood* about 36 miles astern.

At 8.45 a. m. three torpedo-boats were sent into Dover for water, and at the same time the *Inflexible* was seen coming up astern. At 10 a. m. the squadron passed the Gull light-ship and the *Mercury* was ordered ahead to look out. At 11 a. m. the *Rattlesnake*, with two torpedo-boats from Portland, joined, and shortly after the squadron passed the East Margate buoy, a torpedo-boat at the same time reporting the Downs flotilla to be waiting at the entrance of the Alexandra Channel. At 11.40 a. m. the enemy was sighted at anchor at the Nore and at noon the defending squadron passed the North Shingle buoy.

The position was now as follows: Rear-Admiral Fremantle was standing to the northward, to pass out into the North Sea, along the Swin. All his ships were with him except the *Curlew*, which had broken down, but owing to the inferior steaming power of the *Black Prince* and *Iron Duke*, he could not have maintained more than 9 to 10 knots. Sir W. Hewett was steering to meet him, with *Minotaur*, *Sultan*, *Monarch*, *Inflexible* about 5 miles astern, besides *Mercury*, *Rattlesnake*, *Glatton*, *Prince Albert*, six gun-boats, and six torpedo-boats; *Collingwood* was coming up 36 miles astern.

Setting on one side the Downs gun-boat flotilla, which, owing to its inferior speed, was for the purpose of attack of comparatively little value except among the shoals at the entrance to the Thames, the speed of Sir W. Hewett's squadron was superior to that of Rear-Admiral Fremantle's ships, so that the former had the power of giving or refusing action. It is impossible to say what would have happened in actual war beyond this, that Rear-Admiral Fremantle could not have remained at the Nore in the presence of an enemy who was already more powerful than he, and whose re-

inforcements were coming up, and he could not have gone up the Thames without sacrificing his squadron. The most probable event would seem to have been an engagement in the North Sea.

To sum up, the attacking squadron was completely successful in the attack on Falmouth, while at the Nore the defending force had the best of it.

As soon as the defending squadron, under Sir W. Hewett, passed the North Foreland, which occurred at 10.15 a. m., an action could only have been avoided by Rear-Admiral Fremantle's manœuvring among the shoals, because the entrance to the East Swin is nearer to the North Foreland than to the Nore.

To make sure of avoiding an action Rear-Admiral Fremantle should have weighed before 10.15 a. m., when he would have had at the outside three hours in which to do material damage to Sheerness and the neighborhood. Admiral Fremantle had intended to leave the *Curlew* to act as lookout ship at the North Foreland in order to insure that he should be warned in time to effect his escape without fighting an action, in accordance with the rules, but the accident on board that ship prevented this being done, and the *Archer* was not sent back soon enough.

It has been stated more than once in the press that Rear-Admiral Fremantle was unable to effect his escape to the North Sea through not having been supplied with the necessary charts. This statement is inaccurate, the charts referred to having actually been supplied.

PROCEEDINGS OF "B" SQUADRON.

The general idea of the operations carried out by B squadron off the coast of Ireland was as follows:

That the British cruisers had lost touch of an enemy's fleet which had put to sea with a view of inflicting damage to the ports on the west coast of England and Wales and the east coast of Ireland, including Queenstown, avoiding, if possible, action with the British fleet.

The rules were similar to those issued for the guidance of A squadron. The attacking squadron, under Commodore Fitzroy, consisted of five iron-clads—*Edinburgh* (flag) *Neptune, Rupert, Shannon, Devastation,* and two fast cruisers, *Amphion* and *Mohawk;* Vice-Admiral Baird commanding the defending force of five iron-clads—*Hercules* (flag) *Hotspur, Invincible, Belleisle, Ajax,* two fast cruisers, *Mersey* and *Fearless,* and two torpedo-boats.

Squadrons at Milford, Holyhead, and Belfast were also under the orders of the vice-admiral. The squadron at Milford, to guard the trade and ports in the Bristol Channel, consisted of two turret ships, *Cyclops* and *Hecate,* seven gun-boats, and eight torpedo-boats; that at Holyhead, for the protection of the approach to Liverpool, consisted of one turret ship, *Hydra,* six gun-boats, and eight torpedo-boats; while at Belfast were one turret ship, *Gorgon,* and eight torpedo-boats.

Lookout stations were organized by the defending force and telegraphic communication established between Lundy Island, Hartland Point, Roche's Point, Queenstown, St. Anne's Head, and Dunmore. At noon on the 1st, when war was declared, the defending squadron was 60 miles south-southeast of the Head of Kinsale, and the following arrangements were made:

A line of torpedo-boats was ordered to patrol from Hartland Point across the Bristol Channel to the Smalls Light and thence across the Irish Channel to the Barrels light-ship. A fast torpedo-boat was stationed at St. Anne's Head to carry telegrams to the Smalls, and another at Dunmore to go to the Barrels, at one of which two places the vice-admiral intended that the fleet should always be found, and whence he could reach either Lundy Island or Queenstown before the enemy would have had time to do any damage, after hearing by telegraph of his being seen in the offing.

After completing his plans, Vice-Admiral Baird proceeded with his fleet at 8 knots towards the Smalls Islands, off Milford Haven, where he arrived at 10.30 p. m., and then ran along the line of patrols towards the Barrels Light. At daylight on

the 2d the fleet was 11 miles south-southwest of the Tuskar, off the southeast extremity of Ireland. At 10 a. m. the fleet was close to the Barrels light-ship, and at 11 a. m. proceeded for Dunmore, the vice-admiral not being quite confident that his orders had been delivered correctly.

At noon a torpedo-boat from Milford overtook the squadron, bringing Captain Pringle to confer with the admiral, and at 2.10 p. m., while they were in consultation, a man-of-war was sighted from the mast-head bearing southeast by east, and very shortly after her military tops were so conspicuous that she was made out to be the *Amphion*. *Mersey* now signaled, "Strange vessels seen, apparently armored," and was at once ordered to chase.

About 2.45 p. m. a fleet of vessels was sighted bearing east-southeast and standing to the northward, which there could be no doubt was the enemy.

At noon on the 1st the commodore with all his squadron was 60 miles west of Mizen Head, when he opened his orders and proceeded southeast 10 knots, but the *Shannon* not being able to maintain this speed, the squadron eased to 9 knots. At 5 p. m. the *Mohawk* reported that her port engine was disabled and could not be repaired at sea, whereupon she was ordered into Plymouth, as she would only have been an encumbrance to the squadron, which the plans of the commodore required should maintain a speed of not less than 9 knots.

At 2 a. m. on the 2d, being in latitude 50° 26′ north and longitude 7° 58′ west, the course was altered to northeast ¼ east, with the intention of passing through St. George's Channel unobserved and then making straight for Liverpool. The commodore was induced to proceed on this course by the consideration that the port of Cork being undefended, the vice-admiral might conclude this point would be his objective.

During the night the squadron was in single column in line ahead, with the *Amphion* north eight cables, but at 5 a. m. that ship took station 5 miles north, changing to northeast at 7 a. m. At noon the squadron was in latitude 51° 41′ north, longitude 6° 38′ west, and at 1 p. m. a torpedo-boat was observed bearing north-northwest, and a little later a squadron was reported bearing east, which induced the commodore to alter course at 1.30 p. m. to north-northeast ¼ east.

The *Amphion* was now ordered to extend her distance to the northeastward, and later on chase two torpedo-boats north-northeast. The northeast ¼ east course was resumed at 2 p. m. At 2.15 p. m. the *Argus*, *Seamew*, and a torpedo-boat, all belonging to the defending squadron, were sighted, and at 3.15 p. m. the whole of the defending squadron were sighted northwest by west. It is to be observed that the sea was smooth and the day exceptionally fine and clear, with little or no wind, very favorable for the patrolling gun-boats and torpedo-boats, so that it was quite impossible to get through unobserved.

When the two squadrons sighted each other they were about 15 miles apart, and the vice-admiral was 7 miles south-southeast of Hook Point, at the entrance of Waterford Harbor, with his ships in two columns, and a boat away watering the torpedo-boat, which delayed the flagship; but the remainder were at once ordered to chase southeast by east, and the *Mersey* and *Fearless* were directed to reconnoitre and report their every movement, which they did very effectively, giving most valuable information. In about twenty minutes the flagship's boats were hoisted up, whereupon she proceeded 11 to 12 knots and very soon got up to her consorts. The two squadrons were now fast closing each other, and after clearing the Barrels, the vice-admiral headed to go inside the Tuskar, which gave him a further advantage as to the course, besides a strong eddy tide to help him.

About 5 p. m., after passing the Tuskar, the vice-admiral's leading ships were about 5 miles from the enemy, but his rear ships being 2 or 3 miles astern he did not consider it prudent to separate farther from them, and eased to allow them to come up. This enabled the enemy to increase his distance. The vice-admiral was now much afraid that the enemy would escape him during the night, the relative speed of the two fleets forbidding an action before dark. Much depended upon

the *Mersey* and the *Fearless*, who had gone upon his quarters and reported his every movement and all signals made. This brings us to the commodore's only cruiser, the *Amphion*, who, most unfortunately, at 3.35 p. m., had reported that her starboard engine was temporarily broken down and could not be repaired until 10 a. m. on the following day. This reduced her speed to 10 knots.

About 5 p. m. the *Mersey* was about 5 miles on the starboard bow of her own squadron, when the commodore, thinking her exposed, ordered *Amphion* to slowly drop from her position at the head of the line to the rear and close her, so as either to put her out of action or force her back. About 6 p. m. the *Amphion* opened fire unexpectedly on the *Mersey*, who returned the fire, but was ordered to fall back. Later on the *Amphion* opened fire on the *Fearless*. With reference to this incident it is to be remarked that the *Mersey* is decidedly the more powerfully armed ship and that *Hercules* also fired on *Amphion*. In actual war *Mersey* would have suffered some damage, but whether sufficient to disable her as a steamer is an open question. It has been held that in such a position cruisers, being the "eyes of the fleet," are too valuable to sacrifice in this manner; but under the exceptional circumstances of this case the action taken was, it is considered, advisable.

The two squadrons were now steering the same course, Vice-Admiral Baird's being in single column in line ahead on the port quarter of his antagonist, about 5 or 6 miles from him, the former being much delayed by the *Belleisle*, and the latter by the *Shannon* and *Rupert*, which, if not carefully watched, might have been captured.

At 8 p. m. the commodore detached *Devastation* to harass the enemy during the night, and if possible sink *Mersey* and *Fearless*, whose incessant watchfulness was most galling, and at 9 p. m. she opened fire on *Mersey*. *Devastation* was then at a distance of, say, 3,000 yards from *Mersey*, and the effect of her fire at night must be considered very doubtful. She herself was within range of *Hercules*, who now opened fire, and with *Ajax* went up on her beam, and about 9.30 p. m. were near enough to attack her at less than 2,000 yards; the search lights had the effect of showing her up well. Being then 2 to 3 miles from her own fleet, it must be admitted that she would have been very severely handled, if not taken, in actual war, particularly as she had no excess of speed over her opponents.

At 9.30 p. m. the commodore formed his ships in starboard-quarter line and now gave up his original intention of proceeding direct to Liverpool, as the *Mersey* and *Fearless* on his port quarter reported his every movement and prevented him from altering his course unobserved. He therefore kept on, hoping to draw the vice-admiral round the Isle of Man and thence to get away to Liverpool. At 11.40 p. m. he resumed line ahead, but at 1.25 a. m. on the 3d the *Rupert*, being unable to keep station, had to haul out of the line to clear out fires, and speed was reduced to 8.5 knots.

At 4 a. m. the squadron formed in two columns, and at daylight the two fleets were about 6 miles apart, southwest end of the Isle of Man bearing northeast 18 miles from *Hercules*. At 7 a. m. the commodore was going 9.5 knots, and altered course to gradually round the northern extremity of the Isle of Man instead of making for the north channel, which was his only way to escape.

About 9 a. m., finding escape impossible, as the vice-admiral had been coming up fast, the commodore determined to make a running fight of it toward Liverpool, covering the retreat of the slow ships *Rupert* and *Shannon* with the *Edinburgh*, *Neptune*, and *Devastation*, which would engage the three leading ships of the vice-admiral, *Hercules*, *Ajax*, and *Invincible*, *Belleisle* and *Hotspur* being some way astern.

At 9.30 a. m. the nearest iron-clads were only 3 miles apart, and shortly after the action commenced, which was continued until 11.30 a. m., when the vice-admiral having shown it was in his power to force an action according to the rules laid down, signaled to cease fire and the two fleets proceed in company to the southward.

PROCEEDINGS OF "C" SQUADRON.

At daylight on July 25 the C squadron, under the command of Commodore Markham in the *Active*, left their anchorage off Stokes Bay to proceed to the northwest

coast of Ireland for the protection of commerce and to carry out a series of operations in the Irish Channel. The squadron consisted of the *Active, Rover, Volage, Calypso, Inconstant,* and *Arethusa.*

Rules for the guidance of the squadron:

1. The identity of a British vessel is, if possible, to be established by the name on hull, but no vessel is to be stopped or boarded.

2. A British vessel is to be considered as captured if the enemy's cruiser succeeds in keeping within 1 mile of her for half an hour, the cruiser subsequently stopping for one hour, this total time—one and a half hours—being intended to represent the necessary time for the examination of papers, etc.

3. If a British cruiser of superior force arrives within 4,000 yards of enemy's cruiser, while effecting the capture of a merchant vessel, before the capture has been completed the enemy's cruiser is to sheer off and endeavor to escape.

4. If a British cruiser of superior force can maintain a position within 1,500 yards of enemy's cruiser for one and a half hours, the enemy's cruiser is to be considered captured.

5. If a British force, numerically superior, can maintain a position within 1,500 yards of an enemy's cruiser for one hour, the cruiser is to be considered captured.

6. A cruiser is considered to be put out of action if she is approached within 500 yards by two or more torpedo-boats, by day or night, without such torpedo-boat having been discovered in sufficient time to enable her to have been under fire for at least three minutes.

7. Cruisers captured or put out of action, as above, are at once to cease their commerce-destroying action and proceed to their rendezvous, Portland.

8. No capture of a merchant vessel is to be effected within 2 miles of any fortified port.

9. *Volage* is to be considered equal to *Active,* but inferior to *Rover, Inconstant,* or *Arethusa. Calypso* is to be considered inferior to the *Active, Rover, Inconstant,* or *Arethusa.*

In the event of torpedo-boats attacking any of the vessels of A, B, or C squadrons, any torpedo-boat which may have approached at night any vessel within a supposed distance of 500 yards is to fire a red light from "Very's" pistol, thereby indicating that she has attained a position from which her torpedoes could be discharged with effect. The officer in command of the vessel so attacked is to note the supposed position of torpedo-boats when this signal is made.

Vessels attacked by torpedo-boats are not to use their heavy guns but are to fire blank from quick-firing and machine guns and rifles. Any torpedo-boat which is discovered in sufficient time to be under such fire for three minutes is to be considered as put out of action.

Special private signals will be supplied to the commanding officers of the opposing squadrons to enable them to distinguish friends from enemies.

Umpires will be appointed to the flag-ships of the first divisions of A and B squadrons, and also to C squadron.

Nothing of importance happened from the time of leaving Stokes's Bay to the arrival of the squadrons at their stations. Light winds were experienced in the Channel and strong head winds with a heavy westerly swell after passing the Land's End. On the wind shifting to the south off the west coast of Ireland the squadrons were put under sail, so that their subsequent movements might not be restricted by running short of coal. The *Arethusa* proved herself a very economical steamer, and her sail power quite sufficient for ordinary cruising purposes. At 9.30 p. m., on the 28th, the squadron being abreast of Blacksod Bay, the following distribution of the ships was made, in order to protect trade from that point to the north coast of Ireland.

The *Arethusa* was ordered to cruise near the entrance of Blacksod Bay in the radius of the Eagle light.

The *Calypso* to patrol in Donegal Bay as far north as Arran Island Light, the *Rover* being stationed in the radius of Tory Island light.

The *Inconstant's* cruising ground was off Inistrahull Island, though in the first instance she was to proceed to Lough Swilly to coal.

Volage to coal as rapidly as possible and relieve *Rover*.

The *Active* to coal and to occupy a central position in Lough Swilly.

The vessels parted company successively on arriving in the vicinity of their cruising grounds with orders to report fully all the vessels sighted on their beat. On the morning of the 1st, the squadron having completed with coal, the ships which had hitherto been protecting British trade from the depredations of a supposed enemy were withdrawn from their posts and assembled altogether, by noon, 10 miles to the north of Inistrahull Island.

The reports received from the various captains showed that the vessels fallen in with while on their cruising ground were very few, and those few of no great importance.

The squadron were now informed that, instead of being, as previously, a British squadron employed for the protection of Imperial interests, they had become a hostile one, meditating a descent on the towns and trade on the Clyde.

They were further informed that to bar their passage through the North Channel (the only means of access from the north of Ireland to Glasgow) a squadron of coast-defense ships and torpedo-boats had been assembled, having their headquarters at Belfast.

The object of the attacking force was, if possible, to pass into the Firth of Clyde without encountering severe opposition, as an action with the defending force, though victorious, would to a certain extent cripple the attacking squadron, thus impeding the carrying out of its main object—viz, levying imposts and capturing steamers in the river.

Shortly after noon on the 1st the *Inconstant* and *Arethusa* were sent to reconnoitre the entrance to the North Channel, and to obtain as much information as possible concerning the strength and disposition of the defending force. The remainder of the C squadron took up an anchorage for the night off the coast of Colonsay, every preparation being made for battle and resisting torpedo attacks.

The next day the *Inconstant* and *Arethusa* returned, reporting having been attacked by several torpedo-boats in the North Channel with uncertain results. On the afternoon of the 2d the *Inconstant* and *Arethusa* were again directed to proceed to the entrance to the channel, making feints of attack on the torpedo-boats during the night, with a view of preventing their crews from obtaining any rest.

At noon on the 3d, it was decided to attempt to force a passage about midnight. Commodore Markham's plan of attack appears to have been as follows: The *Inconstant* and *Arethusa* were to arrive off Rathlin Island at 11.30 p. m., where it was believed that half of the enemy's force were congregated. The *Inconstant* was to pass inside and the *Arethusa* close outside Rathlin Island, arriving at the east end at the same time, and attempting to create a diversion, with a view of drawing the torpedo-boats stationed under the Mull of Cantire toward the west side of the passage. The commodore, with the four ships, would then round the Mull, at about 11.45 p. m., and endeavor to pass up between Sanda Island and Ailsa Craig in the absence of the torpedo-boats, when the object of his squadron would have been considered as accomplished. The *Inconstant* and *Arethusa* were, after creating the diversion, to act according to circumstances, either joining the commodore inside the Firth of Clyde, or, in the event of their being too closely pursued by torpedo-boats, effecting their escape in some other direction.

At 1.40 p. m., the *Inconstant* and *Arethusa* left the squadron to carry out their instructions; the remainder of the ships, steering toward the northern entrance of the Sound of Islay and passing through it, arrived at its southern entrance at 6 p. m. The ships were now kept under the Island of Jura, so as to escape observation until

after nightfall. At 8 p. m. Commodore Markham made the signal for the squadron to start in the execution of the night's operations in single column, line ahead, where he *Active* would be leading, followed by the *Volage* and *Rover*, the *Calypso* bringing up the rear.

The weather during the night was entirely in favor of the torpedo-boats, and rendered the unobserved passage of the ships into the Irish Channel almost an impossibility. The moon was at its full, the water perfectly calm and smooth, and the night so clear that the light-houses could be distinguished several miles outside their recognized limit of visibility. However, taking advantage of whatever shadow was thrown by the land, the vessels were steered close along the west shore of the peninsula of Cantire at a moderate rate of speed. The squadron was put at full rate of speed at 11.20 p. m., when about five miles from the Mull light-house.

At 11.30 p. m., much anxiety was evinced for some indication of the attack having been commenced on the *Inconstant* and *Arethusa* in the direction of Rathlin Island. No signs of any firing, or of any disturbance taking place, could be observed in that direction. At 11.45 p. m., the *Active* being close up to the Mull of Cantire light-house and well in under the land, a torpedo-boat was reported on her starboard bow. The vessels were kept on the same course, and a furious fire was immediately opened upon this single boat both from the *Active* and *Volage*. The torpedo-boat rapidly crossed to the port bow of the *Active*, firing her first torpedo when right ahead. She then ran down the line and made a second shot at the *Active* when four points on her port bow, a third at the *Volage* when abeam of that ship, while a signal indicating the discharge of a fourth torpedo was made when abeam of the *Rover*, before the torpedo-boat finally vanished in the darkness.

This torpedo-boat was exceptionally well handled, and succeeded in firing her torpedoes both into the *Active* and *Volage* within the prescribed limits both of time and distance, which had previously been agreed upon as denoting a successful attack. Being, however, unsupported by any other torpedo-boat, this single attack could not be considered sufficient to put any of the ships out of action; the squadron therefore proceeded.

A feeling now appeared to be gaining ground that no further opposition would be encountered by the squadron before Sanda Island was reached, and the passage considered forced. But about half an hour afterwards the *Gorgon* was discovered in Sanda Sound. Fire was immediately opened upon her by Commodore Markham, which was not, however, replied to by that ship for some three or four minutes.

As the *Gorgon* was approached a most determined torpedo attack was made upon the squadron by torpedo-boats coming from every direction. From the starboard bow of the *Active* a boat was reported; another, rushing out from under the protection of the *Gorgon*, attacked the *Volage*; more were seen firing their "Very's" lights in close contact with the *Rover* and *Calypso*, while at the same time a violent fusilade was being poured into them from each ship in the squadron. The attack had now become so serious that the commodore relinquished the attempt to force his passage up the Clyde, and endeavored to escape with his squadron to the southward into the Irish Channel.

About this time the *Inconstant* and *Arethusa*, which had carried out their orders without, however, having succeeded in drawing off the attention of the enemy, were seen about 2 miles off in the direction of Rathlin Island; they were quickly discovered by the torpedo-boats, which proceeded to attack them. A sort of running chase ensued, with uncertain results, until 1.20 a. m., the boats gradually dropping off, the action ceased. The squadrons were reformed, and proceeded to the southward to rendezvous off the Mull of Galloway. This concluded the first part of the operations.

The next morning, August 4, off the Mull of Galloway, the whole of Commodore Markham's squadron resumed their nationality as English cruisers, with the exception of the *Volage* and *Calypso*, who still retained their rôle of enemy's ships bent on the destruction of British commerce in the Irish Channel.

At 9 a. m. the commodore made the signal to those two ships to part company, to take four hours' start at full speed, and then to do their worst; warning them that they would be hotly pursued not only by his own squadron, but also by an iron-clad fleet cruising in the Irish Channel, as well as by any of the coast flotillas provided for the protection of the commercial ports.

Both ships continued a mid-channel course to the southward until out of sight of Commodore Markham, the *Calypso* then running under the Calf of Man, intending to hide there until the chase had passed. The *Volage* steered directly for the bar of Liverpool to capture the shipping that are generally found to be waiting there at low water. There she must be left for the present, while the fortunes of the *Calypso* are followed.

While the *Calypso* was in hiding, waiting for a favorable opportunity to make a descent upon Barrow-in-Furness, the English steamer *Lake Superior*, passing on her way to Liverpool, was captured. Commodore Markham's dispositions for the capture of the enemy's cruisers appear to have been as follows: The *Inconstant* and *Arethusa* were to scour the east coast of Ireland as far as the Tuskar Light; the *Rover*, passing between the north end of the Isle of Man and the mainland, was to intercept either of the enemy's vessels attempting a retrograde movement to the north, while the *Active*, passing round the south end of the island, would reconnoitre its east coast and also bar the retreat of any vessel intercepted by the *Rover*.

During the afternoon the *Calypso* sighted the *Active* rounding the Calf of Man, and immediately fled to the north. On approaching the Bahama bank, which lies off the northeast coast of the island, the *Rover* was suddenly observed to the eastward. She at once joined in the chase, and the *Calypso*, to escape her, ran in between the shoal and the north point of the Isle of Man. The *Active* now desisted from her efforts to capture the *Calypso*, allowing the *Rover*, which is a faster ship, to follow alone. The chase now became most exciting, the *Rover* gradually gaining on the *Calypso*, who was doing her utmost to get away. Darkness coming on enabled the *Calypso*, by a clever manœuvre, to escape at this time the vigilance of her pursuer. The next day, however, returning to carry out her intentions at Barrow-in-Furness, she was caught during thick weather in a *cul-de-sac*, and, after a most exciting chase of three hours, was obliged to surrender to her old enemy, the *Rover*. Her depredations therefore ceased, and she proceeded to rendezvous at Portland, having secured several prizes.

To return to the *Volage*. After securing, off Liverpool Bar, all those vessels waiting for the tide to enter the river, she proceeded to the entrance of the Firth of Clyde, having eluded the pursuit by taking a course close in along the shore. All vessels entering or leaving the Clyde now fell an easy prey to the enemy's cruiser, who had posted herself between Ailsa Craig and Sanda Island, where she remained until 9 p. m. on the 5th instant.

Dublin Bay was next visited, where, on the morning of the 6th, the whole of the shipping at Kingstown was captured or burnt. On the afternoon of this day, only a few hours remaining before the conclusion of hostilities on the morning of the 7th, the *Volage* having secured 57 prizes of various sorts without her movements having in any way been interfered with, shaped a homeward course.

During the night of the 6th, however, she narrowly escaped capture at the hands of Commodore Markham's squadron, which was guarding the southern exit from the Irish Channel, between the Tuskar lightship and the Smalls. The *Volage*, however, eluded the *Inconstant*, by whom she was hotly pursued, owing to the great dexterity with which she was handled, assisted also by a lucky rain squall, which came on at a critical moment. She may probably claim to have been the only enemy's ship remaining uncaptured at the conclusion of hostilities.

Attacks by a torpedo flotilla, consisting of the *Rattlesnake* and twenty first-class torpedo boats, under the command of Captain Long, on the squadron which had assembled at Spithead and Portland after the operations at sea, brought the manœuvres to a close. The idea was that the iron-clads had been forced into harbor for coal

and provisions, or for some other reason, and that the enemy, having obtained this information, had taken the opportunity to attack him with his torpedo-boats.

At Spithead the defense depended entirely on the patrolling gun and torpedo-boats, and the nets of the iron-clads, backed up by the fire of the machine and quick-firing guns. The attack was well delivered at midnight, and it is possible that some of the ships might have been damaged. On the other hand, at Portland the attack was a distinct failure, as Vice-Admiral Baird had protected himself with a boom, boats and mines, which were impassable to the torpedo-boats, and resulted in the whole of them being put out of action.

APPENDIX.—*Abstract of reports of casualties to ships employed in the manœuvres between the 24th July and 12th August.*

Ship.	Nature of defect.	Time ship was ineffective.	Whether repaired by ship's artificers or dockyard.
Collingwood.	At 2 a. m., August 4. Stuffing-box of starboard H. P. cylinder was bodily driven out and all bolts distorted and wrenched away. The communication valves were leaky, so that the stuffing-box had to be wedged up to prevent the steam escaping into the starboard engine room when using the port engines.	Entirely so for three hours, then able to proceed with port engine. Anchored at Spithead at 5 p. m. on Saturday, the 6th; repairs completed to starboard engine by noon on the 8th.	Ship's artificers after bush was obtained from dockyard.
Inflexible..	At 4.50 p. m., July 26. Steam steering gear temporarily disabled, but was repaired by 5.50 p. m.	Not at all; hand gear was used.	Ship's artificers.
	At 5.35 a. m., August 4. Stopped to repack gland of starboard H. P. piston-rod, and to patch up joint of starboard H. P. cylinder cover.	Two and one-third hours port engines, three and one-third hours starboard engines.	Ship's artificers.
	Stop-valves so defective that port engines could not be used.		
Sultan.....	At 5.35 a. m., August 4. *Sultan* asked permission to stop for half an hour to repack valve.	Half an hour.....	Ship's artificers.
Conqueror.	Slight damage to beams while firing heavy guns.	Not at all.....	Not repaired.
Curlew	5th August. Boiler tubes required to be referruled.	Fortnight, ordinary working hours.	Dockyard.
Rattlesnake.	27th July, 7 a. m. Reported defects in starboard engine which would take six hours to complete.	.....	Ship's artificers.
	27th July, 10 a. m. L. P. head eccentric of starboard engine working loose on shaft.		
	12.5. Proceeded for Portsmouth Harbor to make good defects.		
	28th July, 6 p. m. Rejoined flag off Portland.		
Bulldog....	Fouled screw, and unable to move starboard engine.	Put into Plymouth Sound at 8 a. m. and left at 11 a. m.	Ship's artificers.
Fidget.....	On the 28th, gurpit got full of water while in tow of *Hydra* and was sent into Falmouth, which she left on the 30th.	Some hours.....	
Edinburgh.	10 p. m., 26th July. Some teeth of spur wheel of steering engine carried away, caused by one dropping out of gear and allowing the pinion to ride over the others.	Not at all; hand-gear used; repaired in twenty hours.	Ship's artificers.
Neptune...	31st July, 6.40 p. m. Stopped to repack trunk gland.	Three hours, but subsequently reported that "extraordinary watchfulness and enormously increased lubrication were necessary."	Ship's artificers.
Rupert	A crack which had developed in one of the boilers was patched up in about twenty hours at Berehaven, while coaling.		

Casualties to ships, etc.—Continued.

Ship.	Nature of defect.	Time ship was ineffective.	Whether repaired by ship's artificers or dockyard.
Amphion ..	At 7.35 p. m. 31st July. Starting gear failed to act for some time.		
	3.30 p. m., 2d August. Starboard engine broke down altogether, owing to the nut of the air-pump rod starting back sufficiently to strike the manhole door, at the same time drawing the rod out of the piston; at the return stroke the pull of the piston broke the air-pump rod, the nut with the broken piece of rod fell into the cylinder, and then on being struck by the piston deflected it, bending the piston-rod.	Necessary to return into port.	Dockyard.
	9.50 p. m., 2d. Stopped port engine for about two hours to prevent similar accident to that which occurred with starboard engine.	Partially in two hours, but never entirely effective.	Temporarily by ship's artificers.
	3.30 p. m., 4th. The fire engine and main bilge-pump discharge-valve box, through which the separator discharges, burst.	.....	Hole temporarily plugged by ship's artificers.
	2 a. m., 3d. The dynamo machine broke down entirely.	.....	Requires repair by dockyard.
Mohawk...	9 a. m., 31st July. Both H. P. piston-rods required repacking, and connecting-rod ends re-adjusting.	Eight hours	Ship's artificers.
	5 p. m., 1st August. Eccentric of foremost engine broke.	Ordered to proceed into harbor.	Requires repair by dockyard.

Casualties to torpedo-boats.

Boat.	Nature of defect.	Time boat was ineffective.	Whether repaired by own artificers or by dockyard.
No. 26	Foremost steering gear broke down on 26th July, chain slipped round sprocket wheel.	*Nil*	Artificers of boat.
No. 28*	Non-return feed-valves on boiler leaking on 2d August.	Fifteen hours; time taken to repair.	Artificers of boat.
No. 30	Fire in bunker, owing to wood flooring abreast ash-pit having ignited on 9th August.	One hour	
	Propeller blades lost through grounding on 11th August.		
No. 36	Weed-trap choked one-half hour on 25th July. Weed-trap choked, and 3 studs of cover broken on 28th July, one hour.	One and one-half hours.	Artificers of boat.
	Brazing of forward feed-pipe; failed on 28th July.	Four hours.....	Pembroke dockyard.
	Bunker lid knocked overboard (material for new one supplied from depot ship) on 30th July.	Four hours.....	Artificers of boat.
	Brazing of forward feed-pipe; failed on 30th July.	Four hours.....	London and N. W. R. Co.
	Pipes leading to pressure gauges gave out on 7th August.	Two hours.....	Pembroke dockyard.
	Steering-engine bracket distorted on 10th August.	.....	Not repaired.
	Water-service pipes of low-pressure crank-head broken, 10th August.	Two hours.....	Devonport yard.
	Pipe leading to press-gauge of boiler gave out.	.....	Not repaired.
	Feed-pipe of boiler broken from flange..	One hour.....	Artificers of boat.
No. 37	Steam steering gear broken on 7th August.	Ten minutes, while hand-gear was connected.	New cylinder and spindle, since made by Pembroke dockyard.
No. 38	Drain-cock and pipe blown off separator on 28th July.	Two hours.....	Artificers of boat temporarily, Pembroke dockyard finally.
	Low-pressure cylinder cover cracked through the nut on top piston-rod working loose on 7th August.	Two hours, five minutes.	

* Able to steam 12 knots with defect.

Casualties to torpedo-boats—Continued.

Boat.	Nature of defect.	Time boat was ineffective.	Whether repaired by own artificers or by dockyard.
No. 42*	(1) Starboard feed-pipe to boiler burst on 7th August; (2) Dynamo broke down after attack at Portland, 12th August.	.....	1. Dockyard, Devonport; 2. Artificers of boat.
No. 45†	Auxiliary steam-pipe gave out on two occasions (2d and 5th August).	*Nil*	1. By "Gorgon"; 2. By Pembroke dockyard.
No. 49	Differential valve of foremost steering-engine gave out on 2d August; leaky joint of feed-pipe on 3d August.	Forty-five minutes....	Artificers of boat.
No. 51	Flange of whistle-pipe blew off on 25th July.	Six hours.....	Dockyard artificers.
No. 52	Two bricks of bridge in furnace fell in. New bridge built on 28th July.	Four and a half hours.	Pembroke dockyard.
	Port main feed-pump rod broken on 11th August.	Three and a half hours	Boat's artificers and dockyard.
No. 53‡	Partial collapse of fire bridge	*Nil*	Artificers of boat.
No. 54	Propeller damaged; new one shipped 26th July.	Six hours.....	Dockyard, Portsmouth.
	Furnace bridge rebuilt, 30th July.....	Fourteen hours.....	
	Starboard feed-pipe burst, 4th August..	Three hours.....	Sheerness dockyard.
No. 55	Leak in main feed-pipe, 1st August	.....	Devonport dockyard.
	Gland of low pressure cylinder required repacking, 26th July.	Thirty-five minutes.	Artificers of boat.
	Weeds fouled circulator on 12 August...	Ten minutes.....	
No. 58§	Bush to piston of fan engine broke on 7th August.	.....	Devonport dockyard.
	Leak in branch of auxiliary steam-pipe leading to condenser on 12th August.	.....	Artificers of boat.
No. 59.....	Bush of fan engine bruised by gland being blown out about 9th August.	Three fourths of an hour.	Temporarily in boat; finally in Devonport dockyard.
No. 60.....	Pin connecting slide rod to valve of circulating engine sheared on 2d August.	Thirty minutes.....	Artificers of boat.
No. 61	Inspirator faulty, cleaned and made joints on 5th August.	*Nil*	Artificers of boat.
	Filling cock to boiler ground in and repacked on 10th August.		
	Steering gear made good on 9th August and 3 joints on main steam-pipe re-made 12th August.	*Nil*	Dockyard.
No. 63‖	Nut of piston-rod of fan engine worked off, piston-rod damaged on 27th July.	*Nil*	Repaired by "Glatton.
	Flange on boiler of safety-valve box started, 4th August.	Forty-eight hours	Sheerness dockyard.
	Joint of main steam-pipe required rejointing, 4th August.		
No. 70.....	Tips of propeller blades slightly bent through touching ground on 13th August.	*Nil*	
No. 72.....	Screw for tautening chains of steering gear caught in fairlead on deck on 25th July.	Ten minutes.....	Artificers of boat.
	Fire in starboard coal bunker due to wooden flooring on 28th July.	One and a half hours .	By "Tay" and "Sabrina" artificers.
	Boiler losing water, due to main feed-valve being jammed on 3d August.	Two hours.....	Artificers of boat.
	Fire bridge in furnace came down.....	Three hours	Artificers of boat.
	Serious fire in fore stokehole and starboard coal bunker, due to wooden flooring, on 12th August.	Prevented joining in attack on Portland.	

* Did not affect engines.
† Could not proceed further than Pembroke.
‡ Repaired while in harbor.
§ Repaired in harbor.
‖ Boat able to proceed without forced draught.

CONCLUSIONS.

(1) The necessity of signal stations at prominent headlands in telegraphic communication was demonstrated by the manœuvres of the A squadron.

(2) It was evident that greater facilities for communicating with the defending division were also necessary, especially during the first night, when telegrams received at Portland at 2.42 a. m. were not delivered to the Vice-Admiral until four hours later; only seven hours then remained to reach Falmouth, 110 miles distant, before the enemy had destroyed it by ten hours' occupation in daylight.

(3) The value of "scouts" as eyes of the squadron was distinctly emphasized, and the necessity of at least two more scouts in each division of the armored squadrons was indicated by these manœuvres. Those of the defending division of A squadron were both absent at a critical time, and the *Curlew* broke down and was unable to serve as lookout vessel off the Foreland. The accident to the *Mohawk* crippled the attacking division of B squadron, so that it had no notice of the location of the defending division, which it encountered at the beginning of hostilities. The services of the *Mersey* and *Fearless* contributed more to the defeat of the attacking division than those of any of the other vessels.

(4) The value of twin screws was indicated by the fact that the *Collingwood* was able to continue her route with one screw after one engine was disabled; by the *Amphion*, which continued to operate in the B squadron with one engine disabled; and by the *Mohawk*, which was able to steam to port with one screw, though she was not able to maintain a speed of 10 knots.

(5) The speed of the vessels, whenever mentioned, never equaled the maximum trial speed obtained in the original trial and given in the table.

(6) The chase of the *Mercury* by the *Impérieuse* illustrates the advantages of forced draft in an emergency.

(7) The failure of the D flotilla to delay the enemy in the Straits of Dover and the defeat of the C squadron by the G flotilla off the Firth of Clyde demonstrate that rapid approach is necessary for torpedo attacks. The attacking division of the A squadron passed through the Straits of Dover at 10 knots, and the torpedo-boats approached for the most part from abeam; therefore leaving them exposed to fire long enough to be destroyed. The cruisers of the C squadron were at full speed, probably about 13 knots, and the G flotilla steamed towards them at about 17 knots, making the rate of approach about 30 knots, or three times faster than was the case in the Straits of Dover.

(8) The operations of the *Volage*, acting as a commerce destroyer, and her skillful escape from so many pursuers illustrates the great

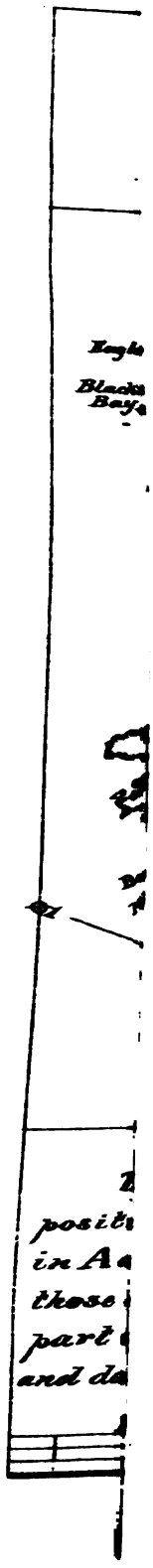
Eagle
Black
Bay
posit
in A
those
part
and da

difficulty of catching an "*Alabama.*" The *Volage* was one of the slowest vessels in the C squadron, and her success indicates that a very fast modern cruiser may in future wars be even more successful than any commerce destroyer mentioned in naval history.

(9) A condition wherein an inferior force may be ignored was exemplified by the manner in which the attacking division passed the D flotilla (see pages 126 and 132). It is conceded that the D flotilla could have been destroyed; but this would have caused a delay of two hours, which would have reduced the stay during daylight at the Nore before the expected arrival of the defenders to less than ten hours.

(10) Strategy was well illustrated by the brilliant manœuvre in the East Swin, when Admiral Fremantle drew his pursuers along the Black Deep channel, in which they could not turn, and then ran back and crossed the shoals at such a state of the tide that by the time they arrived the water was too low to permit their following in immediate pursuit.

MANŒUVRES IN THE NEIGHBORHOOD OF PORTSMOUTH.

A number of manœuvres were undertaken by English torpedo-boat flotillas which illustrate some of the technical questions in relation to torpedo-boats.

A flotilla of twenty-four torpedo-boats was assembled at Portland on the 12th of May and conducted a series of manœuvres for a period of about two weeks. Details of these manœuvres have not been published in full, but evidently they were not successful. Eleven of the torpedo-boats were so badly injured by weather and accident that they required extensive repairs. In one series there was a speed trial of all the boats for a run of 88 miles; the fastest boat made only 17.75 knots, and while running at this speed the crown sheet of the boiler collapsed, killing three and wounding two of her crew. Another boat had a similar accident, though it did not cause loss of life. The cause of the accidents was ascribed to the neglect of the fireman in allowing the water in the boiler to get too low.

Experiments were made in Bighi Bay, 26th and 27th May, to ascertain the effect of a torpedo-boat's charging a boom made of two baulks of timber 1 foot square and 35 feet long; the baulks were laid side by side and lashed by two parts of 6-inch steel-wire hawser. A 65-foot torpedo-boat cut through both baulks at a speed of 12 knots without injury. On another occasion the boat jumped a boom made of four baulks without injury, but a second trial at the same speed carried away her rudder-head.

Immediately after the grand manœuvres in August the A squadron anchored in Spithead and, assisted by gun-boats, torpedo-boats, etc., arranged a defense against a flotilla of twenty torpedo-boats and the *Rattlesnake*, under the command of Captain Long. In these operations the two divisions of armored vessels of the A squadron were anchored in double column. The *Archer* anchored outside of Spithead entrance to the eastward, and a line of gun-boats formed a chain of guard-ships clear across from the *Archer* to Langston Bar. Patrols of four first-class torpedo-boats, four second-class torpedo boats, and eight steam cutters cruised in parallel lines inside of the gun-boats and four miles from the armored vessels. At the western entrance of the Solent there were two first-class torpedo-boats as pickets, well out to seaward; a chain of two first-class and two second-class torpedo-boats and three steam-cutters on a second line, and a third chain of gun-boats across the western side of the harbor. Two gun-boats and Fort Gilkicker illuminated the three sides of the square by beams of electric light, so that no hostile torpedo-boat could cross within the square without being observed and attacked before getting within torpedo range of any of the armored vessels.

The attacking flotilla of torpedo-boats was divided into three divisions. The first, of three boats, made a feint to attack the fleet by way of the western entrance, while the other two divisions crept along the north and south sides of the eastern entrance. The *Rattlesnake*, disguised by false bow and superstructure, extra funnels, and different rig, boldly entered as a merchant vessel, and directed the movements. She was, however, recognized notwithstanding her disguise.

The eight boats which entered by the south shore of the eastern entrance were promptly discovered, and an engagement ensued with the patrolling boats, which drove four on the shoals and captured the others. Some of the topedo-boats managed to fire their torpedoes, but it was decided that they could not have entered the harbor without serious injury. The attack failed completely. The *Inflexible*, *Monarch*, and *Impérieuse* used their electric search-lights, and caused confusion thereby rather than any assistance in repelling the attack.

These operations did not solve any of the problems of torpedo warfare, but served to give the officers and men drill and familiarity with the weapons. Buoys of the size and shape of Whiteheads were used instead of torpedoes. All the rules governing torpedo-boat manœuvres as laid down in the operations of the A, B, and C squadrons were adopted for this series.

In October, after a great deal of preparation there were a series of operations at Langston Harbor entrance, near Portsmouth. Great secrecy was observed, especially in relation to the Brennan torpedo.

The entrance to the harbor of Langston is 200 yards long and quarter of a mile wide, and there is a dangerous shoal just outside. A fleet of

vessels was supposed to have taken refuge within the harbor, and a flotilla of gun-boats, torpedo-boats, etc., attacked the defenses at the entrance. These defenses consisted of three lines of submarine mines across the entrance, a boom of timber baulks lashed with wire rope and securely anchored by boat anchors, in connection with mines in the center, and batteries of machine and rapid-fire guns in earthworks on both shores. Six powerful electric search-lights were also used to render an unobserved approach of the attacking force impossible.

Captain Long's flotilla of seven gun-boats, six torpedo-boats, two lighters, loaded with 500-pound gun-cotton countermines, sufficient to clear a mine area of over 200 yards square, steam-launches, and one smoke-producing raft approached at 9 p. m., October 18, favored with a strong tide. Several of the boats stuck in the boom and were exposed to fire long enough to put them out of action. Other boats succeeded in cutting the submarine mine cables and destroying the boom, while the explosion of countermines cleared a channel to admit the attacking flotilla. There was, however, dispute about the result and it was necessary to inspect the mine field subsequently in order to judge if the boats had forced a passage. The result of this inspection and the manner in which the smoke-producing raft was used, and the degree of protection it afforded to the attacking flotilla, have not been published.

MANŒUVRES OF THE BRITISH MEDITERRANEAN SQUADRON.

A series of operations was conducted by this squadron in the middle of April at Argostoli, Livathi Bay, island of Cephalonia, Greece.

The squadron consisting of the *Alexandra*, *Dreadnought*, *Thunderer*, *Colossus*, *Téméraire*, *Polyphemus*, and *Hecla* anchored at the head of Livathi Bay and secured the anchorage by torpedo nets, observation and electro-contact mines. Search-lights on headlands on shore were worked by dynamos on board the ships. The *Scout*, *Condor*, and eight torpedo-boats, hoisted out by the *Hecla* and other ships, formed the attacking flotilla.

Picket-boats were sent out by the defending division, and at 10.30 p. m., 13th of April, they signaled the approach of the attacking torpedo-boats, which were distinguished by the ripple at their bows, while the noise of the same was distinctly heard for three-quarters of a mile. The search-lights revealed the flotilla, and the squadron poured in a heavy fire from rifles, machine, and rapid-fire guns. The torpedo boats pushed on and discharged several torpedoes, all of which were brought up by the nets. Operations were then brought to a close.

The next day the *Téméraire* traversed the mine field and found most of the mines inefficient. The mines had been laid down too hastily.

Details of the vessels of the British Mediterranean squadron are given in the following table :

Vessels in the manœuvres of the English Mediterranean squadron, 1887.

Name.	Type.	When completed.	Displacement.	Indicated horse power.	Trial speed.	Remarks.
Dreadnought	Armored turret	1879	10,820	7,906	14.2	
Alexandra	Armored broadside	1877	9,490	8,610	15.	Flagship.
Thunderer	Armored turret	1877	9,330	6,270	13.4	
Colossus	do	1886	9,150	9,488	16.5	
Téméraire	Armored barbette	1877	8,540	7,520	14.6	
Agammenon	Armored turret	1883	8,510	6,360	13.	
Hecla	Torpedo depot vessel.	1878	6,400	2,265	13.2	
Polyphemus	Torpedo vessel	1886	2,640	5,780	17.8	Ram.
Scout	do	1886	1,600	3,200	16.	
Surprise	Dispatch vessel	1886	1,400	3,000	17.	
Gannet	Cruiser	1879	1,130	1,110	11.5	
Dolphin	Gun vessel	1884	925	750	10.5	
Condor	do	1877	780	770	10.9	
Albacore	do	1884	560	660	11.	
Imogene	Dispatch vessel	1884	460	420	16.5	
Torpedo-boat No. 21	Thornycroft, 113 feet.	1885	60	730	19.9	
No. 22	do	1885	60	730	19.9	
Eight second-class boats.	Thornycroft, 56 feet.	1884	12	150	15.	Carried by ships.

In October more elaborate operations were carried on in the neighborhood of Argostoli. For these a definite programme was announced, giving the following general idea: The fleet, consisting of the *Alexandra*, *Dreadnought*, *Agamemnon*, *Thunderer*, *Gannet*, and *Surprise*, was ordered to engage in operations against an enemy's ports in the Adriatic; the *Colossus* and *Hecla* were ordered to form a coaling depot at Argostoli. The enemy's light cruisers—the *Dolphin*, *Polyphemus*, *Scout*, *Albacore*, *Imogene*, and torpedo-boats 21 and 22 were to do all in their power to harass the fleet and prevent its coaling, by blockading its depot with mechanical mines and, if possible, by destroying its defenses.

The dates when ships should put to sea, stores to be supplied by one part of the force to the other, and a set of rules to be observed were all minutely ordered. War was declared at noon on October 10.

The *Colossus* and *Hecla* established defenses at Argostoli. They were anchored in a position to maintain electrical connection between their dynamo-machines on board and electric search-lights on shore. Signal stations were established on the convenient heights, submarine mines were laid to cover the area of the anchorage, leaving room, however, for the ships of the fleet to enter and anchor if they should have repulsed the enemy on their way to Argostoli from Corfu. Observation

mines only were used because it was necessary not to obstruct the navigation of the port, in which the manœuvres were conducted by the courtesy of the Greek Government. Machine guns and electric lights with projectors were landed and masked by rocks and bushes. Huts were erected and carefully concealed to shelter electric batteries and instruments, and men detailed to operate the observation mines. Electric cables were brought from the mines to these huts and a number of old pieces of cable were laid out on the beach as shams to delude the enemy in attempts to cut the cables.

The enemy had mines hung around his cruisers, ready to drop and block the channel, that the fleet might not be able to enter the depot. Everything white was blackened in order to be as invisible as possible in the electric light. Masts and yards were sent down and ships all cleared for action by noon on October 10.

The armored fleet went to Corfu and made preparations for hostilities; the ships were prepared for action, torpedo nets rigged, and a construction of spars, chains etc., fitted on the cut-waters, resembling a locomotive's cow-catcher, for service in passing through an enemy's field of mechanical mines.

At 2 p. m., October 10, the enemy's torpedo-boats Nos. 21 and 22 came in sight of the *Colossus* and *Hecla* at Argostoli. A battery on shore opened fire on the torpedo-boats at 3 p. m. and they withdrew. At 4 p. m. the *Polyphemus* and No. 22 appeared off the entrance. The *Colossus* opened fire on the latter at long range from Hotchkiss and 6-pounder rapid-fire guns. Two second-class torpedo-boats, of which the defense had six, designated by A, B, C, D, E, and F, dashed out from behind the break-water to cut off No. 22. These engaged with rifles to represent machine-gun fire. (Blank cartridges are not allowed to be fired from machine guns.) No. 22 was obliged to retire, but was not pursued on account of her superior speed. The *Polyphemus* also retired.

In order to disconcert any plan the enemy might have based upon the knowledge gained by this reconnoissance, the *Colossus* shifted her anchorage to near the mouth of the harbor after dark.

The enemy appeared again between 9 and 10 p. m. and was discovered by the glare of his own search-lights which he used to detect the location of the defending torpedo-boats. One of these, E, made the signal for firing a torpedo when unperceived and close to the *Polyphemus*, which was put out of action. The whereabouts of the torpedo-boat was first discovered by the forcible language of one of her crew, exasperated at the frequent failures to ignite the blue light, the signal for having fired a torpedo. Silence was shown to be as necessary as obscurity for successful torpedo attack.

The *Colossus* fired several rounds at a ship which she claimed to have put out of action. At midnight No. 21 made a skillful attack on the *Colossus*, but as the latter had her torpedo nets down she was, under the rules, not subject to be put out of action by torpedoes. At about

2.15 a. m., October 11, there was an engagement between E, F, and D and one of the enemy's torpedo-boats, but the result was disputed.

The enemy again came in to attack on the night of the 11th, and the second-class boats A, B, and E attacked the *Albacore*, and claim to have put her out of action. A and B also attacked the *Scout*. The *Polyphemus* was again seen after midnight, by means of the *Hecla's* electric search-light on the hill station. The *Colossus* saw her from her original anchorage which she had resumed, and fired 9 shots, upon which the *Polyphemus* hoisted the signal as being out of action and withdrew. The *Scout* was observed by the *Hecla's* picket boat and shown up by the electric light. She was fired upon, but advanced to the outer line of the mines. The mines were not exploded, because the operator considered the *Scout* as out of action when the firing ceased, but on this occasion the *Scout* was acting as a ram instead of a light cruiser. The *Scout* lowered a blackened boat and attempted to damage the mine field by "creeps." Subsequent examination of both the real and dummy cables showed that neither had been injured, and it is probable that the "creeps" were caught in the numerous rocks at the harbor entrance.

The hostile torpedo-boats next attacked the *Colossus*, but this attack was disregarded as she had her torpedo nets down.

While the *Polyphemus* and *Scout* were operating with the torpedo-boats against the passive defenses of the harbor, the other hostile vessels planted mechanical mines in the outer channels to prevent the entrance of the fleet. The defending torpedo-boats were employed to impede this work.

After these preparations the enemy endeavored to harass the fleet on its way to Argostoli. In the afternoon of October 13, the *Scout* and No. 22 were seen reconnoitering the fleet from the southern end of Corfu Channel. The weather was bad with rain and high wind in squalls. Two of the second-class torpedo-boats (carried by the fleet) were intended to serve as scouts for the armored vessels, but the sea was so high that they could not have lived in the channel. It was hoped that the state of the sea would prevent operations by the enemy's first-class torpedo-boats, but this proved illusory. The squadron separated; by being together the vessels afforded a larger target for the hostile torpedo-boats, and did not appreciably contribute to the defense. The commander-in-chief therefore sent the *Dreadnought* and *Thunderer* to the westward of Paxo Island at 4.30 p. m., while the *Agamemnon* and *Alexandra* went direct at 7.30 p. m., so that all should rendezvous outside of Argostoli. Lights were masked, but ready to show in case of being required for navigation.

The night was black and dirty, with heavy rain-squalls. The watch on deck were at the guns and no lights were visible. The red and green lights of a vessel were seen by the *Alexandra* about 9 p. m. and the guns trained on her until she was out of sight. The electric search-lights were not used, because they would have betrayed the ship. It was sub-

sequently ascertained that these lights were those of the *Polyphemus* which did not see the *Alexandra*.

At 10 p. m. a first class torpedo-boat was seen 150 yards abeam of the *Alexandra*. A blue light was ignited at the same instant, and the torpedo put the *Alexandra* out of action. The *Agamemnon* then opened fire on the torpedo-boat, which, however, had been only revealed by the obligation to burn the blue light. The torpedo-boat could have escaped or even have launched a second torpedo at the *Agamemnon* if her position had not been revealed by the blue light.

Fresh combats took place near Argostoli early in the morning of October 14. At daylight the *Dreadnought* engaged the *Scout*, which escaped towards the land. At 6.15 a. m. the *Scout* turned to attack the *Alexandra*, in the hope of firing a torpedo before being put out of action. This attack failed, as the *Agamemnon* and *Alexandra* opened a tremendous fire and claim to have destroyed the *Scout*. The *Dolphin* and *Albacore* met the same fate at the hands of the *Dreadnought* and *Thunderer*.

When the squadron entered the harbor channel the *Polyphemus* was sighted and the *Dreadnought* went to destroy her. The destruction of the enemy was considered complete, and all united and entered the harbor at noon in tactical formation.

During that night eight torpedo-boats attacked the fleet at anchor and demonstrated the value of the torpedo-nets, as none of the torpedoes passed through.

During the following week the defenses of the coaling depot were removed and the results of the manœuvres clearly established by careful investigation of all details.

REMARKS.

(1) All the operations of the English torpedo-boats were conducted on or near the coast. Long sea-voyages or distant operations were not undertaken.

(2) The numerous casualties to torpedo-boats, especially in the flotilla of twenty-four boats at Portland in the middle of May, indicate weaknesses, which, if not remedied, would materially lessen their efficiency in war.

(3) Torpedo-boat attacks failed in the operations at Spithead, August 12, after the grand manœuvres, at Argostoli in April, and on several occasions at Argostoli in October. In these cases the defending vessels were at anchor, protected by picket-boats, gun-boats, electric search-lights, and torpedo-nets. These manœuvres indicate that a squadron at anchor in a harbor may readily arrange a perfect defense against torpedo-boats.

(4) The successful attack of No. 21 on the *Alexandra* in the Corfu Channel was of the same character as those in the North Channel by the G flotilla against the C squadron. The success was due to the fact that the torpedo-boat and vessel attacked approached each other at high speeds. Their rate of approach was probably greater than 30 miles an hour.

(5) The speed of the torpedo-boats was at least 2 or 3 knots less than the original contract maximum trial speed given in the table.

(6) The torpedo-nets were found to afford perfect defense against torpedo attacks.

(7) The naval defenses at Argostoli illustrate the efficiency of a naval harbor defense by mines, electric lights, and defending torpedo-boats.

FRENCH.

A squadron of armored vessels, cruisers, and torpedo-boats were assembled at Toulon in March and April to participate in the naval manœuvres.

The chief object was to establish the efficiency of torpedo-boats, and nearly all the available boats were sent to Toulon. Ten were fitted out in Atlantic ports, one of which, No. 67, was sunk in collision off port San Martinho, Portugal, while en route. The crew were saved.

List of vessels taking part in the French naval manœuvres, 1887.

Name.	Type.	When launched.	Displacement.	Horse-power.	Max. trial speed.	Remarks.
Duperré	Armored barbette	1879	10,487	6,075	14.5	
Courbet	do	1882	9,652	6,016	15.6	
Dévastation	do	1879	9,639	8,320	15.2	
Redoutable	do	1876	8,858	6,071	14.7	
Colbert	do	1875	8,457	4,652	14.5	
Trident	do	1876	8,456	4,882	14.2	
Richelieu	do	1873	8,417	4,006	13.1	
Suffren	do	1870	7,397	4,181	14.3	Subsequently omitted.
Indomptable	do	1883	7,168	6,000	14.5	
Annamite	Transport	1876	5,623	2,318	13.2	
Sfax	Cruiser	1884	4,488	6,400	17.5	
Villars	do	1879	2,268	2,380	14.6	
Dupetit Thouars	do	1874	1,962	2,018	15.1	
Seignelay	do	1874	1,915	1,967	15	
Desaix	do	1866	1,683	1,442	14.2	
Milan	do	1884	1,550	4,132	18.4	
Condor	Torpedo vessel	1885	1,240	3,600	18	
Couleuvrine	do	1885	321	2,000	18	
Hirondelle	Dispatch vessel	1869	1,036	1,780	15.6	
Torpedo-boat No. 26	French Thornycroft	1882	44	500	19	108 feet long.
No. 27	do	1882	44	500	19	Do.
No. 28	do	1882	44	500	19	Do.
No. 60	Normand	1882	46	500	20.5	Do.
No. 61	do	1882	45	500	20.5	Do.
No. 62	do	1882	45	500	20.5	Do.
No. 63	do	1882	45	500	20.5	Do.

List of vessels taking part in the French naval manœuvres, 1887—Continued.

Name.	Type.	When launched.	Displacement.	Horse-power.	Max. trial speed.	Remarks.
Torpedo-boat No. 64.	Normand	1882	45	500	20.5	108 feet long.
No. 65.	do	1884	49	500	20.5	Do.
No. 66.	do	1884	50	500	20.5	Do.
No. 67.	do	1884	50	500	20.5	Do.
No. 68.	do	1884	49	500	20.5	Do.
No. 69.	do	1886	49	550	20.5	Do.
No. 70.	do	1886	50	550	20.5	Do.
No. 71.	do	1886	50	550	20.5	Do.
No. 72.	do	1886	50	550	20.5	Do.
No. 73.	do	1886	49	550	20.5	Do.
No. 74.	do	1886	49	550	20.5	Do.
No. 90.	do	1887	54	.....	20	115 feet long.
No. 100	do	1887	54	.....	20	Do.
Balny	Deep-sea type	1886	67	600	20	135 feet long.
Deroulède	do	1886	67	600	20	Do.
Doudart de Lagrée	do	1886	67	600	20	Do.
Gabriel Charmes	Special type	1886	74	560	19	132 feet long.

A number of the vessels were not ready until May, and a series of preliminary evolutions were conducted by a flotilla of torpedo-boats and vessels.

The flotilla, under the command of Rear-Admiral Brown de Colstoun chief of the staff of the Minister of Marine, consisted of the *Desaix Seignelay, Villars, Dupetit Thouars, Annamite,* and 16 torpedo-boats, viz: Nos. 26, 27, 28, 60, 61, 62, 63, 64, 65, 66, 68, 69, 70, 72, 73, and 74.

The flotilla left Toulon at 2.30 p. m. 19th April for Algiers. It was then clear, calm, and pleasant, but a fresh breeze from east to east-northeast sprang up during the night, and the next morning increased with considerable sea. About 9 a. m. the sea became very rough, and the torpedo-boats rolled and pitched deeply. At this time Nos. 27 and 28 signaled that they wanted coal. The *Annamite* endeavored to coal No. 28, and in the course of one hour managed to give her two tons of coal with great difficulty.

The torpedo-boats were tossed about so violently that it was absolutely necessary to make for the nearest port; and at 5 p. m. the flotilla anchored off Ciudadela, Minorca. The officers and men in the torpedo-boats were bruised and battered by the violent pitching and rolling of the boats and thoroughly exhausted from constant watch and anxiety in this short voyage.

The weather moderated and the sea went down during the night. The flotilla then proceeded to Algiers, where it arrived safely Thursday, April 21.

It was conceded that during this voyage the torpedo-boats would not have been able to fire a single torpedo.

The flotilla took in coal, water, and provisions, and left Algiers in the morning of April 28 for Bizerta, where it arrived in the afternoon of the 29th.

Admiral Brown inspected the harbor works, and after a delay of five hours, in which the torpedo-boats took in coal, water, and provisions, and repaired slight damages, they steamed around the east coast of Sardinia, en route to Toulon.

In order to pass through the Straits of Bonifacio during daylight the flotilla stopped at sea for several hours in the afternoon of April 30. The *Villars* took advantage of this halt to repair a slight damage to her machinery.

In the morning of May 1 the flotilla anchored in the Straits of Bonifacio, and after several hours' delay proceeded to Toulon, where it arrived at 6 a. m. May 2.

The *Annamite*, serving as torpedo depot-ship, or *Mère Gigogne*, was left behind to escort No. 69, which had to stop for repairs on April 30. The *Annamite* arrived in the evening of May 2, having been finally compelled to take No. 69 in tow.

Immediately after their arrival Nos. 27 and 28 were laid up, and four other boats had to go to the dock-yard for extensive repairs.

A squadron of armored ships, consisting of the *Colbert*, *Duperré*, *Courbet*, *Richelieu*, *Trident*, and *Suffren*, with the *Milan*, *Hirondelle*, *Condor*, and the deep-sea torpedo-boats *Balny* and *Deroulède*, left Toulon on April 27 for preliminary exercise in the Gulf of Juan.

They had quarterly target practice, fired torpedoes at movable targets, and made tests of the efficacy of the Bullivant torpedo-nets.

These experiments demonstrated that at speeds of less than 7 knots the nets did not impair the steering qualities of the ships; that they were easily and quickly placed in position, and afforded ample protection against the fish-torpedo when steaming at less than 5 knots; at greater speeds than 5 knots the nets raised and trailed.

It was also demonstrated that the blast from the discharge of the heavy guns did not injure the lifts supporting the booms and nets.

Torpedoes discharged by the *Balny* and *Deroulède*, steaming 17 knots, and at a distance of 400 metres, were invariably caught by the nets whenever they went straight and were correctly aimed. In one series of experiments at Hyères Isles it is stated that 20 torpedoes were fired and 16 failed to hit.

The above exercises were preliminary to the grand naval manœuvres the programme of which contemplated three series of operations.

First theme.—A squadron of armored vessels convoys a fleet of transports with troops from Toulon to Algiers and back, and will be attacked by a flotilla of torpedo-boats, having a base of operations on the island of Corsica.

Second theme.—A squadron of armored vessels will leave Toulon for Brest, and will be pursued by a hostile flotilla of torpedo-boats.

Third theme.—A hostile squadron of armored vessels will enter the Mediterranean and be exposed to the attacks of the flotilla of torpedo-boats.

The squadron orders directed that during the manœuvres the cruisers of the squadron and flotilla should steam at 13 knots only while acting as look-out vessels, but when acting as torpedo-boat chasers they should steam as fast as possible.

The speed of the armored squadron will not exceed 10 knots, which is the mean speed the squadron was supposed to be able to maintain for any length of time.

All the vessels will have full complements during the manœuvres except the four armored vessels acting as transports of troops.

In case of an attack by torpedo-boats the vessels acting as troop-ships will use the 14-centimetre guns, revolving cannon, and musketry.

In case a torpedo-boat attains a good position from which it may discharge a torpedo with effect it will blow one whistle, day or night, and if in the day-time hoist the national flag, if at night burn a Coston "preparatory."

The torpedo will be considered to have been discharged at the instant the whistle sounds.

While attacking, the torpedo-boats will keep torpedo tubes open and burn a charge of powder.

When a torpedo-boat has simulated the discharge of two torpedoes she must return to her base of operations for a new supply, and she will not participate in action again until she has obtained them.

A torpedo-boat will be considered out of action (1) if exposed to fifty shots from machine guns at less than 1,000 metres in night attacks; (2) if exposed to fifty shots of machine guns at less than 1,000 metres, or to one hundred shots at less than 2,000 metres in day attacks; (3) if exposed to the fire of a single gun, accurately aimed, at less than 500 metres, in either day or night attacks.

A torpedo-boat will be considered to have fired her torpedo when within effective range, independent of the state of the sea.

Operations of the torpedo-boat flotilla.—Admiral Brown left Toulon at 3 p. m. Wednesday, May 11, for Ajaccio, with the flotilla, consisting of, *Desaix* (flagship), *Villars*, *Seignelay*, *Dupetit Thouars*, *Annamite*, *Gabriel Charmes*, *Doudart de Lagrée*, and Nos. 26, 61, 62,63, 64, 65, 66, 68, 69, 70, 71, 72, 73, and 74.

The flotilla was formed in double echelon, with the cruisers and *Annamite* inclosed by the sixteen torpedo-boats.

It was clear, calm, and pleasant, and the flotilla arrived at Ajaccio at 9 a. m. Thursday, May 12. The torpedo-boats took in fresh supplies, and the flotilla remained at Ajaccio until Saturday, May 14.

The Admiral was advised of the departure of the convoy from Toulon, and at 6 a. m., May 14, sent the *Villars*, *Gabriel Charmes*, and *Doudart de Lagrée* to intercept it while en route to Algiers.

At 6 a. m. torpedo-boats Nos. 60 and 99 arrived from Toulon to join the flotilla. They had experienced rough weather and had been delayed thereby.

At 9 a. m. Admiral Brown left Ajaccio with the flotilla to meet the convoy, but the storm had raised an exceedingly rough sea, which threatened the destruction of the small torpedo-boats and compelled him to return to Ajaccio, at about 11 a. m.

The *Villars* and her consorts went about 50 miles beyond the Sanguinaire Islands without finding any evidence of the convoy.

The engines of the *Gabriel Charmes* broke down and the sea became so heavy that it was decided to return. The *Doudart de Lagrée* took the *Gabriel Charmes* in tow and they arrived at Ajaccio at 5 p. m.

The return to port was absolutely necessary. The seas swept the decks of the *Villars* and she rolled 23 degrees, while the *Doudart de Lagrée* had several bow plates crushed in and broken by the waves.

At 2 p. m. Monday, May 16, Admiral Brown left Ajaccio for the Balearic Islands. The flotilla formed in double column with the *Desaix* ahead, the *Villars* and *Seignelay* on each beam, and *Annamite* astern. The *Dupetit Thouars*, *Gabriel Charmes*, and *Doudart de Lagrée* remained at Ajaccio a few days longer.

The flotilla arrived at Port Mahon May 17, and prepared to attack the convoy on the return from Algiers to Toulon.

Sunday morning, May 22, the *Villars* with the *Doudart de Lagrée*, Nos. 99 and 100, the latter having joined during the previous week, left Port Mahon for the Algerine coast to reconnoitre and report movements of the convoy.

The flotilla was then divided into groups to guard the passage to Toulon. The *Desaix* and *Dupetit Thouars*, each with four torpedo-boats, cruised about 60 miles south of Cabrera Island; the *Seignelay*, with four torpedo-boats, cruised 60 miles south of Port Mahon; the *Gabriel Charmes* and No. 68 to the south east, and the *Annamite* with the other two boats near Cabrera, ready to furnish relief and supplies to the torpedo-boats when necessary.

The *Villars* and three torpedo-boats reached the vicinity of Algiers on Sunday evening. The *Villars* repainted her smoke-stack, sent down the yards on mainmast, and changed her rig to that of a barkentine, in order to avoid recognition. During Sunday night the captain of torpedo-boat No. 100 launched his Berthon collapsible boat and went into the harbor of Algiers to ascertain what preparations were being made for the departure of the convoy.

The convoy was observed to depart the next morning, and No. 100 was sent to report that fact to Admiral Brown. The *Villars* and the other boats followed the convoy about 9 miles astern. At 10 p. m. Monday night the *Doudart de Lagrée* was detached from pursuit off Djedjelli to report movements of the convoy to Admiral Brown.

The *Villars* and No. 99 continued to follow the convoy on Tuesday,

May 24, but during the night an Italian armored vessel, which had been cruising in the vicinity in the hope of witnessing an engagement, bore up and ran towards the *Villars*. The latter mistook the Italian for one of the convoy sent to drive her off; she thus lost sight of the convoy, and with No. 99 went to Toulon.

When Admiral Brown was informed of the departure of the convoy from Algiers by torpedo-boat No. 100 his flotilla was distributed as follows: The *Seignelay* and four torpedo-boats were 60 miles south of Port Mahon; the *Dupetit-Thouars*, and four torpedo-boats south of the passage between Majorca and Minorca; the *Desaix*, *Annamite*, and six torpedo-boats cruising east of Cabrera Island, and the *Gabriel Charmes* with torpedo-boat No. 68 acting as scouts to the eastward.

Tuesday morning the *Doudart de Lagrée* arrived and the Admiral decided that his best chance of meeting the convoy at night would be off Toulon, where the flotilla rendezvoused at 2 a. m., Wednesday, May 25, and occupied a sector 60 miles south of the port.

The flotilla waited until daylight, and not finding any trace of the convoy further attempts were abandoned, and the flotilla entered the port. The torpedo-boats had suffered severely and were not in condition to attack the convoy during daylight, though the weather had been pleasant during the last four days.

Operations of the convoy.—The squadron, commanded by Vice-Admiral Peyron, to convoy troop-ships, represented by four armored vessels with reduced complements, intended to leave Toulon on May 12, but there was some delay in fitting the Bullivant torpedo nets to the armored vessels. The convoy left Toulon at 7 a. m., May 14, and Vice-Admiral Peyron telegraphed the time of his departure to Admiral Brown at Ajaccio.

Admiral Peyron formed the vessels of his convoy squadron in double square with lookout vessels ahead and on each flank. The four armored ships, *Duperré*, *Colbert*, *Richelieu*, and *Courbet* occupied the four angles of a square of 800 metres; the four armored vessels representing troop-ships were in the form of a rectangle, as per sketch.

In this formation the scouts were all in advance; the rear of the convoy was left exposed upon the principle that a squadron under way would have nothing to fear from torpedo-boat attacks from the rear.

The Vice-Admiral was free to select the time of the departure of the convoy and his route to Algiers. He left Toulon during a gale in order to make the pursuit of the torpedo-boat flotilla as difficult as possible, since he was required to telegraph Admiral Brown the time of his departure.

The convoy steered direct for the coast of Africa between Sardinia and Minorca, passing about 60 miles east of Minorca, thence to Cape Djedjelli, then steamed along the coast at reduced speed and arrived at Algiers at 10 a. m., May 15. The speed of the convoy was only 9 knots, though authorized to steam at 10 knots.

Shortly after leaving Toulon the wind and sea increased in violence. The *Indomptable* pitched violently and shipped such quantities of water in her turret that she was sent back to Hyères Island until after the gale had subsided. She joined the convoy at Algiers three days later.

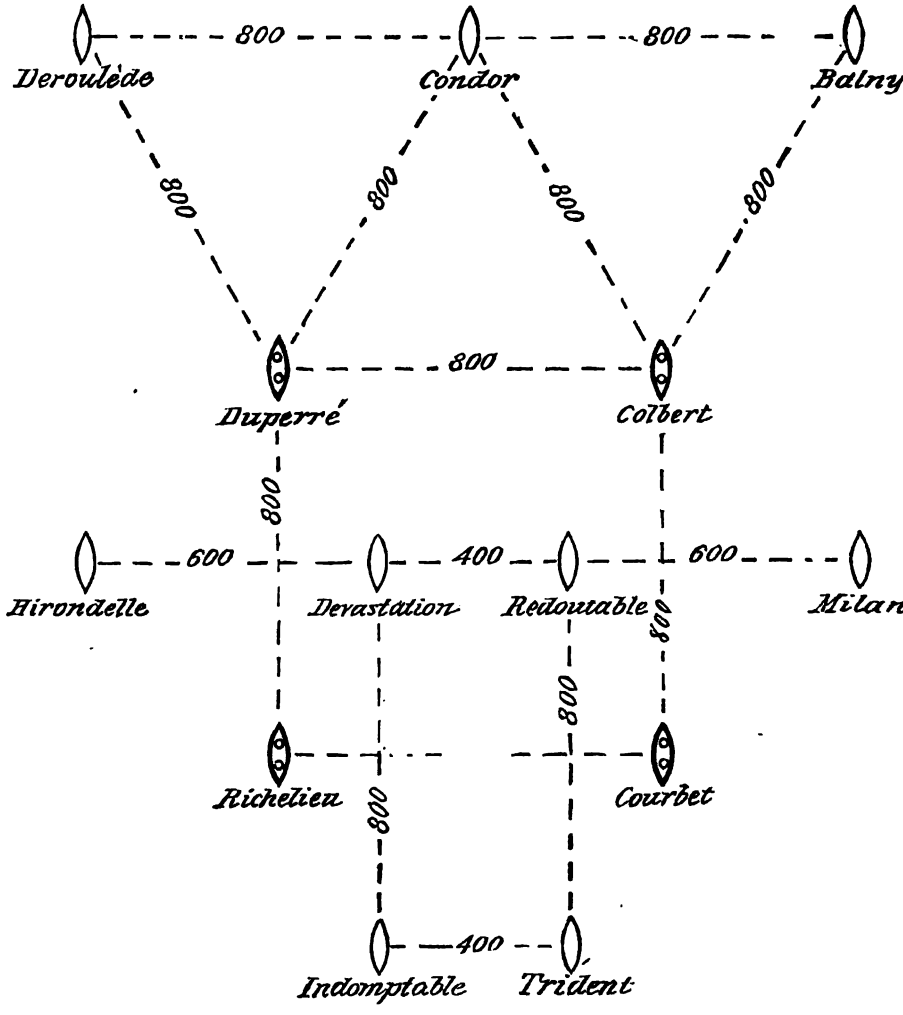

The sea-going torpedo-boats *Balny* and *Deroulède* proved to be better sea boats than the other lookout vessels, though during the gale they were obliged to leave their station on each flank in the van and steam close under the lee of the *Duperré* and *Colbert*. These changes necessarily broke up the formation of the convoy, but there is no information concerning the disposition of the vessels after the torpedo-boats and *Indomptable* had been obliged to leave their stations.

The convoy remained at Algiers one week, during which the supposed operation of landing the troops, etc., would have been effected.

At daylight, May 23, the convoy got under way to return to Toulon. The scouts were sent out ahead to reconnoitre and the convoy adopted the same formation as that in which the vessels left Toulon. The *Villars* was recognized notwithstanding her disguise, and the convoy expected an attack. The convoy steered east along the coast until off Philippeville at 4 a. m., May 24th, when the course was changed to the northwest, direct for Toulon.

During the night preparations were made to receive the expected attack, but only two torpedo-boats were sighted on May 24, and these made no effort to pursue the convoy. The sea was smooth and the weather clear and pleasant.

The convoy steamed at a speed of 9.8 knots, which speed was reduced during the night of May 24 and regulated to arrive in the vicinity of Toulon during daylight. The convoy finally anchored in Toulon Harbor at 11 a. m., May 25. The torpedo boat flotilla had arrived several hours before.

In the meantime there was a change in the French cabinet, a new Minister of Marine relieved Admiral Aube, who had planned the manœuvres. The second and third parts of the programme were abandoned.

MANŒUVRES OF THE SQUADRON OF EVOLUTIONS.

After the failure of the torpedo-boat flotilla, the squadron of evolutions was reorganized to consist of six armored vessels and six torpedo-boats, together with the torpedo vessels and cruisers.

A torpedo-boat was attached to each armored vessel, which furnished her supplies of water, coal, and provisions, instead of having one torpedo-depot ship for a flotilla, as in the previous organization. The captain of the torpedo-boat was under the command of the captain of the armored vessel, and an officer served as umpire on each ship. Three independent reports were made by these three officers on each operation, and the commander-in-chief made final decision as to the results.

The squadron consisted of the armored vessels *Duperré*, *Colbert*, *Courbet*, *Devastation*, *Redoubtable*, and *Indomptable;* the cruisers *Milan*, *Condor*, *Hirondelle*, and *Couleuvrine*, with torpedo-boats *Balny*, *Doudart de Lagrée*, *Deroulède*, Nos. 26, 99, and 100.

Vice-Admiral Peyron commanded this squadron, which sailed from Toulon on June 15, and anchored in the Gulf of Juan the next day. The torpedo-boats were exercised in discharging their torpedoes, and at 300 metres most of the torpedoes hit a target presenting a surface equal to that of a ship's side.

The torpedo-boats were required to make speed trials with natural draft, and in these trials the maximum speed of the boats was 16 knots,

instead of the 19 and 20 knots made when delivered. In these trials the torpedo-boats carried loaded torpedoes inserted in the tubes.

During the night of June 16 Admiral Peyron conducted a series of manœuvres, in accordance with a programme he had previously announced. The *Courbet* was ordered to manœuvre within a rectangular space 5 miles by 12 miles, off the Gulf, and to avoid the attacks by two torpedo-boats. The space prescribed was such that the evolutions were made within the circle of visibility of the light at Villefranche.

The *Courbet* was free to manœuvre at will within the prescribed rectangle, and was allowed either to mask or to show her running lights. Her speed was limited to 8 knots. She left the anchorage in the Gulf of Juan at 9 p. m., June 16, and was lost to view when she masked her running lights.

The torpedo-boats *Balny* and *Doudart de Lagrée* followed at 10 p. m., and cruised in the offing until midnight without finding the *Courbet*. At midnight the *Courbet* showed her running lights, and at 12.30 a. m. the torpedo-boats arrived within torpedo range, the *Balny* at 350 metres, and the *Doudart de Lagrée* at 200 metres. Both discharged their torpedoes and the latter made a good shot. The torpedo fired by the *Balny* passed 60 metres from the *Courbet*.

A second attack was made at 1.40 a. m., and this time the *Courbet* masked her running lights. The torpedo-boats were exposed to a heavy fire of Hotchkiss guns and great guns. They could not distinguish the course steered by the *Courbet* and did not discharge their torpedoes. This attack was judged to have failed. The rules governing torpedo discharges were the same as those enunciated for the original programme.

The squadron left the anchorage in the Gulf of Juan June 21, and proceeded to Rousse Island and Ajaccio. On the way to Ajaccio the *Condor* was detached from the squadron and pursued by five torpedo-boats in two divisions. The first division was formed by the *Doudart de Lagrée* No. 26 and No. 100; the second by the *Balny* and *Deroulède*.

The *Condor* was handled skillfully. The first division attacked from each beam and ahead at 2,000 metres; all three boats approached simultaneously. The *Condor* poured in such a fire of projectiles from machine guns and her battery that the torpedo-boat attack failed completely. The second division re-enforced the attack, but none of the boats could fire their torpedoes within range. This attack was made in daylight. The speed of the *Condor* was 17.5 knots, without forced draft.

After arrival at Ajaccio the torpedo-boats were exercised in manœuvring at a speed of 13 knots, during which they fired 8 shots at a fixed target. Two of the torpedoes hit, three were tolerable shots, and three missed. The range varied between 300 and 400 metres.

The squadron left Ajaccio on June 30 for Tunis, and exercised in tactics en route. The torpedo-boats attacked the squadron during this voyage, and only one attack out of twenty was judged to have been successful.

In the Bay of Goletta six torpedo-boats blockaded the vessels of the squadron. The *Duperré*, with the *Condor*, *Couleuvrine*, and *Milan* left the bay at 6 p. m. to conduct an experiment to ascertain if the torpedo-boats, which had been in sight during daylight, could be driven off by the torpedo-vessels and compelled to lose touch during the night. The torpedo-vessels were supposed to be exempt from an attack by the torpedo-boats. The captain of the *Duperré* was in charge of the experiment, and he was free to manœuvre his vessel within prescribed limits and at a speed not to exceed 8 knots.

The six torpedo-boats were seen by the *Duperré* as soon as she left the bay, and the three torpedo-vessels chased the torpedo-boats so that the *Duperré* might escape at night. It became dark before the torpedo-boats could be driven out of sight of the *Duperré*, and the three torpedo-vessels were assembled around the *Duperré* for protection. The electric light used by the *Duperré* served to reveal her position clearly, and the torpedo-boats attacked from all sides. From 9 p. m. to midnight there were eighteen attacks, and only one was deemed to have been successful.

The next day, in accordance with a rule adopted by Vice-Admiral Peyron, the torpedo-boats were exercised in actually discharging their torpedoes. In the attacks the night before a torpedo discharge was merely simulated. In these experiments 9 out of 12 torpedoes launched are reported to have worked well.

The squadron was at Bona on the 16th of July, and anchored at Algiers at 9 a. m. July 18.

On the 19th of July, the *Hirondelle* laid out a submarine mine field in Mustapha roads to protect the squadron from attack by an enemy expected from to seaward. On the 20th July the French naval brigade was landed from the vessels of the squadron and attacked the hippodrome of Mustapha, Algiers. The electric search-lights were put in operation at night.

The squadron remained in the vicinity of Algiers until July 28, and it was necessary to overhaul the boilers and engines of the torpedo-boats, which had been in constant use since departure from Toulon. The cruiser *Sfax* joined the squadron at Algiers.

The squadron arrived at Oran July 30, and sailed thence on August 4 to rendezvous at Toulon by August 10.

The *Sfax* and the six torpedo-boats were ordered to dispute the squadron's passage by the Balearic Islands. The *Sfax* and the six torpedo-boats anchored off Formentera on August 4. They knew that the squadron of armored vessels, without scouts, would pass in mid-channel between Ivica and Majorca at 9 p. m., with their running lights visible and steaming at speed of 10.5 knots.

At 9.30 p. m. torpedo-boat No. 100 made the first attack on the *In-*

domptable. The *Colbert* was attacked in succession at 10 p. m. by the *Balny, Doudart de Lagrée* and No. 99. All the armored vessels were repeatedly attacked by the torpedo-boats from 10 p. m. until 1 a. m., and it was conceded that they would have suffered seriously if the torpedoes had been aimed well and had worked satisfactorily. The weather was splendid and sea smooth, so that all the conditions were favorable for torpedo attacks.

The squadron arrived at Toulon on the 10th of August, and it was found to be necessary to put four of the six torpedo-boats under extensive repairs.

The experiments of the squadron of evolutions were conducted in fine weather, which was favorable to torpedo-boats.

The casualties include the following:

(1) The total loss of torpedo-boat No. 67, sunk in collision off Port Martinho, Portugal, en route from Brest to Toulon to take part in the manœuvres.

(2) Torpedo-boats Nos. 27 and 28 were disabled in the preliminary trip to Algiers and back, and could not participate in the manœuvres.

(3) During the manœuvres the machinery of torpedo-boat No. 68 was disabled to such an extent as to require two months to repair it.

(4) The *Doudart de Lagrée* had three plates bulged in by the seas off Ajaccio, but was repaired and continued to take part in subsequent operations with the evolutionary squadron.

(5) The *Gabriel Charmes* had her machinery disabled and several plates broken and bulged in by the seas. She proved to be a failure as a torpedo-boat and also as a gun-boat.

(6) All the torpedo-boats are reported to have been in need of a thorough overhauling after the first series of manœuvres; and four out of the six torpedo-boats which participated in the manœuvres of the evolutionary squadron were in need of extensive repairs after the return from Algiers.

(7) The machinery of the *Villars* was damaged during the first series of manœuvres.

(8) The tiller of torpedo-boat No. 99 was damaged during exercise of the evolutionary squadron off Algiers.

CONCLUSIONS.

(1) The unseaworthiness of the 118-foot torpedo-boats was demonstrated by their inability to keep the sea in stormy weather during the preliminary cruise of the flotilla, by the fact that all the boats were obliged to take refuge in the nearest port at Ciudadela on April 21, and by the compulsory return to Ajaccio after the sortie on the 15th of May.

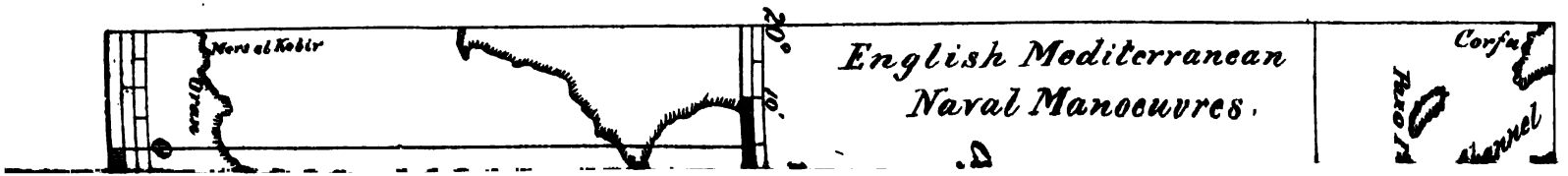
English Mediterranean
Naval Manoeuvres.
Mers el Kebir
Oran
20°
10'
Corfu
Paxo
Channel

(2) The demand for coal made by Nos. 27 and 28 on April 20, after having been at sea only nineteen hours, indicates that the coal endurance of these boats is inadequate for service at sea.

(3) The difficulty experienced by the *Annamite* in coaling No. 28, and the fact that she could only furnish coal at the rate of 2 tons in one hour, demonstrates that a torpedo depot-ship can not give a flotilla of torpedo-boats necessary supplies in stormy weather at sea.

(4) The behavior of the torpedo-boats during the storms encountered by the flotilla caused so much physical discomfort and mental anxiety that it was evident that no warfare could be undertaken in such weather.

(5) The organization adopted by the evolutionary squadron, in which each armored vessel acted as depot-ship for one torpedo-boat appears to have been much more efficient than that of the flotilla, wherein a single torpedo depot-ship served for a large number of torpedo-boats.

(6) The tactical formation of the convoy ordered by Vice-Admiral Peyron was evidently adopted upon the principle that torpedo-boat attacks could only be successful when they approached at great speed, and that if chased the rate of approach would be so slow that the torpedo-boat would be necessarily long exposed to gun fire. The scouts and torpedo vessels were therefore well forward in the tactical formation of the convoy, and the rear of the convoy was left without protection.

(7) The larger sea-going torpedo-boats were much more efficient than the others, but in the voyage of the convoy the *Balny* and *Deroulède* could not keep their stations and were obliged to steam under the lee of the armored vessels. The *Doudart de Lagrée* had some of her bow plates crushed in by the sea when steaming against the wind and sea. The manœuvres, therefore, did not establish that this type of torpedo-boats is efficient for service at sea.

(8) The manœuvres of the evolutionary squadron indicate that a very small percentage of the torpedo-boat attacks were successful. In the different attempts to get within range there were six night attacks on the *Courbet* and two got within torpedo range; five attacks on the *Condor* in daylight, all failed; eighteen night attacks by six boats on the *Duperré*, one succeeded; twenty night attacks on the squadron near Ajaccio, one was successful; or four out of forty-nine attacks succeeded—about 8 per cent. In the other experiments to ascertain the accuracy of torpedo discharges, one out of two attacks on the *Courbet* succeeded, two out of eight torpedoes hit a target equivalent to the side of a ship, and there is another statement that nine out of twelve torpedoes worked well. The percentage of hits when within range was therefore less than 50 per cent. In these, all the conditions of weather, sea, skill in handling the boats, and in aiming the torpedoes were favorable to torpedo-boat attacks, and the torpedoes were also supposed to be in perfect order.

(9) The manœuvres indicate that there is no hope for a successful torpedo-boat attack upon a squadron during daylight.

(10) The behavior of the armored vessels during the manœuvres under all conditions indicate a high degree of efficiency.

(11) The *Gabriel Charmes* proved to be a complete failure. She has been altered from her original design to be a regular torpedo-boat, and no more of her type will be built.

ITALIAN.

The Italian manœuvres began about the 10th of June, and were conducted under conditions closely resembling actual war. They covered a period of over forty days. The men in the attacking division did not have their hammocks for thirty-four days; one watch was at the guns while the other slept on deck. Steam was up constantly. The officers' messes lived on ship's provisions. All endured a good deal of hardship, especially the officers and men in the torpedo-boats, who were not relieved during the manœuvres.

No complete description of the manœuvres has been published. The fleet was divided into two squadrons during the first part of the manœuvres, up to July 21. One of these acted as the defending squadron under Vice-Admiral Orengo, and consisted of the *Dandolo*, *Affondatore*, *Palestro*, *Castelfidardo*, *Dogali*, *Staffetta*, *Barbarigo*, *Folgore*, and twenty first-class 100-foot torpedo-boats. The attacking squadron, under the command of Rear-Admiral Racchia, included the *San Martino*, *Duilio*, *Ancona*, *Colonna*, *Bausan*, *America*, *Tripoli*, *Volta*, two 140-foot Yarrow boats, four Schichau 128-foot torpedo-boats, and three first-class 100-foot torpedo-boats.

Vessels taking part in the Italian naval manœuvres, 1887.

Name.	Type.	Year when completed.	Displacement in tons.	Indicated horse-power.	Trial speed, maximum, knots.	Remarks.
Dandolo	Armored turret	1882	11,202	8,150	15.5	
Duilio	do	1880	11,138	7,710	15	
Palestro	Armored broadside	1876	6,274	3,361	12.9	
Ancona	do	1866	4,460	2,471	13	
Castelfidardo	do	1866	4,250	2,125	12	
San Martino	do	1864	4,234	2,620	11.5	
Affondatore	Armored turret	1883	4,002	3,240	13	
Bausan (Giovanni)	Protected cruiser	1885	3,068	5,500	17.5	
Savoia	Cruiser	1885	2,850	5,000	15	Royal yacht.
Dogali	Protected cruiser	1887	2,200	8,100	19	
Staffetta	Cruiser	1877	1,388	1,991	15.5	
America	Torpedo depot ship	1887	9,550	8,500	18.5	Purchased 1887.
Tripoli	Torpedo vessel	1887	741	4,200	22	
Colonna (Marc Antonio)	Gun dispatch vessel	1879	656	1,700	15.9	
Barbarigo (Agostino)	do	1879	624	1,690	15.9	

Vessels taking part in the Italian naval manœuvres, 1887—Continued.

Name.	Type.	Year when completed.	Displacement in tons.	Indicated horse-power.	Trial speed, maximum, knots.	Remarks.
Folgore	Torpedo vessel	1887	317	2,800	22	
Volta	First-class transport	1885	2,842	2,500	.....	
Torpedo-boat No. 24	Thornycroft, 100 feet.	1881	34.5	620	22.4	
No. 25	Yarrow, 100 feet	1882	40	620	22	
No. 26	....do	1882	34	500	18.2	
No. 29	....do	1882	34	430	18.2	
No. 31	....do	1882	34	430	18.2	
No. 39	Thornycroft, 100 feet, Genoa.	1883	34	500	20.5	Built in Italy.
No. 40	....do	1884	34	500	20.5	Do.
No. 41	Thornycroft, 100 feet, Leghorn.	1884	34	500	20.5	Do.
No. 43	Thornycroft, 100 feet, Naples.	1885	34	500	20.5	Do.
No. 44	....do	1885	34	500	20.5	Do.
No. 45	....do	1885	34	500	20.5	Do.
No. 46	Thornycroft, 100 feet, Genoa.	1885	34	500	20.5	Do.
No. 47	....do	1885	34	500	20.5	Do.
No. 48	Thornycroft, 100 feet, Naples.	1886	34	500	20.5	Do.
No. 49	Thornycroft, 100 feet, Venice.	1886	34	500	20.5	Do.
No. 50	Thornycroft, 100 feet, Genoa.	1886	34	500	20.5	Do.
No. 54	Thornycroft, 100 feet, Naples.	1886	34	500	20.5	Do.
No. 55	....do	1886	34	500	20.5	Do.
Five not given	Thornycroft, 100 feet (Italian).	.....	.....	500	20.5	Do.
Torpedo-boat No. 76	Yarrow, 140 feet	1887	110	1,600	25	
No. 77	....do	1887	110	1,600	25	
No. 57	Schichau, 128 feet	1886	67	1,000	22	
No. 58	....do	1886	67	1,000	22	
No. 59	....do	1886	67	1,000	22	
No. 99	....do	1887	90	1,000	22	

A great many problems of war were carefully studied, and one in particular; the attack and defense of the Straits of Messina. The attacking squadron was ordered to force a passage through the Straits of Messina, opposed by the defending squadron. The latter anchored off Messina light-house on June 28. The attacking squadron went to sea, but appeared in the offing on July 2, when the defending division was thoroughly prepared for action and the "enemy" withdrew.

The defending division anchored in the harbor of Messina on the 9th, and Vice-Admiral Orengo received a telegram that the attacking squadron was off Sicily. This telegram was a mistake, and the squadron reported was afterwards ascertained to have been the English Mediterranean squadron. This information gave Vice-Admiral Orengo a false sense of security.

At 4 a. m. the next morning the *Barbarigo*, acting as a scout outside, sighted the attacking squadron approaching the port. The *Barbarigo* retired to report to the defending squadron, and was hotly pursued by the *Tripoli*, the torpedo-boats, and the whole squadron. The defending squadron was surprised without their torpedo-nets in place. The *Palestro* and *Dandolo* went to the assistance of the *Barbarigo*, and the *Dandolo* fired a shot from her 100-ton gun against the *Tripoli*.

The action between the two squadrons became general and lasted over an hour and a half. The attacking squadron was adjudged to have been victorious and the entire defending squadron put out of action.

The attacking squadron was accompanied by a transport with 4,000 tons of coal. The *Duilio* and *San Martino* coaled at sea at the same time, one on each side of the collier; a gale sprang up while thus engaged, and they were compelled to finish coaling under the lee of an island. Yard-arm whips with bags containing a ton of coal were used. The torpedo-boats were coaled by yard-arm whips from the other vessels of the squadron. It was found that it would have been more advantageous to have had the same amount of coal in a number of colliers rather than in one vessel. Admiral Racchia stated that he should have had at least four colliers.

Considerable difficulty was experienced in supplying the *Bausan*, *Dogali*, *Tripoli*, and torpedo-boats with fresh-water required for their high-pressure boilers.

Search-lights were found to have many disadvantages. They betrayed the position of ships which used them, and when used by the vessels in squadron the beams fell on other ships at times, dazzling the men to such an extent that they could see nothing. These crossing beams of electric light rendered it impossible to point the guns properly.

The smoke of the rapid-fire guns was found to impede aim and to mask the movements of the attacking boats. The *Tripoli* is said to have put twelve torpedo-boats out of action on the coast of Sicily by her rapid-fire guns. She proved to be a most desirable type of vessel.

The steel wire torpedo-nets were found to give perfect protection against the Whitehead torpedo.

The King of Italy, on board the *Savoia*, reviewed the fleet at Leghorn on July 21, after which the second part of the manœuvres was commenced and continued until July 30.

The entire fleet was then united under the command of Vice-Admiral Orengo. The *Volta* and fifteen torpedo-boats were left at Leghorn to co-operate with the Army in the defense of the coast, but were subsequently surprised and blockaded by the *America*, *Tripoli*, *Folgore*, and four large torpedo-boats. This blockade with its incidental operations continued until the manœuvres ceased.

The other vessels of the fleet left Leghorn at daylight on July 24, to operate as a hostile squadron on the coast with special object of land-

ing a force between Spezia and Piombino and cutting the railroad and telegraphic communications. During the blockade at Leghorn there were several unsuccessful attacks by the small torpedo-boats upon the blockading vessels. The latter repeatedly attacked the *Volta*, which kept her torpedo-nets down and one-half of her crew at quarters day and night. Sentries and light field guns were posted on the ends of the mole and torpedo-boats patrolled the entrances.

The squadron made several attacks on different parts of the coast, and finally, on July 30, succeeded in landing a force at San Vincenjo. This force of 1,000 men was landed from the vessels in the space of forty-five minutes. The communications were cut and held for several hours against all the military forces that could be sent to oppose them.

COMBINED U. S. NAVAL AND MILITARY MANŒUVRES, NOVEMBER, 1887.

A series of combined naval and military manœuvres were conducted by the U. S. North Atlantic Squadron and the Army garrison of Fort Adams, at Newport, R. I., November 10, 1887.

Elaborate reports, with maps covering all details, were submitted by Rear-Admiral S. B. Luce, from which the following has been compiled:

The plan of operations included two distinct manœuvres: (1) A passage by the fleet through a mine field protected by the guns of Fort Adams, and (2) a landing at Coddington Point, an attempted advance, a repulse, and embarkation covered by the guns of the fleet.

The following general order was issued by Rear-Admiral S. B. Luce, commander-in-chief of the U. S. naval force North Atlantic Station, to govern the manœuvres.

MEMORANDUM OF NAVAL ATTACK UPON NEWPORT.

On the day to be designated the North Atlantic Squadron will be anchored off Brenton's Reef light-ship, and supposed to represent a blockading squadron about to attack Newport.

The western channel into Narragansett Bay and Sakonnet River are inaccessible, and it is deemed impracticable to land on the south side of Rhode Island. The main entrance into the harbor is obstructed with a mine field protected by the guns of the fort. A narrow opening, made by countermining, exists in the obstructions, and it has been determined to take advantage of this channel, run by the batteries, and attack the city of Newport from the rear.

An early breakfast having been served (6 a. m.), and ships cleared for action, the squadron will get under way at 8 a. m.

Signal being made to "Run by the enemies batteries," the flag-ship will lead the vessels in natural order of steaming. The course will be northeast by east until the north end of fort wharf comes on range with the flag-staff of torpedo station, when head for the flag-staff.

It is known that this line of bearing (N. E. by E. ¼ E.) leads through the obstructions and will be closely held while passing them. Mines are laid from Bull's Point in a southeast direction. Before reaching their vicinity vessels will keep a little

on the starboard quarter of the next ahead, and after passing the fort will take the same relative bearing on the port-quarter to allow free range to the bow and stern guns. Should smoke interfere with seeing the range, the estimated distance from the shore must be the guide, and vessels steered for the passage with the chance of slipping between the mines, if it is missed.

After passing the obstructions the course will be north, passing to the westward of Rhode Island, and thence on, following the movements of the flag-ship to the anchorage.

The squadron will necessarily pass very close to the fort, and a rapid fire of the machine guns will be relied upon to drive the defenders from their guns or to disconcert their aim.

Torpedo-launches will take stations on the west side of the vessels, well in advance. They will be armed with guns and torpedoes (using fuses only) and be ready to neutralize or destroy those of the enemy.

Having run by the fort the vessels will proceed to the anchorage indicated off Coddington Point and prepare to land the troops.

The *Galena* will take station near the *New Hampshire* and prepare to land a battalion of four companies of sailors. These, with all the marines of the squadron, will be landed, with their dinners in their haversacks, by 11 o'clock if possible.

The marine battalion, under Lieut. B. R. Russell, and sailors, under Lieut. A. B. Speyers, will report to Capt. F. G. Smith, U. S. Army, commanding the army contingent and brigade for the defense.

Dinners will be prepared by 11 o'clock, the landing to take place as soon after 12 m. as possible.

When the landing commences, a covering fire will be kept up as rapidly as can be maintained by the men on board (allowing time for fully serving the guns with projectiles).

The landing will take place on the north side of the point, and as it is not presumed that the defense will give up the control of the city of Newport without a severe struggle, the boats must be kept ready for a rapid, but it is to be hoped an orderly, retreat at all times.

The attacking force being in retreat, the ships should only fire when the projectiles (imaginary) would injure the army forces without harming our own people.

Reduced charges will be used in the great guns if practicable.

Attacking party.—One battalion (4 companies): *Richmond*, 3 companies, 34 men each; *Dolphin*, 1 company, 34 men, 2 apothecaries, 4 stretchermen, 4 signalmen, 2 buglers, 8 pioneers; total 156. One battalion (4 companies): *Atlanta*, 2 companies, 34 men each; *Ossipee*, 2 companies, 34 men each, 2 apothecaries, 4 stretchermen, 4 signalmen, 2 buglers, 8 pioneers; total 156. One battery of artillery (4 pieces): *Richmond*, one 3-inch rifle, 21 men; *Ossipee*, one 3-inch rifle, 21 men; *Atlanta*, two Gatling guns, 42 men; total 84. Grand total, 396.

Defense.—One battalion (army): Four companies, 17 men each, total 68. One battalion (blue jackets): *Galena*, 4 companies, 25 men each, 1 apothecary, 2 stretchermen, 5 pioneers, 1 bugler, 2 signalmen; total, 111. One battalion (marines): Four companies, 30 men each, 8 music; total, 128. One battalion of artillery, 4 pieces, 16 men each; total 64. One company apprentices, 25 (independent). Grand total, 396.

S. B. LUCE,

Rear-Admiral, Commanding U. S. Naval Force, N. A. Station.

A board of umpires was appointed, governed by the following rules:

(1) Umpires are to consider themselves as such not only for their own posts, but for the whole field of operations as well.

(2) Each ship and boat will, if possible, carry a sub-umpire, who shall have authority over his own ship and boat, or any other in which there is no umpire.

(3) Any ship passing within the radius of destructive effect of a torpedo will be considered as *hors de combat*.

(4) Any torpedo-boat that shall arrive within 10 yards of a ship shall be considered as having torpedoed her.

(5) A torpedo or other boat being under fire from two rounds of a heavy gun, for two minutes from a machine gun, or for one minute from two boat guns will be considered out of action.

(6) Ships or boats ruled out of action will indicate the same by hoisting a white flag, and continue in the formation without again taking part in the action.

(7) A signal number hoisted on the shore near the fort will indicate that the vessel bearing the number shown is ruled out by being in contact with a mine.

(8) The forts shall be considered as passed when by the line joining the Goat Island and Rose Island lights.

(9) Angles for position by the three-point problem, with the time of observations, will be recorded as rapidly as possible on board the ships while passing the fort; also the angle of elevation and time each gun is fired on either side, for a study of the results. No gun will be fired more frequently than is consistent with the ordinary service of the gun in actual battle. Torpedo-station time will be used.

(10) The vessels must pass between two buoys bearing blue flags planted in the channel. Any vessel passing outside of these buoys will be ruled as having struck a mine and be *hors de combat.*

The attacking squadron included the following vessels:

Name.	Type.	Year when completed.	Displacement.	I. H. P.	Maximum speed.	Main battery.
Richmond	Cruiser ...	1858	2,700	602	9.5	12 IX-in. S. B.; VIII-in. M. L. R.; 1 60-pounder, B. L. R.
Ossipee	....do	1861	1,900	715	10.5	6 IX-in. S. B.; 1 VIII-in. M. L. R.; 1 60-pounder, B. L. R.
Dolphin	....do	1885	1,485	2,240	15.5	1 VI-in. B. L. R.
Galena	....do	1878	1,900	776	9.5	6 IX-in. S. B.; 1 VIII M. L. R.; 1 60-pounder, B. L. R.
Atlanta	Partially protected cruiser.	1886	3,189	3,500	16.3	2 VIII-in. B. L. R.; 6 VI-in. B. L. R.

These vessels also carried secondary batteries of Hotchkiss revolving cannon, Gatling guns, 6 pounder, 3-pounder, and 1-pounder rapid-fire guns, 3-inch B. L. R., and howitzers.

The steam-barge and the steam-launch of the *Richmond* and the steam-launches of the *Ossipee* and *Dolphin* were armed with spar torpedoes and steamed abreast of their respective ships to the westward.

The defense consisted of Fort Adams, a line of submarine mines, and two steam-launches, armed with spar torpedoes, from the *Galena* and *Atlanta.*

The armament of Fort Adams consisted of two 15-inch smooth-bore guns mounted en barbette outside the southwest angle of the fort, and ten 10-inch smooth-bore guns in the second tier of casemates on the west side, covering the entrance. Besides these there were mounted in the fort two 10-inch mortars, one 30-pounder Parrot, and one 4½-inch smooth-bore gun. Nine guns only were in action.

The line of mines ran from Fort Adams in a northwest-by-north direction towards the Dumplings. The mines were empty buoyant mines, six in number, fitted with the McEvoy circuit-closer. They were anchored 10 feet below the surface at mean low water by mushroom and improvised anchors in from 32 feet to 17 fathoms of water. These mines, 60 feet apart, were laid on each side of a central space 120 feet wide. This space was supposed to have been made by countermining by the squadron previous to the attack. The undefended space was on the line of bearing indicated in the general order.

The circuit closer in each mine was connected by a length of single-armored cable with a junction-box, and the core of each single cable was here spliced each to its own core of a multiple cable, leading from the firing battery ashore in the casemate of the northwest bastion of the port to the junction-box. At the firing station igniters were interposed in each circuit, so that the explosion of an igniter would indicate the explosion of that submarine mine. These mines were laid and arranged by the officers and men of the squadron. The extremities of the line defended by mines were marked by two flags, a red flag to starboard and blue flag to port looking to seaward.

THE PASSAGE OF FORT ADAMS.

The operations were executed substantially as indicated in the preliminary general order.

At 8.40 a. m. November 10, 1887, the squadron was steaming in to Newport Harbor in column of vessels in natural order, *Richmond*, *Ossipee*, *Dolphin*, *Galena*, and *Atlanta*, when the signal was made "Run by the enemy's batteries." The ships had been cleared for action, and at this signal went to quarters and closed to half distance, steaming for the entrance. The *Richmond* opened fire at $9^h\ 12^m\ 5^s$, at 2,500 yards, with the 60-pounder B. L. R., followed by the 8-inch M. L. R. and the six 9-inch guns as they came to bear. The fort commenced firing the two 15-inch guns at 2,000 yards at $9^h\ 13^m\ 26^s$. These two guns had been sighted at ten points distant from each other, on an average 250 yards. The distances of these points from the guns were computed, and each gun was then trained upon each one of these points and the deviations marked on the traverse circles. As soon as the stem of the approaching vessel came on line the piece was fired. One gun was able to get two shots at each position; the other, one. In this way the chief sources of error in heavy-gun fire were eliminated.

The two torpedo-boats of the defense steamed out to attack the squadron as the leading vessel reached Castle Hill. These boats were quickly declared out of action, because of the heavy fire to which they were exposed. The two leading torpedo-boats of the attacking squadron did not have time to attack the defending torpedo-boats before the latter were declared out of action.

Up to $9^h.20^m$ the 15-inch guns fired four shots at the *Richmond* and one at the *Ossipee*. The former was estimated to have been hit twice, the latter not at all. Up to this time the fire of the ships was directed at the defending torpedo-boats.

From 9^h 20^m to 9^h 30^m the *Richmond* was fired at five times and hit four; the *Ossipee* three times, hit twice; *Dolphin* once, not hit.

In return the *Richmond* fired ten shots, the *Ossipee* two, and *Galena* one.

At 9^h 28^m the fire of the fleet was re-enforced by the machine and rapid-fire guns of the *Dolphin* within 1,200 yards, and the 15-inch guns were considered silenced.

When the ships came within range of the 10-inch casemate guns the *Richmond* was fired upon, at point-blank range, nine times, and hit seven. The *Ossipee* was fired at seven times; the *Dolphin*, eight; *Galena*, seven, and *Atlanta* four.

The *Richmond*, having been fired at nine times by the 15-inch guns under peculiar advantages, and seven times by the casemate guns at point blank, was adjudged disabled.

The *Ossipee* and *Galena*, soon after getting into range of the casemate guns, struck torpedoes, and were ruled out.

The *Dolphin* got by considerably injured, and the *Atlanta*, having escaped all fire from the 15-inch, and not coming within the range of the casemate guns until their fire was much reduced, suffered little.

On the side of the defense, it was estimated that the casemate guns had been fired at seventy-two times, and that all shots from the 8-inch guns were effective either from penetration or splintering, and that those of the 6-inch rifles and 9-inch smooth-bores were effective against the masonry between the piers. The machine and rapid-fire guns inflicted great loss, but could not absolutely silence the casemate guns, and, as the curtain was pierced for twenty-two guns and only mounted eleven, only about one-third of the shots fired might be assumed to have been destructive, because of the difficulty of telling in the smoke which casemates were manned and which vacant. The final result was, that of the nine guns in action six were considered as silenced, three by the fire of the four leading ships and three by the *Atlanta*, and possibly one dismounted.

Besides the usual preparations in clearing ship for action, a Gatling gun was mounted in the main-top, a 3-inch rifle on the forecastle, and a rifle howitzer on the poop of each ship. Marines and sharpshooters were stationed in the tops and behind barricades of hammocks on the forecastle and poop, to fire on the defending torpedo-boats and the gunners of the fort.

The *Richmond* fired fifteen rounds from the 60-pounder rifle, seven rounds from the 8 inch M. L. R., sixteen rounds from the 9-inch smooth-bores, twenty-seven rounds from the 20-pounder howitzer, and five hun-

dred and twenty rounds from the small-arms. She commenced firing at $9^h\ 12^m\ 5^s$, and ceased at $9^h\ 32^m$.

The *Ossipee* fired two 8 inch M. L. R., one 60-pounder, four 9 inch, and three 3-inch rounds at the torpedo-boats, and three 8-inch, two 60-pounder, eight 9-inch smooth bore, two hundred and sixty-three rounds from the Gatling in the top, one hundred and twenty by sharpshooters in the tops, and seventy by sharpshooters on deck, at the fort. She commenced at $9^h\ 18^m\ 30^s$, and ceased firing at $9^h\ 35^m\ 20^s$.

The *Dolphin* fired two rounds from the 6-pounder R. F. guns at the torpedo-boats, and forty-five from the 6-pounder R. F. guns, twenty-four rounds of the 57^{mm} Hotchkiss guns, and eight hundred rounds from the Gatling, at the fort. Six 6-inch rounds were fired at the case mates. She commenced firing at $9^h\ 29^m\ 38^s$, and ceased at $9^h\ 34^m\ 46^s$.

The *Galena* fired six 60-pounder, two 8-inch rifle, five 9 inch, three howitzer, and five 3-inch rifle rounds. She commenced at 9.30, and ceased firing at $9^h\ 39^m\ 20^s$.

The *Atlanta* fired twenty-seven shots from the 6-inch B. L. rifles, and forty-seven rounds from 6-pounder R. F. guns. The 8-inch B. L. R., the two 3-pounder and the 1-pounder R. F. guns, and the 37^{mm} Hotchkiss were not fired for want of (reduced) exercise charges. She commenced firing at $9^h\ 33^m\ 30^s$, and ceased at $9^h\ 43^s$.

After the squadron passed the fort the *Galena* proceeded to the anchorage in Coaster's Harbor. The rest of the squadron passed on west of Rose Island to the anchorage in Coddington Cove preparatory to landing the naval brigade.

OPERATIONS AND LANDING OF THE NAVAL BRIGADE.

These consisted of a landing by the naval brigade under cover of the guns of the fleet, their repulse by the troops of the defense, and their re-embarkation. The programme indicated in the preliminary general order was essentially carried out.

In order to accomplish this successfully the successive positions of the respective forces at different periods of the contest were decided upon beforehand and plotted upon a series of maps, a copy of which was furnished to each brigade, battalion, and battery commander. Two masts were elevated upon prominent points in the field, from which the naval signal numbers were displayed in succession, with the understanding that as each number was displayed the movement should go on until the positions were reached indicated upon a map with the corresponding number; and that after the last position was reached the brigade was to re-embark as rapidly as possible, and that the defense was not to follow them beyond an indicated line. These positions were selected by Major Livermore, Corps of Engineers, U. S. Army, after consultations upon the ground with Lieutenant Dillingham, U. S. Navy, the adjutant-general of the attacking force, and Captains Smith and

Cushing, U. S. Army, commanders of the defense and of the light battery, Fourth Artillery.

The place selected for the landing was the beach at the end of Coddington Point. Coddington Point forms a peninsula, connected with the main-land by a neck narrowing sufficiently to entitle it to be called an isthmus.

All the outlets from this isthmus in the direction of the main-land were commanded by the railroad cut and embankment. This afforded such an admirable cover from the fire of the fleet as to make an advance practically impossible were this bank held in force. For that reason it was assumed that both the attack and defense had reasonable hope of being able to seize it.

On the other hand, all the approaches to the beach were absolutely swept by the fire of the fleet.

The defense occupied a line across the railroad cut, marked on the map A B. The centre of this position was occupied by the Bates house and grounds, which it was not deemed proper to invade, and which was considered to be an impenetrable forest. The *Galena's* men held the left between the "forest" and the beach, supported by machine-gun fire on Coaster's Island. The army was posted in the centre behind the forest along the railroad cut. The marines on the right with skirmishers deployed. The Light Battery was concealed behind a barn on the right.

The different positions occupied were signaled during the operations, and included the following changes of position by the defense:

Second position.—On the left *Galena's* bluejackets retired to the rear edges of the "forest," the centre and right same as in the first position.

Third position.—The Light Battery unlimbered and in action, the rest as in second position.

Fourth position.—General advance of the right and centre, while the machine guns opened fire from Coaster's Island on the flank of the attacking forces.

Fifth position.—Occupation of the entire field across the isthmus, while the attacking forces withdrew to the ships.

THE ATTACK.

The *Dolphin*, *Richmond*, *Ossipee*, and *Atlanta* anchored in Coddington Cove in the order mentioned. Immediately after the *Dolphin* anchored, her company and two 3-inch B. L. rifles were landed on the eastern side of the cove and occupied a position behind a stone wall and across the railroad, from which they enfiladed the railroad cut and embankment on the defender's right. This embankment was thereby kept clear of the defenders, who were unable to interfere with the landing on the beach at Coddington Point, as all the rest of the peninsula was covered by the guns of the fleet.

The rest of the attacking force landed on the beach at the north end of Coddington Point, under shelter of the cliffs.

The Gatling guns were placed in the ruins of an old fort on the Point, where they commanded the field.

The attacking force expected to encounter infantry only, and the appearance of the artillery and the force on Coaster's Island had the nature of a surprise.

The right flank advanced while the enemy's left, the *Galena's* blue jackets, retired in order to draw the attacking force under fire of Coaster's Island. The *Dolphin's* company and 3-inch rifles, behind the stone wall, continued to operate against the marines skirmishing on the enemy's right.

The attack took the prescribed positions as signaled successively. The fourth position found them advanced close up to the original position of the defense. At this period the Light Battery opened on the 3-inch rifles and company behind the stone wall, by which this body was repulsed and obliged to re-embark. The army and marines were then free to operate against the centre and the left flank of the attack. The Light Battery also joined in the action, and the attack was compelled to beat a hasty retreat. The apprentices on Coaster's Island opened fire with the machine guns on the right flank of the attacking force, and the *Galena's* blue jackets advanced at the same time. This compelled the retreat of the right flank, and all of the attacking force re-embarked under cover of the Gatling guns in the ruins of the old fort on Coddington Point and the fire of the fleet.

The light battery advanced in pursuit beyond the prescribed position, on the ground that further pursuit would convert the hasty retreat into a rout. But any pursuit beyond the line previously indicated would have exposed the Light Battery to entire annihilation by the fleet, and this movement was therefore an error.

In order to carry out the scheme of landing operations, some assumptions had to be made which, though not violent, led to some confusion.

CONCLUSIONS.

(1) "For practice in naval tactics, day and night signaling, boat expeditions, disembarking the naval brigade, target-firing with small-arms and machine guns, and for torpedo work, ships of the *Richmond* and *Galena* class answer just as well as the most approved type of modern iron-clads." (From official report of Rear-Admiral S. B. Luce.)

(2) In running by the fort three-fifths of the squadron were probably put out of action by the guns and mines. The composition of the squadron was such that it was difficult to retain station in column; the lighter ships quickly gathered way and as quickly lost it, while the heavier ships were slow in doing either.

(3) The attack by the defending torpedo-boats was hopeless; but these

boats drew the fire of the fleet, so that the 15-inch guns in the fort were enabled to fire five shots before receiving any in return.

(4) The manœuvres demonstrated that the men who served the barbette guns were greatly exposed, and that the necessity of protection, by shields, disappearing gun-carriages, or other means, from machine-gun fire is imperative.

(5) Two out of the five vessels were put out of action by striking the mines. This indicates the high degree of efficiency of submarine mines. A passage 120 feet wide was supposed to have been cleared previous to the attack by countermining. It would be interesting to know the effect of a bombardment on a mine field, and especially if the circuits of observation mines could be destroyed by projectiles.

(6) It is considered that a preliminary attack by the torpedo-boats with machine guns would have drawn the fire of the fort and more clearly have indicated the locations of the guns mounted in casemates, provided that this information could not be ascertained by a reconnaissance.

(7) The smoke from the fort and the two leading ships concealed the *Dolphin* and the two following ships from the fire of the fort. This fact indicates the advisability of having the fastest vessels in the lead. Their speed will shorten the time during which they are exposed to the fire of the fort, and the smoke will materially lessen the effect of the fire on the slower vessels following.

(8) The batteries worked well, except that the broadside guns of the older types of vessels could not be trained sufficiently far forward to bear without sheering the ship until nearly up to the fort. This defect is absent in vessels of new types. Some of the breech-plugs of the 6-inch B. L. guns jammed considerably.

(9) Reduced charges and blank cartridges were used. The blank cartridges (Frankford) jammed in the feed of the Gatlings. A number of primers for the 6-inch B. L., 6-pounder R. F. guns, and 60-pounder rifles failed. These failures are easily remedied, but they indicate defects which can only be ascertained by practice, and which, in case of war, would be serious. The necessity of constant practice is obvious.

(10) In the operations of the naval brigade it was found to be difficult to convince the men that blank cartridges are worth running away from or that it makes any difference in what direction a blank cartridge is, fired.

(11) Some parts of the exercises would have been better performed had a clearer understanding existed beforehand of what was going to be done. Some of the captains of companies were engaged in laying mines for the enemy, and could not be present at the preliminary discussion.

(12) The report of the board of umpires, consisting of Commanders C. M. Chester and C. F. Goodrich, U. S. Navy; W. R. Livermore, Major

of Engineers, U. S. Army, and Edward Field, Captain Fourth Artillery, U. S. Army, concludes as follows:

It is hoped that these manœuvres are only the beginning of what may, on a more comprehensive scale, give our service an equivalent for the autumn manœuvres of Europe. If it should be found practicable in future to draw upon the resources, which the militia of the States afford, by adding to the strong nucleus of regular forces such of their large and well-organized regiments as are conveniently located, it is thought that more valuable results in the matter of marching and operations may be obtained than by the formal camp, with its somewhat narrow routine and the sham fight, which is usually the popular adjunct to the governor's day.

TORPEDO ATTACK ON THE ATLANTA.

In the night of October 11, 1887, the U. S. S. *Atlanta* was attacked by a flotilla of torpedo-boats from the other vessels of the North Atlantic Squadron at Newport, R. I.

The *Atlanta* was supposed to be at anchor in an enemy's harbor and entirely dependent upon her own resources for a successful defense against any attack by the enemy, while a blockade to seaward cut off all chance of escape.

An order issued by Rear-Admiral S. B. Luce, commander-in-chief of the North Atlantic Squadron, prescribed the rules and general programme of the operations. The rules were drawn up by a board of officers in attendance at the Naval War College, and consisted of the following:

(1) To judge of the events connected with this attack several umpires will be stationed on board the *Atlanta* and one umpire will be appointed to each torpedo-boa- and guard-boat.

(2) Umpires are to consider themselves as such, not only for their own special posts, but for any operations of attack or defense which may come under their observation.

(3) Any torpedo-boat shall be judged out of action—

(*a*) When under fire of heavy guns a sufficient time to receive three rounds therefrom—say one minute.

(*b*) When under fire from rapid-fire guns a sufficient time to receive fifteen rounds therefrom, or three-quarters of a minute.

(*c*) When under Gatling-gun fire within 500 yards, for one and a half minutes.

(*d*) When under a small-arm fire of not less than ten pieces within 500 yards for one and a half minutes.

(*e*) When under effective fire during fifteen seconds while within the beams of the search-light.

(*f*) When exposed to a stream of water from the ship's hose during fifteen seconds.

(*g*) When within effective range of a defense mine or torpedo at the time of its explosion by the defense.

(4) Any torpedo-boat succeeding in attaching an explosive charge to any part of the defense will make her claim by making her number three times by blasts from her whistle, and shall be free to retire.

(5) Any torpedo-boat which, without being discovered or ruled out, shall approach the *Atlanta* to within 20 feet shall be considered as having torpedoed her, and will make her claim by firing a green Very's signal-light, and shall be free to retire.

(6) Guard-boats which fail to discover the approach of a torpedo-boat until the same is within 20 feet from them shall be considered as destroyed.

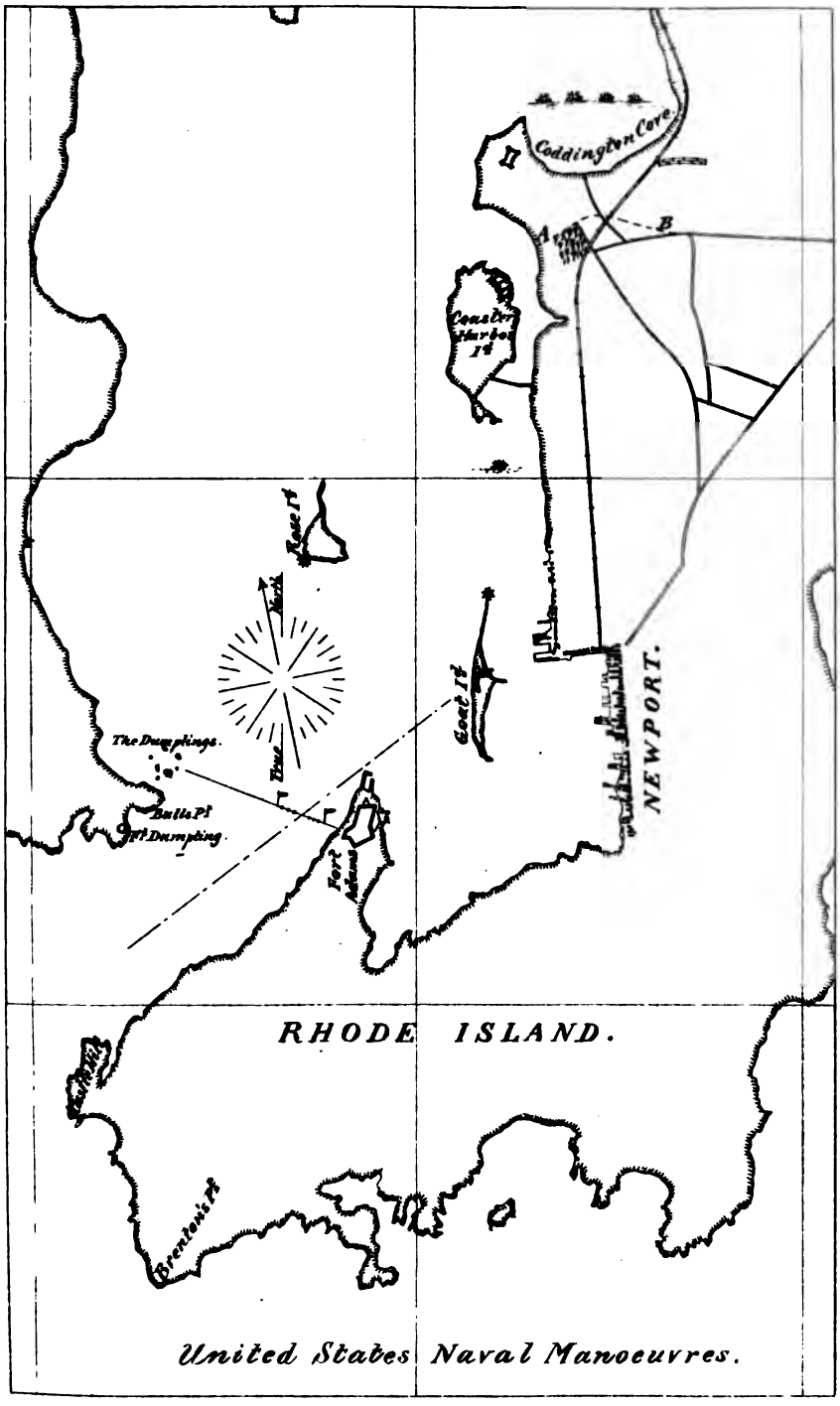

United States Naval Manoeuvres.

b

(7) When a torpedo-boat is put out of action from the *Atlanta* the fact will be signified to it by hailing it or by Very's signal discharged in the direction of the boat if not within hail. The boat judged out of action and notified of the fact shall immediately acknowledge it by reporting her number if within hail; otherwise by making her number once by whistle.

(8) The decision of an umpire shall be final.

(9) If the *Atlanta* is torpedoed once she shall be considered as disabled, and if torpedoed twice as destroyed.

(10) The termination of the attack will be signified by the recall sounded by bugle from the *Atlanta*.

The *Atlanta* prepared for defense by shifting her anchorage some distance from the other vessels of the squadron to a point about 1,000 yards southwest of Rose Island.

The ship was cleared for action, and in addition made the following arrangements for defense:

A 5-inch steel hawser was passed around the ship just clear of the water, and 20 feet from the ship's side. This was supported by booms and outrigger spars, and carried 20 torpedoes, 30 feet apart, arranged with contact circuit closers, so that any boat striking the hawser would be exposed to destruction by one of these 20 torpedoes. A whale-boat was towed astern carrying a steam pump hose in position to direct a stream of hot water from the boilers on approaching boats. A similar arrangement for throwing hot water was rigged out ahead. A hawser ran out to a float of spare spars and empty water-casks anchored 50 yards astern of the ship, and supported a number of ropes to foul the screws of hostile steam launches. The *Atlanta's* boats served as guard-boats.

The battery was disposed to have five guns fire fore and aft an eight guns broadside.

Two electric search-lights were mounted, one aft on the starboard side and one forward on the port side, arranged to throw a cylindrical beam of light of 16,000 candle-power to effectively illuminate a range of 1,500 yards.

The torpedo-boat flotilla, under the command of Commander C. M. Chester, U. S. Navy, consisted of six steam launches and four cutters armed with spar torpedoes, primers only being used, and seven whale-boats and gigs armed with hand torpedoes and to serve as decoy-boats.

After dark the boats went to different positions. The four boats of the *Richmond* went to the west end of Rose Island and kept in ambush until the time set for the attack. All watches were compared at sunset. The four boats of the *Dolphin* went to the south end of Goat Island, the *Galena's* boats sought shelter at the wharf at Fort Adams, and the *Ossipee's* boats remained alongside at the outer anchorage off Goat Island.

The time set for the attack was at 8.15 p. m., when the boats separated to approach the *Atlanta* from all sides. The whale-boats and gigs acted chiefly as decoys to occupy the attention of the defense while a torpedo-boat might slip in without observation.

The search-light proved to be highly efficient, and by 8.45 p. m. every boat of the flotilla was decided out of action by the umpires, in accordance with Rule 3, section "*e*," because exposed to effective fire for fifteen seconds within the beams of electric light. Not one boat succeeded in getting sufficiently near to engage the guard-boats, obstructions, or other features of the defense.

The flotilla was defeated by the *Atlanta's* search-lights so quickly that no practical tests were afforded of the other means of defense.

V.

ELECTRICITY ON SHIPBOARD.*

By Lieut. J. B. MURDOCK, U. S. N.

It seems almost impossible to realize that the modern development of electricity which has brought it into commercial use throughout the world, is included within so brief a period as a dozen years. The patents on the incandescent light date back only eight or nine years, while to-day over two million lamps are in use in this country alone. Electricity is aggressive, and is pushing itself into many new fields. The next few years bid fair to witness new practical developments, and no wise man would venture to lay bounds to the extent to which electricity will enter into the civilization of the next decade.

It becomes us to inquire in what ways this new agent may be utilized in our reconstructed navy. Back of the popular willingness to support the navy is the wish that, however small it may be in comparison with others, it must in its quality be unexcelled by any. A small but thoroughly efficient service will never lack popular support. Efficiency can be maintained only by an adoption of everything that is best in the mechanical development of the day. In view of the advances in construction, in engineering, in metallurgy, in ordnance, and in electrical developments, although radicalism is to be deprecated, conservatism is impossible. We must at least keep abreast of the times, and it is better to lead than to be hopelessly in the rear as our whole naval policy left us for twenty years.

The part that electricity is to play in the future in naval service is certainly extensive. The object of this paper is to endeavor to present some of the many peculiar features of our naval requirements and perhaps to indicate some directions in which this new agent may be utilized with advantage. Too frequently bad results have followed from the use of commercial apparatus on shipboard, and it is extremely desirable that naval problems should be solved more frequently by officers whose knowledge and experience will allow them to make such changes as are necessary. The inventive genius of the country is always at the command of the Department, but its use should be guided and perhaps

* The thanks of the writer and of the Office of Naval Intelligence are greatly due to the courtesy of the editors of the Electrical World and the Electrical Review and to Messrs. Westinghouse, Church, and Kerr, who have kindly furnished cuts and other valuable data.

outlined by officers who can state not only the requirements to be met, but also restrictions and qualifications which otherwise may be overlooked.

The principal application of electricity on shipboard is in the line of electric lighting, and this may well claim first consideration. It was early seen that the incandescent light possessed special advantages for ship lighting, and installations were made in some passenger steamers several years ago. It was soon seen that modifications of methods in use ashore were necessary, and in England the growing demand of the large naval and mercantile marine led to the manufacture of special types of apparatus designed for ships' use. Until recently the small demand in this country for these types has not offered sufficient inducements to warrant their manufacture by American firms. Another reason is found in the immense commercial development of electric lighting, to supply which has taxed the ingenuity of inventor, and the resources of manufacturers, leaving neither time nor energy for special work. As the demand arises American ingenuity will meet it.

It is not necessary to dwell on the utility of incandescent lighting on the crowded and dark decks of men-of-war. Quarters become more habitable when brightly illuminated, and the morale of the ship's company as well as the general health are both promoted by furnishing good lights and air to the crew. In naval service, however, the subject of electric lighting is complicated by the necessity of furnishing vessels with the search lights, and the two methods of illumination, arc and incandescent, should be considered together. The utility of the search-light as a weapon of defense is sometimes questioned, and there may be cases when its use would be dangerous as betraying the position of the vessel. Like any other weapon, judgment must be exercised in its use, but occasions are sure to arise when it becomes a necessity, and the equipment of any vessel designed for an efficient fighting machine will be incomplete without it.

The principal requirements demanded of an electric-lighting plant on shipboard are compactness, lightness, strength, interchangeability, simplicity, economy and efficiency.

The first of these, economy of space, is of the greatest importance. On a man-of-war every cubic foot is valuable, and as the amount of necessary machinery of different kinds increases, the more imperative is the necessity for the utmost compactness. The common method employed on shore is to use a horizontal engine driving the dynamo by a belt which to secure good working conditions is given a length of 20 or 30 feet.* An installation of this kind on shipboard, occupies as much room as 30 tons of coal, or may take the hammock room of fifteen men, while the long belt is always in the way on a crowded deck or in a narrow passage, and becomes a positive danger in a seaway, when men are liable to be thrown against it. However practicable long-belt driving may be ashore, it is not adapted to ship work; and to the fact

* On shipboard much shorter belting has been successfully used. See pages 206, 207. —*Ed.*

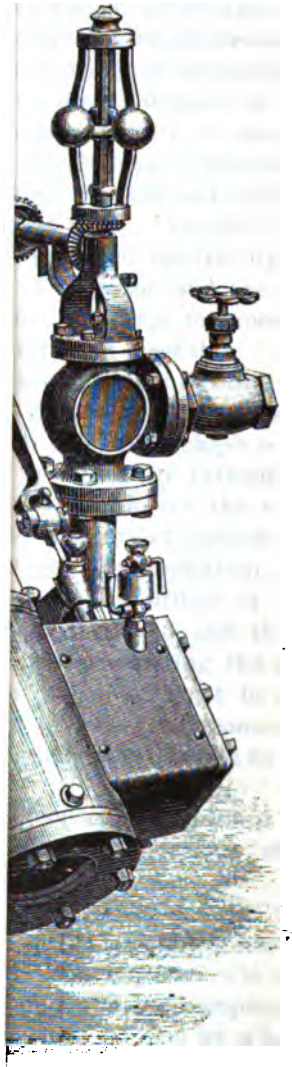

ENING GEAR.

that it has been largely used, may be traced much of the dissatisfaction which has been found in installing plants.

The apparent remedy is to shorten the belt, but this is possible only within limits. As the speeds of dynamos and engines in commercial practice are in the approximate ratio of 4 to 1, the inverse ratio must exist in the size of pulleys. When, therefore, the belt is shortened greatly, the angle between the two parts of the belt at the dynamo becomes so large that the bearing-surface on the pulley is materially lessened, and the slip therefore increased. If the tension is increased so as to reduce the slip, hot bearings result. Short belting, while therefore economical of space, is wasteful in actual working by the extra liability to accident which it creates. Several improved methods have been suggested. Thus, on a number of the Atlantic liners, notably the White Star Line, the dynamo and engine are connected by multiple roping running in grooves in the pulleys of each, and the slip is thus said to be materially diminished.

While favorable reports of this method are frequently received, it is evident that when a very short belt is used, it is more liable to be in the way of operating engine and dynamo, and the more compact the plant is, the greater is the necessity for accessibility to every part.

Another method of short-belt driving is by the use of what is known as a link leather belt, made up of leather links bolted together in a continuous chain. Belts of this kind are said to have much less slip than an ordinary leather surface, and can be successfully operated with a sag of 10 degrees on the slack side of the belt. Professors Rysten and Perry have proposed a method of balancing the dynamo below the engine on pivots, so that the two pulleys are in the same vertical plane, and then making the dynamo pulleys of such size that its weight produces the necessary tension of the belt. This would not be applicable to ship use. Sometimes an extra or tightening pulley is used on the slack side of the belt, to increase the bearing surface on the pulley, but as this is increasing the tension, it is liable to produce heating of bearings, and decrease the life time of the belt.

An illustration of this combination plant which has been largely used by Messrs. Martin & Platt of Manchester, England, is shown in Fig. 1.

All short-belt methods are open to the objection of complexity already alluded to, although of course they may, with proper and perhaps continual skilled care, operate very satisfactorily.

Recourse has been had to friction gear between engine and dynamo, the pulleys being held in contact with sufficient force to prevent a large amount of slip. Friction driving of this character is largely used ashore and claims special consideration as admitting of great compactness, while it allows easy access to all working parts. Large multiplying power may be obtained by properly proportioning the size of the engine and dynamo pulleys, and the possibility of working at high speed, admits of the use of small light dynamos. Last summer

the Sawyer-Mann Company of New York, placed a plant of this kind in the steam-yacht *Restless*. As this plant well meets the conditions

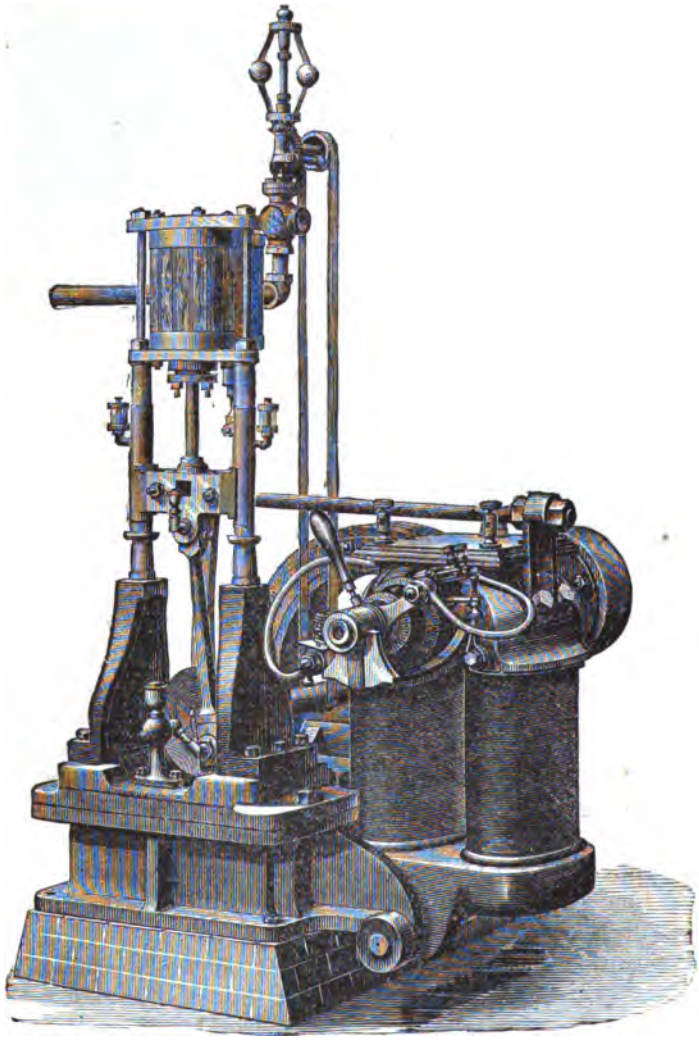

FIG. 2.—Plant of Steam Yacht *Restless*, Friction Gear.

under consideration it is illustrated in Figs. 2 and 3, and the following data are furnished:

	Pounds.
Engine weight (working at 560 revolutions)	150
Dynamo weight (working at 1,400 revolutions)	375
Bed-plate weight	75
Total weight	600

	Inches.
Height over all	40
Width over all	29
Length over all	30

The output of the dynamo is 25 ampères at 75 volts. It is shunt wound.

The pulleys have a bearing surface of 4 inches, and are paper faced. The working steam pressure at full head is 60 pounds. The requisite

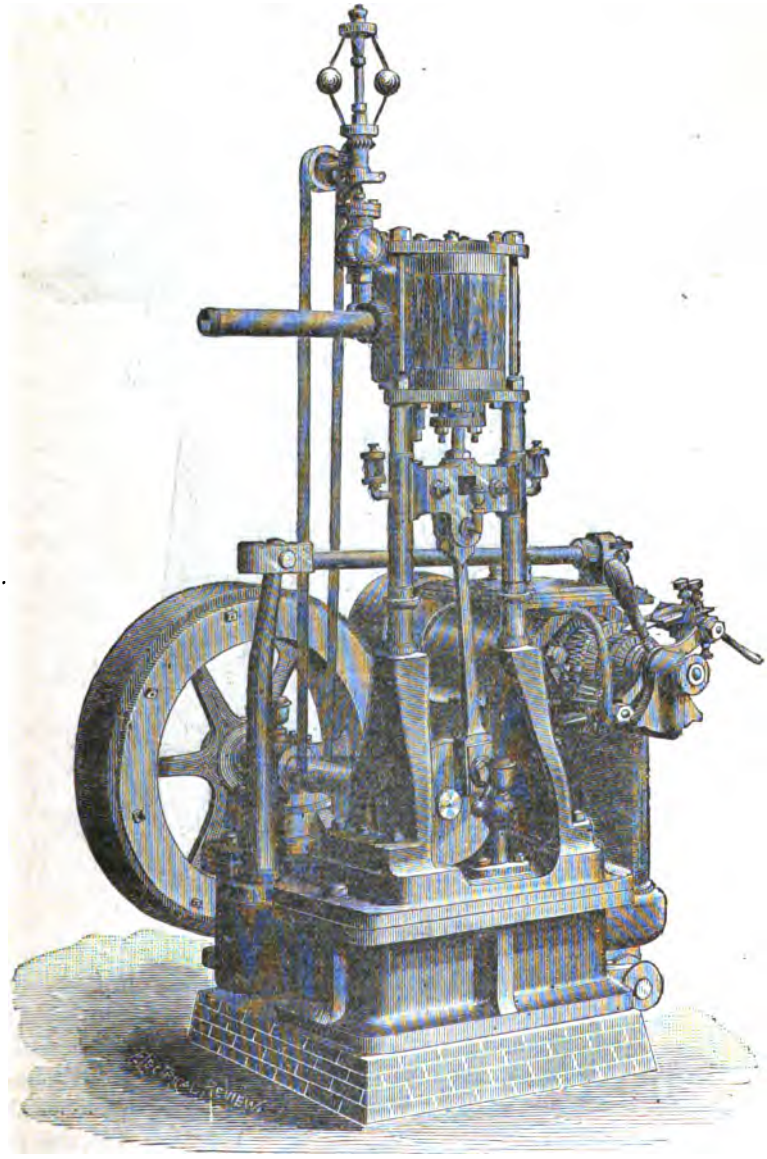

FIG. 3.—Plant of Steam Yacht *Restless*, Friction Gear.

amount of friction is obtained by an adjustment screw on the horizontal bar of the figure. The dynamo being balanced on pivots, so that none of its weight comes on the armature bearings, any required friction that may be found necessary, is readily obtained.

Another recent friction plant is shown in Fig. 4. It consists of a Victoria dynamo balanced in a cradle on pivots above the engine shaft, and a Raworth engine, the cast-iron fly-wheel of which is in contact with the paper-faced dynamo pulley directly above it. The requisite friction is obtained by means of two screw rods which act on bearings outside the pulleys. The plant figured occupies a floor space of about 5½ by 3 feet and operates 140 incandescent lamps.

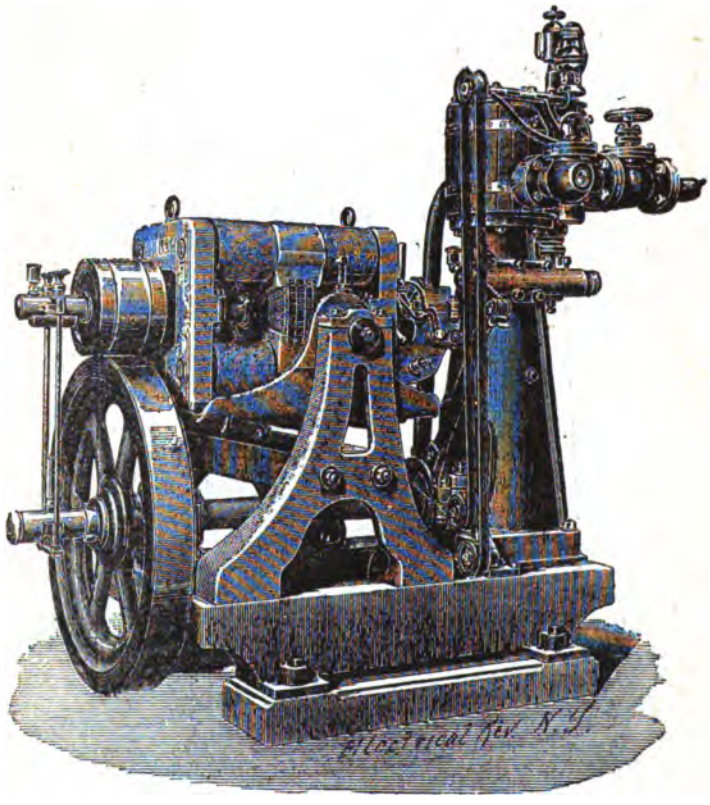

FIG. 4.—Raworth Engine and Victoria Dynamo.

This plant is manufactured by the Anglo-Brush Corporation.

Friction gearing has not been sufficiently used to determine its durability. While compressed paper seems to be almost indestructible, the transmission of a large amount of power through so small a bearing surface can be obtained only by considerable pressure, which is liable to cause heating of bearings. If the pressure is not high, the slip on the pulleys causes heating and deterioration of their surfaces. It is true, however, that a worn-out pulley may be readily replaced. Another objection to its ship use is in the fact that when there is any motion in the vessel, the tendency of the dynamo to swing on its pivots, is liable to

vary the pressure on the pulley faces, and every such variation affects the slip, and consequently the E. M. F. of the dynamo, causing flickering in the lights.

The requisite dynamo speed could of course be obtained from a low-speed engine, by cogged-teeth gearing. This method has not been used to any extent, although very commonly employed with electric motors to reduce the speed to any desired limit. The principal objections to such a connection are loss of power in transmission, and noise of working. There is a certain per cent. of loss in each gearing, and the total loss would then depend to some extent on the amount the speed was to be reduced. In ordinary cases, where the pulleys could be geared directly to each other, the loss would not be great. In order to avoid the noise and jar of metal teeth at high speeds, experiments have been made, with quite good results, of using leather or paper.

The preceding methods are merely different ways of obtaining the multiplying speed made necessary by the dynamo's running so much faster than the engine. If the speeds were the same, the simplest mechanical solution of the problem would be to connect the shafts of engine and dynamo directly; and this connection presents so many advantages, that in Europe a class of slow-speed dynamos have been made especially for this purpose. No American firm has as yet constructed these machines for the trade, although a few have been made for special purposes, and in such cases the expense is of course heavy.

The system of direct connection commends itself by its simplicity and good mechanical arrangements, and answers all requirements of compactness and strength. The principal objection urged against it, is the difficulty of getting the four bearings of engine and dynamo in line, and a flexible or clutch coupling, which allows a little adjustment is sometimes introduced. When the bed-plate is rigid, however, there seems to be no danger of the bearings getting out of line, if they are once properly placed by the maker, and a rigid coupling is, in practice, used without difficulty. The best evidence of the value of direct connection is that it has been used in all the leading European navies for years with complete satisfaction, and no other system is now used.

VOLTAGE.

It is vitally important, in so complex a structure as a modern cruiser, that there should be no unnecessary machinery. Already dynamos are in use in our service for operating search and incandescent lights, and, if possible, should be so made as to be able to fulfill either of these purposes. At present this is not the case. The search-light plant, as supplied to four United States vessels, is of French manufacture, and consists of a Brotherhood engine directly connected to two Gramme dynamos. The incandescent plant differs in the six vessels in which it is used, but is always an American dynamo belted to a horizontal engine. Neither of these plants will satisfactorily perform the duties of the other. This

fault has often been pointed out; but as it is to-day the principal evil in our naval electric lighting, this article would fail of its purpose if it did not dwell upon it at some length, and indicate steps by which it may be overcome.

The solution is simply to introduce dynamos which will operate either search or incandescent lights, or in case of necessity both at once. This can be done. It will be well to examine somewhat closely into the conditions to be met.

The search-light used in the navy is the inclined hand-lamp of Sautter, Lemonnier & Cie. in the Mangin projector. (The latter is not made in this country, but hand-lamps have been constructed by the Brush Electric Company.) If universal use is any evidence of fitness, this apparatus is the best yet devised. As it is used in our service, it may not be amiss to append a short description of the construction of the projector and the connections.

The following details and the plate are taken from an article by the writer, and published in the Proceedings of U. S. Naval Institute, No. 21.

The Mangin projector consists of a concave-convex lens, the convex surface having the greater radius. The concave side is turned to the light and the convex surface is silvered.

It is therefore a reflector, but the radii of curvature of the faces are so calculated that the two refractions at the concave surface almost completely destroy all aberration, and this gain more than counterbalances the loss by reflection. The beam has a divergence of only 2°, being only 15 metres in diameter at a distance of 1,000 metres. By moving the lamp slightly away from the mirror the divergence can be increased. This projector was recommended as the result of the Chatham experiments. That of 90 centimetres diameter was stated to give twice the light of that of 60 centimetres. It is made by Sautter, Lemonnier & Cie., of the following sizes, and is furnished with lamp and connections complete:

Thirty centimetres diameter, focal distance 16 centimetres; 40 centimetres diameter, focal distance 24 centimetres; 60 centimetres diameter, focal distance 33.2 centimetres; 90 centimetres diameter, focal distance 76 centimetres.

In the accompanying Fig. 5, the projector *B* is placed at one end of a cylinder *A*, in which openings covered with concentric plates are arranged for the escape of hot air. The cylinder is supported on trunnions, one of which carries a screw thread *c* (fig. 1), connected with the endless screw on the axis c^1. By turning the wheel c^2, any desired elevation or depression can be given, and the cylinder held firmly in place by the clamp c^3. The tube a^2 carries at one end a small lens and at the other a total reflecting prism, and is directed towards the focus of the mirror. By this the person in attendance can examine and focus the carbons. The trunnions of the cylinder are supported by two iron arms, *D*, in each of which an insulated copper wire is placed, as shown by the

Fig. 5.

MANGIN PROJECTOR.

Fig.1.

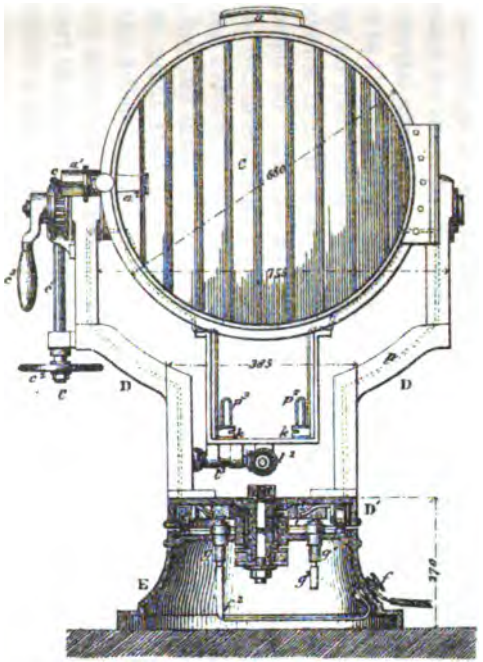

Fig.2.

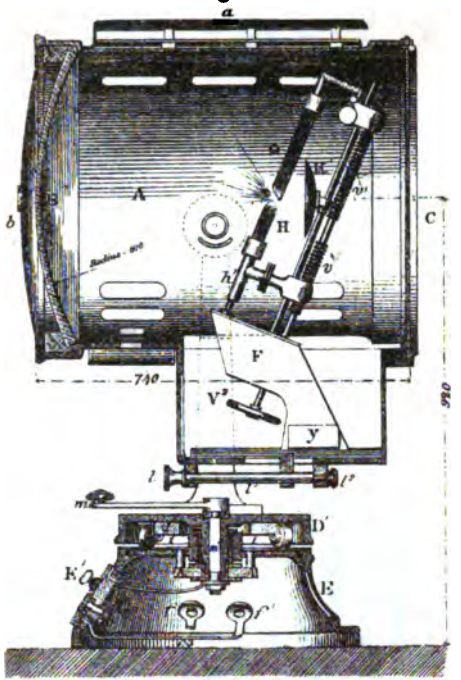

Fig.3.

dotted lines. The arms rest on a disc D^1, which turns by means of bronze rollers e on the bedplate E, D^1 being clamped by the handle m (fig. 2). Attached underneath the disc D^1 is a piece of wood bearing on its under surface two concentric bronze rings, connected with the copper wires p. Against each of these rings presses a metal cap j (fig. 3), kept in contact with it by the spring g. The current then entering at f (fig. 1), passes through f to g, thence to one of the bronze rings, and by the wire in the arm D to the plate p^2. The return is by p^3 and the other arm D, but a switch is introduced at E^1. The figure shows the inclined hand lamp of Sautter et Lemonnier in position, but admitting of slight displacement by the screws l and l_3. On the sides of the base of the lamp are plates y (fig. 2), which are in contact with the wires p_2 and p_3 (fig. 1). The current ascends through the metal of the regulator and the screws v and v^1 to the upper carbon, and from the lower carbon through an insulated wire inside the tube h^1 to the other terminal y. A small mirror, K^1, is placed behind the arc, and in the large projectors a converging lens is sometimes placed between the arc and the mirror to intercept rays that otherwise would not strike the mirror. The door C (fig. 1) causes the rays to diverge in a horizontal plane. A general divergence of the beam can be given by moving the lamp by the screw l. The figures and accompanying explanation are taken from the *Giornale di Artiglieria è Genio*, April, 1881.

In general terms the amount of light given by a search light varies with the energy in the arc, an increase of energy being attended with a much greater proportionate increase of light. Although the energy in the arc is measured by the product of the two factors, difference of potential and current, it is noticeable that when it is desired to double the energy it must be done by doubling one of them, the current preserving the potential about constant. It is desirable, of course, to concentrate energy in the arc, so as to obtain a powerful light, but this can be done only by an increase of current. Experiments at the Torpedo Station have shown that it is not advisable to allow the difference of potential to exceed 50 volts, as above that, the arc is long, bluish, and variable, each of which conditions unfits it for use in the projector. The ordinary working current with the present service apparatus is about fifty ampéres, but the lamp and fittings will stand 90, when the heating becomes so great that it is difficult to work the lamp successfully. While the difference of potential should not exceed 50 volts in order to obtain a good white light, it must not fall lower than 30, the arc being so short in the latter case that the effective radiation from the crater of the positive carbon is cut off.

These are comparatively narrow limits. The incandescent lamp has, however, a greater range. Of the many kinds of lamps intended to operate in parallel, the best system for use on shipboard, the potential, ranges at present from 50 to 110 volts. It is possible to obtain a light of 16 candles, with a good durability of lamp by an expenditure of 60

to 65 watts in the lamp, but, contrary to the case of the search light, the same light can be obtained from the same energy, with any potential between the limits given. The current and potential merely vary inversely. Thus a 60-watt 16-candle lamp may be made so as to require 10 volts and 6 ampères; 50 volts and 1.2 ampères, or 100 volts and .6 ampère. There can not, therefore, be said to be any one potential that is best for incandescent lights. In ordinary use, however, the conditions of economical distribution of electrical energy require that the potential should be as great as possible, and for this reason makers have endeavored to raise the voltage of their lamps. It appears that the limit that can be attained with sufficient rigidity of the carbon to secure mechanical strength is at present about one hundred and ten volts. So high a potential is, however, undesirable for ship use, as the carbon is more liable to injury than in lamps of lower voltage, in which it can be made thicker. The objection to the lower limit of fifty volts is that as the light given off depends on the temperature of the incandescent surface, this temperature must become very much greater when the carbon is shortened, and its surface consequently reduced. This higher temperature seems to cause a more rapid deterioration of the lamp, and lamps of low voltage are in practice found to have shorter lives. On shipboard, therefore, it may be well to avoid both the extreme limits of 50 and 110 volts, and to use a lamp requiring an intermediate difference of potential.

That incandescent and search lights may be operated from the same dynamo requires, then, primarily, that the dynamo be designed to give a potential high enough for the incandescent lamp. As this will be too high for the search light, a resistance must be inserted of such a value that the difference of potential between the carbons may be forty-five or fifty volts. The search light being subject to sudden fluctuations is much steadied in its work by the interposition of this resistance, while on the other hand much energy is wasted in the resistance thus interposed. An extreme case will illustrate this point.

Let there be two dynamos, each yielding 10,000 watts in the external circuit; one giving 200 ampères and 50 volts, the other 100 ampères and 100 volts. As each search light requires 50 ampères the first dynamo will operate four lights, while the other will work only two. In the latter case just one-half the energy is wasted in heating idle resistance, and for the same consumption of coal the efficiency of the search-light plant is diminished one-half. So far as the search light alone is concerned, economy therefore dictates the use of a low potential, but as already stated good working is promoted by the interposition of a resistance in which a small amount of energy may be profitably expended.

To sum up, the incandescent lamp is generally constructed to operate between the limits of 50 and 110 volts. For reasons given neither of these extreme limits should be used on shipboard. The search light can not in itself utilize more than 50 volts, but its good working is

promoted by allowing a fall of potential in an interposed resistance, but as such fall of potential involves waste of energy, it should be no greater than is necessary.

This is evidently a case for compromise. It is extremely desirable that all naval dynamos and lamps should be designed for one standard voltage, and the foregoing is simply a résumé to indicate the leading considerations in determining on such a standard. The French navy seems to have no standard, as its different plants require from fifty to seventy volts. The standard throughout the British navy is now eighty volts, although many of the early plants used sixty-five successfully. The writer has in an official report recommended seventy volts as a good working point. It may be safely said that the standard should not be less than sixty nor greater than eighty, the vital necessity being uniformity at some one figure between these limits.

If a standard voltage existed it would be possible to adopt a type of incandescent lamp, especially designed for ship use, and to contract for it in quantities. Vessels could then be supplied from the stock in store, and in case of necessity could supply each other. A very common error is that it is always advisable to use a "system" in electric lighting, lamps, dynamos, and all fittings being obtained from one company. In details this is true, but there is no superhuman intelligence in a lamp of one manufacturer by which it can analyze the difference of potential at its terminals and refuse to operate unless this difference is produced by a machine of the same maker. With a standard voltage, lamps and dynamos could be obtained from the manufacturers whose articles are the most satisfactory, and if designed for the same potential, better working might be obtained than is possible under the system contract, in which a company furnishing a good dynamo has frequently a poor lamp.

In discussing the question of a standard voltage, no attention has hitherto been given to motors. Thus far they have not been used in men-of-war, but the Bureau of Ordnance, Navy Department, has taken steps to have one of the 8-inch guns of the *Chicago* operated by an electric motor, and, if satisfactory, the use of motors may be extended to others of the new vessels. Like the incandescent lamp, an electric motor may be designed for almost any potential, the potential and current varying inversely for the same amount of energy absorbed; and, like the lamp also, the use of high potentials is becoming the rule of commercial practice, in order to obtain economical distribution of energy over an extended area. On shipboard, where distances are small, this requirement loses most of its force, although its influence should be considered if it were found necessary to transmit considerable power. While motors may therefore be operated anywhere between the limits of sixty and eighty volts already given, their extended use would favor the adoption of a standard nearer the upper limit.

The type of the navy dynamo is next to be considered. If distribution to search lights, incandescent lights, and motors is to be made in parallel by dynamos of the same type, the requirement is that of the best method of keeping a constant difference of potential between the mains. The series dynamo is unfitted for this purpose, and is therefore at once disqualified. The shunt dynamo is very largely used in distribution in parallel, particularly in this country, where central station work by shunt dynamos has reached a development unknown elsewhere in the world. The shunt machine is easily regulated by a variable resistance in the field circuit, by which its potential may be kept constant with either a varying load or an irregular speed of the driving engine. This regulation is generally performed automatically, but the apparatus employed is probably too delicate in its operation to be used on shipboard, where the steady support required by most commercial apparatus is unattainable. Unless the armature of a shunt dynamo is of so small resistance as to be practically negligible, any sudden variation of load, such as is liable to occur when search lights or motors are in use, causes a variation in the potential at the terminals, and this has to be re-established by hand regulation, as incandescent lamps in circuit are endangered by such fluctuations.

The compound dynamo has both series and shunt coils on its field magnets, and might therefore be reasonably expected to possess some of the advantages of each system. If a constant difference of potential is to be kept up by a series machine, it can only be done by increasing the speed as the resistance of the external circuit increases. If the same purpose is to be fulfilled with a shunt dynamo of constant field resistance, the speed must be diminished as the external resistance increases. If the dynamo have both series and shunt coils, it is therefore possible to foresee that they could be so proportioned as to preserve a constant potential at a constant speed, through wide variations of external resistance. A machine of this kind is therefore automatic in its action, the one condition of constant potential being the preservation of *constant speed.* The regulation is therefore very largely thrown upon the engine. In practice the dynamo is not absolutely self-regulating, as the heating of the magnet coils changes their resistance, so that the difference of potential is somewhat higher on starting than after several hours' run, and a few machines have adjustable resistances in the shunt field to allow of sufficient variation to overcome this heating.

The compound dynamo when properly constructed operates search lights, motors, and incandescent lights equally well. Its mission is to automatically preserve a constant potential against all external influences tending to change it. It should, however, be treated fairly. It should not be short-circuited, nor expected to work much beyond its normal full load. If the search light is to be operated, the potential at the lamp must be reduced to 50 volts by dead resistance. Thus, in

case of a search light operated from a 75-volt compound machine with 50 ampères, the resistance must be such as to have a fall of 25 volts, or $R = \frac{E}{C} = \frac{25}{50}$, or one-half an ohm. If the carbons are kept in contact the current passing is of course equal to $\frac{75}{\frac{1}{2}}$, or 150 ampères, and it might be possible to injure the dynamo by such a current. The arc should therefore be struck quickly, the carbons being separated as soon as the switch is closed. If now, it is wished to increase the light, as is done with the service outfit by coupling the dynamos in parallel, it is necessary only to cut out a portion of the interpolated resistance. It will then be found that the difference of potential remains about the same, but that more current passes. Thus, if the resistance in the above case were diminished to one-third of an ohm, as 25 volts is still taken up, the current passing is increased to $\frac{25}{\frac{1}{3}} = 75$ ampères. If no resistance whatever is used, the dynamo is short-circuited when the carbons are together and is liable to injury, and is, moreover, called upon to produce a different potential from that for which it is designed. Neither dynamo nor search light will work properly under such circumstances and should not be expected to. When resistances are properly adjusted, arc and incandescent light may be operated simultaneously. The Torpedo Station dynamo, hereafter described, habitually operates two arc, and about one hundred and fifty incandescent lights at the same time.

From the considerations thus far advanced, it seems that the best plant for ship lighting is a slow-speed compound dynamo directly coupled to its engine. Such plants are almost universal in European navies, and although we should decide our own problems, it can not be overlooked that foreign experience has shown that this combination seems better adapted by its strength, simplicity, compactness, and general utility to the peculiar conditions of naval use than any other yet devised. As a rule every ship should have at least a duplicate plant, the power of the two being sufficient to satisfy the maximum probable demand, while one will meet the ordinary requirements. Although incandescent and search lights may be operated from one dynamo, it may be better in small vessels to use machines for the search lights, while the other is in the incandescent plant. A good arrangement seems to be that of the French armor-clad *Courbet*, where the search lights are in one circuit, the incandescent lamps required in day-time in another, the night lamps in a third, and battle lamps in a fourth. The ship has four similar plants of compound-dynamo and Mégy engines, and by appropriate switches any dynamo can be placed on any circuit. It is always safe to introduce more lamps than the full load of the dynamos, as all are not used at once, and the same plan can probably be followed with motors, although in this case a somewhat closer analysis is necessary.

The slow-speed dynamo is a distinct machine, and should be designed as such. Through long practice with certain trade types of frame, in which a uniform quality of iron is used, dynamo manufacturers have general rules for winding their machines, and can fulfill with reasonable accuracy any order for a dynamo which shall have a specified output. In this country, however, if a slow-speed dynamo is desired, the order is filled by selecting the frame of one which nominally has double the output, and running it at much less than the nominal speed. This is not a slow-speed dynamo, but a high speed at reduced power. It is like trying to pass a well-developed man as a boy, because he can do a boy's work. In a good slow-speed machine the design is so modified that it yields as large an output per pound total weight as does an ordinary high-speed machine. This is the problem our manufacturers have not until recently attacked.

The following figures illustrate the difference at present existing between European and American dynamos. The comparison is on the basis of watts, of normal output per pound of dynamo. As large machines are always more efficient than small ones, and as the output of any dynamo varies with the speed, strict comparisons can be made only between dynamos of the same output and speed, but the figures show the general points of difference very clearly.

Dynamo.	Output in watts.	Revolutions.	Weights in pounds.	Watts, per pound.	Manufacture.
Manchester No. 6	9,000	350	2,464	3.65	English.
Victoria H_3	36,000	350	3,700	9.7	Do.
Siemens & Halske	16,000	350	1,980	8.1	German.
Weston	16,000	390	5,860	2.7	American.
Manchester No. 7	22,500	400	4,928	4.6	English.
Victoria F_2	21,600	400	2,500	8.6	Do.
Edison-Hopkinson	39,600	420	11,760	3.4	Do.
Gramme Hd. 225	23,600	450	2,860	8.3	French.
Crompton $\frac{22}{110\ J}$	24,750	550	4,144	6.0	English.
Manchester 6 A	25,000	550	3,700	6.75	Do.
Bradley	*10,000	550	1,025	9.75	American.
Victoria D 2 S	8,400	600	1,250	6.72	English.
Gramme H Ic 200	14,000	600	2,200	6.4	French.
Ganz	50,400	670	5,500	9.2	Hungarian.
Edison No. 20	50,000	800	9,800	5.1	American.
Brush H_3	66,000	850	7,000	9.4	Do.
Hochhausen No. 8	35,200	1,000	4,000	8.8	Do.
Weston 6 W I	11,500	1,050	2,800	4.1	Do.
Brush G_4	28,300	1,050	3,025	9.3	Do.
Edison No. 12	30,000	1,200	4,340	6.9	Do.
Thomson E I	13,200	1,250	2,255	5.8	Do.
Mather (400 light)	28,100	1,300	4,000	7.0	Do.
Thomson C I	6,000	1,550	1,075	5.6	Do.

* Approximate.

It is noticeable that the highest outputs in this table are given by slow-speed machines. The general rules of dynamo construction are

now thoroughly understood, and it is possible to calculate the outputs of a machine with a fair approximation to accuracy before it is made. The principal difficulty is in the uncertainty as to the magnetic properties of the iron used. The output of a dynamo constructed of cast-iron may be increased probably 40 per cent. by substituting annealed forged iron, so with the same output a correspondingly large decrease in weight may be made. A large reduction of weight may generally be obtained by simply eliminating much useless material put in on the general idea of having the frame strong enough. Care must be taken, however, to leave plenty of iron in the magnetic circuit.

As the E. M. F. of the dynamo depends directly on the velocity with which the armature wire cuts the lines of force of the field, the same peripheral velocity of armature will generate the same E. M. F. in the same field. The peripheral velocity of a large armature at a slow speed may be the same as that of a smaller one having a greater velocity. Slow-speed dynamos have therefore, as a rule, large armatures, and these, in order to secure lightness and ventilation, are commonly of the ring or Gramme type. A large armature, however, necessitates a large field, and as this must be of great intensity considerable iron is required in the magnet cores and pole pieces, and a large expenditure of energy is necessary in the field magnet coils. A larger proportion of the total electrical energy developed is therefore generally expended in the machine itself, than is the case of these designed for higher speeds. This, however, does not conflict with the fact that the slow-speed machine may have the greatest normal output for the same weight.

Lightness at low speed is also attained by using a number of poles, or a multipolar machine. In this case the field of the dynamo is cut up into a number of parts of widely different intensity, and one turn of the armature carries the wire through several alternating fields, each very strong over a small area. The total number of lines of force cut, the arithmetical sum of all the positive and negative, may, therefore, be very large, while only a moderate weight of iron is used in the magnet cores. A dynamo of this type (Fig. 6) has recently been made in this country by Mr. Bradley, of Yonkers, which seems to combine many of the requirements of naval use. An experimental one was tested at the Stevens Institute with the following results:

Revolutions.	Volts.	Ampères.	Watts.	Commercial efficiency.
557	50	134.4	6720	84.1
547	51.1	136.9	6995	84.5
546	51.5	138.6	7138	83.9
559	45	253.8	11421	86.3
581	51	271.3	13836	86

The dynamo was thought to be overloaded in the last run. In the preceding table its output is assumed as 10,000 watts, a value which is probably not too high. The magnet cores are of Norway iron. The total weight of the dynamo is 1,026 pounds, of which 493 are soft

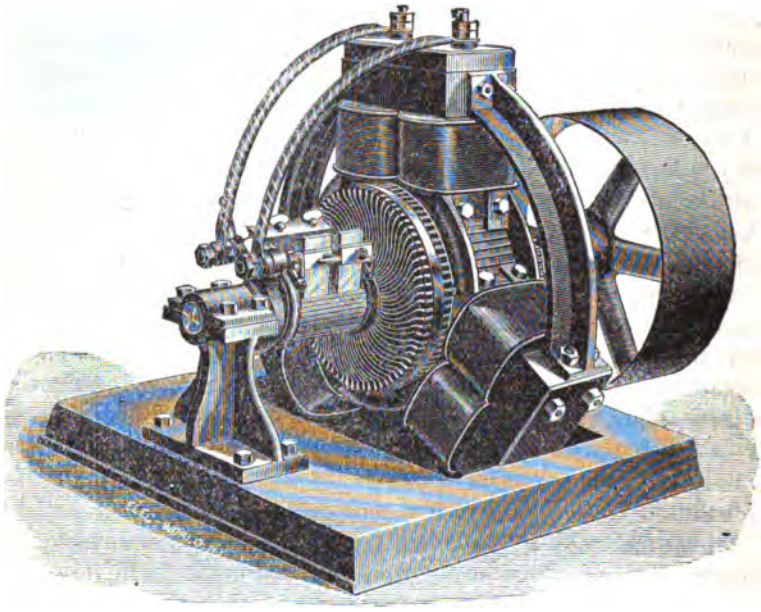

FIG. 6.—Bradley Multipolar Dynamo.

wrought-iron, 277 cast-iron, and 180 copper. Assuming 10,000 watts as a safe normal output, this gives 55 watts per pound of copper, and 170 watts per pound of armature wire—both very good figures.

ENGINES.

For the successful operation of a compound dynamo, a close and quick governing engine is essential, and in this respect American engines are unexcelled in the world. The method of governing most common in Europe is some modification of the old form of centrifugal governor, controlling the speed by acting on the throttle, and a considerable variation of speed is necessary before the throttle is acted upon. Governors of this class are effective enough for ordinary work, in which it is desirable that the speed when changed should be re-established, but are unfit for any purpose like the one under consideration, where a constant speed must be preserved.

In this country high-speed engines are generally fitted with what is commonly called an automatic governor. It operates by centrifrugal force, weights being thrown outwards by too rapid a rotation, and

pulled inward by adjusted springs when the speed is too low. The motion of the weights, however, actuates not the throttle, but the eccentric of the valve-stem, changing the throw of the valve, and governing both on the steam and exhaust sides, by giving a shorter cut-off and more cushioning if the speed tends to increase; and following longer with less cushioning, as the speed diminishes. This double control is very much more effective than the throttling of the steam, and many American engines will not vary 2 per cent. in speed over their whole range of load. The last British Admiralty specifications require that the governor should be adjustable when running, and allow a variation of 5 per cent. As there has been so little experience with compound dynamos in this country, it is impossible to say decisively whether in practice better compensation for variations in steam pressure and heating of dynamo coils, would be obtained in this way, or by the method already referred to, of having a small adjustable resistance in the shunt field of the dynamo. Most American electricians would undoubtedly favor the latter as in conformity with practice ashore, and it is certainly simple and effective.

Other requisites of any auxiliary engine on shipboard are light weight and small floor space. Most American engines are built horizontal acting, and are frequently very heavy. In ordinary installations weight is no objection, and engine manufacturers frequently make heavy cast-iron bolts to secure rigidity, without any special calculations of the strains actually imposed in working. In economy of floor space and in strength and lightness of frame, the vertical engine seems to recommend itself, so long as the total height is not too great to allow of its being installed between decks. There has been a distinct movement in European navies within the last year towards the adoption of vertical engines for driving dynamos.

In the United States the double-acting high-speed engine has probably been carried to a degree of excellence unknown abroad. A speed of 300 revolutions a minute, with close regulation and ease of working, can be obtained from the engines of a dozen different firms; but as the speed increases still further, the difficulties of balancing become very serious. It is of course desirable in the system of direct connection that both engine and dynamo should have as high speed as is possible, consistent with durability of plant, as weight and floor space are both saved. A class of high-speed double-cylinder single-acting engines has made its appearance, and as these are generally vertical, they deserve careful consideration in this paper. In this country the best representative of this class is perhaps the Westinghouse, and as such, it seems desirable to describe it with some detail. The references are to Figs. 7, 8, and 9.

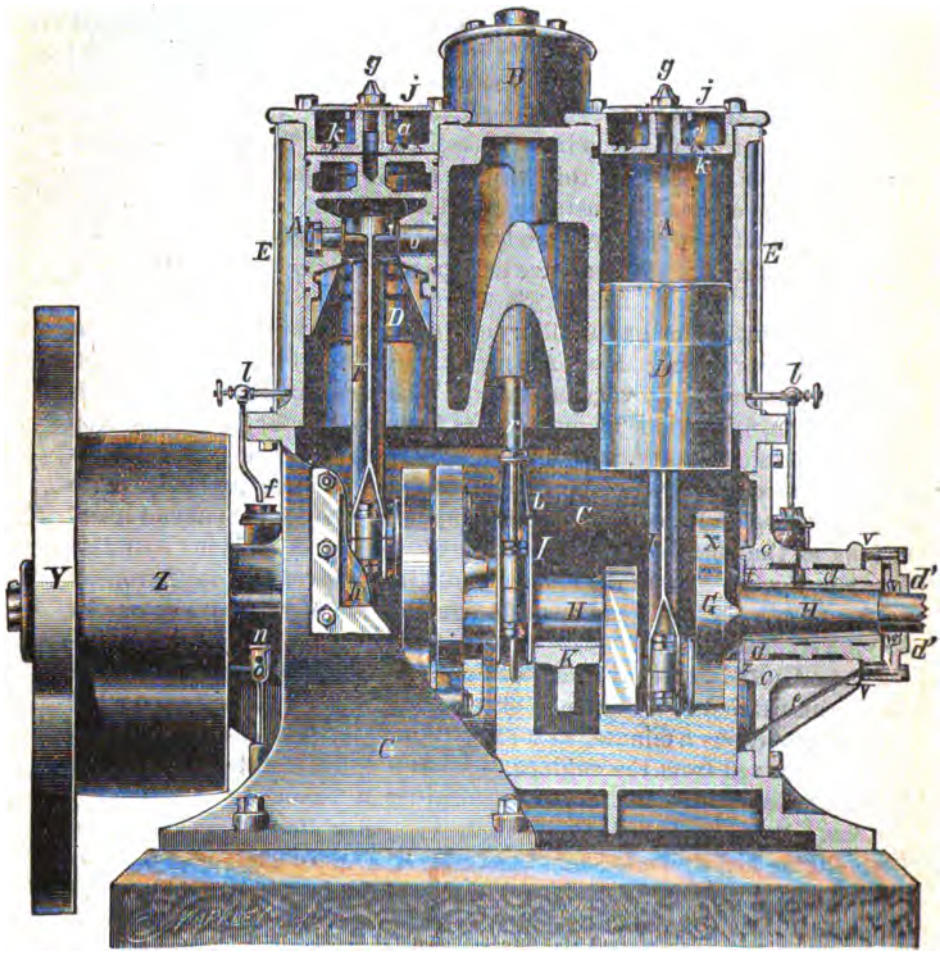

FIG. 7.—Westinghouse Engine, Section through Shaft.

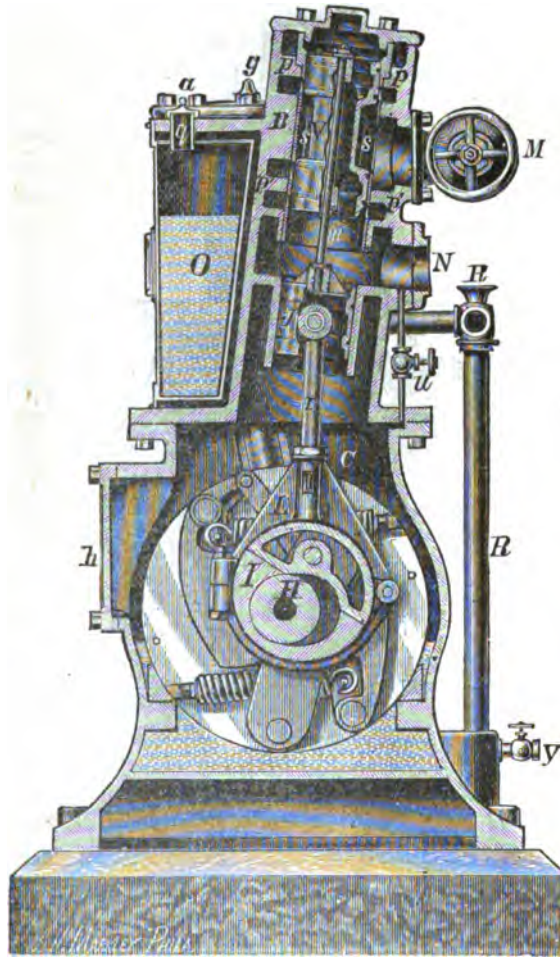

FIG. 8.—Westinghouse Engine, Cross-section through Valve.

The cylinders, A, A, are cast in one piece with the valve chamber, B, and are bolted to the top of the bed or crank-case, C.

The cylinder heads, *a*, *a*, cover the upper ends of the cylinders only, the lower ends being uncovered and opening directly into the chamber of the crank-case.

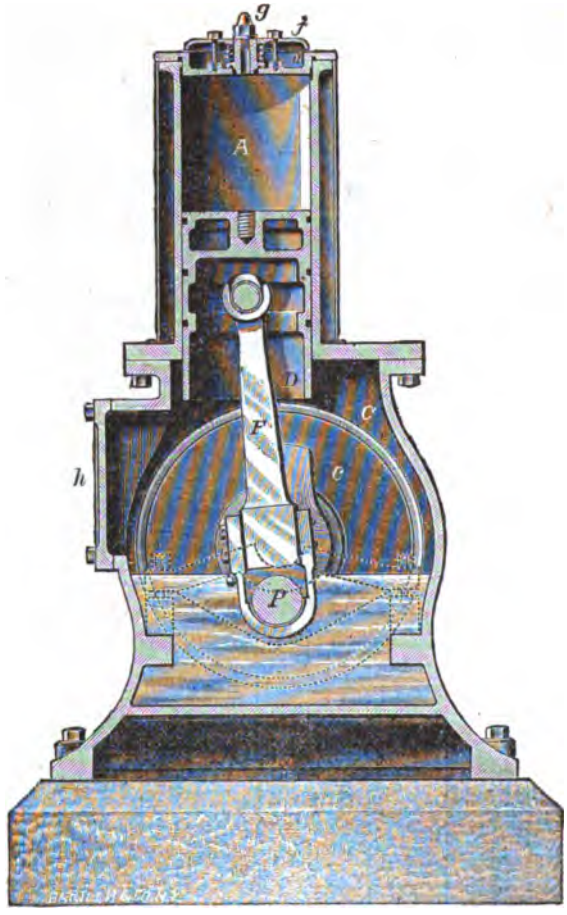

FIG. 9.—Westinghouse Engine, Cross-section through Cylinder.

The pistons, D, D, are of the "trunk" form, double-walled at the top to prevent condensation, open at the bottom, and carrying the hardened steel wrist-pins, *b*, *b*. They are packed with three rings.

The connecting rods, F, F, are made of forged steel, without a weld, drop-forged for the smaller sizes and hammered for the larger sizes. They are subject to compression only. The cranks, G, G, balanced by the bobs, *x*, *x*, the crank-pin P, and the crank-shafts, H, H, are all of steel, and may be removed by taking off the crank-case head, *c*.

The crank-shaft bearings are in the form of removable shells, *d*, *d*, lined with Babbitt metal, which is expanded into place under a hydraulic pressure of 15 tons per square inch of surface. A chamber is formed in the flange of the shell, *d*, inclosed by the cover, *d*. In this chamber and revolving with the shaft is the ring-wiper, W, which takes up the oil as it works past the bearings and returns it through the tube, *e*, into the crank-case, C. This renders all other lubrication unnecessary and keeps the engine clean. A siphon overflow, with a funnel head, *n*, prevents any accumulation of water from rising above the level of the pipe, *e*, and at the same time prevents the escape of oil. This overflow may be piped off at the hole, *o*, in the funnel head to an oil separator, from which it can be skimmed and restored to the crank-case. Collar washers, *t*, *t*, of bronze, form the end bearings of the cranks. Lead washers, *v*, prevent the taper sleeves from being taken up so as to cause binding. A center bearing, K, bridges the crank-case and receives the thrust, of the pistons.

The bonnet, *h*, is removed to give access to the cranks.

The valve, V, is of the piston variety and packed in the rings, *k*, *k*. The valve-seat is a removable bushing, in which the ports are cut, and which is then forced into its joint. It can be cheaply replaced should it ever become necessary.

The valve-guide, J, serves also in the lieu of a stuffing-box against the exhaust steam contained in the passages above it. The valve-guide, as well as the valve and both pistons, are packed with simple sprung rings of cast-iron.

The valve-stem, *m*, is keyed fast to the guide, and grips the valve without binding between the nut at the upper end and the collar at the lower end, as shown.

Water is supplied to the crank-case through the pipe R R, and the level indicated in the funnel-head of the overflow-pipe before mentioned. The water can not rise too high, but care should be taken that it never falls so low as to be out of sight in the funnel-head.

Oil for the lubrication of the internal parts is obtained by a constant feed into the oil-cups, *f*, *f*, on the main bearings, whereby their proper lubrication is first assured, and the oil afterwards returned into the case by the wipers for the benefit of the crank-pin and all the other bearings. No other oiling than through these cups is required. The front portion of the jacket conceals the oil-reservoir, O, which fills the entire space between the cylinders, and delivers to the oil-cups, *f*, *f*, by the concealed pipes and the cocks, *l*, *l*. The reservoir, once filled at *q*, will last a long time, and the entire lubrication of the engine (except the valves and cylinders, which are lubricated from the steam-pipe in the usual way) is thus introduced at one point. The cocks, *l l*, should be kept open, to allow a *constant* but slow drip of oil into the cup.

M and N are respectively the steam and exhaust connections.

The peculiar features of the Westinghouse engine and its class which render it interesting for our study are—

(1) Light weight, averaging about 100 pounds per horse-power with 80 pounds pressure.

(2) Small floor space.

(3) Single action, by which the strain on the bearings is one of compression alone.

(4) Balancing of parts.

(5) Self-lubrication and simplicity of working.

(6) Noiselessness.

The Westinghouse Company are preparing to put a line of compound engines in the market. The general design is to have vertical cylinders side by side. The space occupied is nominally slightly greater, but is in reality smaller per indicated horse-power on account of exhausting into a condenser. The engines may also be operated non-condensing if wished.

In England, both for naval and shore use as well, no engine used for direct connection seems to rank higher than the Willans compound engine, and as the details may be of interest, one of the latest class is illustrated in Fig. 10.

Each engine has two cranks, opposite to each other.

Each line of pistons is connected to its corresponding crank by two exactly similar connecting-rods, with a space between, in which works an eccentric, forged solid upon the crank-pin. The connecting-rods work at the top upon two steel pins, so supported that the pressure of the rods exerts no twisting strain upon them, and the eccentric-rod plays in the space between them.

Piston-valves are used, moving *inside a hollow piston-rod*, R, which passes completely through the line of pistons and through the ends of the cylinders. The reason the eccentric is on the crank-pin, and not on the shaft as usual, is that in this engine the valve-face (*i. e.*, the inside surface of the hollow piston-rod) *moves with the pistons.* Consequently the valve motion required is a motion *relative to the pistons*, and this is obtained by mounting the eccentric on the crank-pin, which, like the piston-rod, moves up and down with the pistons. Though its lead is set out differently from that of an ordinary eccentric, its effect upon the movement of the valves is exactly the same.

The upper crank-pin brasses of the connecting-rods are wider than the lower ones. This is because the upper brasses alone are intended to be in actual contact with the crank-pins; the lower ones are only a stand-by in case of accident. All the moving parts of the engine are designed to be strictly in "constant thrust." The connecting-rods are always in compression, never in tension. From the fact that the working brasses never leave the crank-pins, and so are never exposed to hammering action, however slight, they exhibit great durability; at the same time it is evident that no wear which can take place in them,

however great, can lead to knocking, as the connecting-rods will follow up the wear automatically.

The eccentric-rod is intended to work always in compression, in the same way as the connecting-rods, the holding-down power being furnished by the pressure of the steam in the steam-chest acting constantly upon the uppermost piston-valve.

Another reason for the moderate wear of the brasses (and eccentric-straps) is that they dip bodily into the lubricant in the crank-chamber at every revolution. In doing so they splash it to the upper ends of the connecting-rods and eccentric-rods, and into the guide-cylinders, as well as into that part of the hollow piston-rod where the guide V^1 works. The shaft-bearings are at all times partly immersed in the lubricant. The lubrication of the working parts (other than steam pistons and valves) is thus completely automatic, and gives no trouble whatever.

In Fig. 10 the right-hand line of pistons and the piston-rod are shown in elevation, the ports are shown upon the piston-rod in black. The left-hand line of pistons is shown in section (except the upper part, which for greater clearness is shown in elevation), but the piston-valves inside the hollow piston-rod are shown in elevation. There is a separate sectional view of one line of valves.

The two steam-chests are in communication with each other, as shown. Each hollow piston-rod, R, through which the steam is conveyed to the cylinders, passes into the steam-chest through a gland, G^4, in the cover of the high-pressure cylinder; the gland consists of cast-iron spring packing-rings similar to piston-rings, but pressing inwards against the piston-rod instead of outwards. (Attention may here be called to the other similar glands, viz, G^3, which separates the receiver from the low-pressure cylinder, and G^2, which separates the exhaust-chamber from the guide cylinder.)

In each steam-chest is a sleeve, S, not able to move in a vertical direction, but free to rotate to a small extent round the hollow piston-rod, upon which it is an easy fit. The sleeve has three deep inclined notches in its upper edge, and there are three corresponding spiral ports in the piston-rod, marked 7, 7 (all ports are indicated by plain numerals, without letters). As the top of the piston-rod is closed steam can only enter it when the ports 7, 7, are in the steam-chest *and above the sleeve.* According to the height at which the ports are cut in the rod, and to the angular position of the sleeve, the ports enter the sleeve earlier or later in the stroke, and cut-off takes place. The sleeves are rotated by the rod, F, which can be nipped and held tight in any position by a screwed taper sleeve through which it passes. There is a small hand-wheel, W, with a threaded boss, upon the sleeve. On running this higher up, it nips the sleeve and the rod; on easing it down, it frees the rod. By drawing the rod farther out, the cut-off is made earlier; by pushing it in, later. There are marks on the rod to indicate the period of the stroke (measured in inches and half inches from the

commencement of the stroke) at which cut-off takes place; the end of the split sleeve serves as the pointer by which the marks are read.

Where the variable gear is not fitted, the cut-off is effected by the ports 7, 7, (not then spiral, but a plain ring of holes) entering the gland, G^4, and so leaving the steam-chest.

The course of the steam through the engine can best be followed by confining attention at first to the pistons of the left-hand cylinders, which are taking steam, and which have completed one-fourth of the down-stroke.

The ports 7, 7, are still in the steam-chest, though they are approaching the sleeve, when cut-off will take place. Steam is entering the rod, R, as shown by the arrows, and is passing out again by the ports 6, 6, into the high-pressure cylinder. The piston-valve V^4, which commenced to uncover the ports 6, 6, when the pistons were at top-stroke, is now nearly at its (relatively) lowest position. So, of course, is V^2, which is admitting steam to the low-pressure cylinder from the receiver by way of the ports 4, 4, and 3, 3, and will continue to do so until the ports 4, 4, leave the receiver and enter the gland, G^3.

At points in the stroke which depend therefore upon the positions given to 7, 7 and 4, 4, and upon the position of the sleeve S (as before explained), steam is cut off from the high and low pressure cylinders, respectively.

Shortly before the pistons reach the bottom of their stroke, V^4 and V^2 (then moving upwards) begin to pass above 6, 6, and 3, 3, respectively, and to allow the steam to pass downward through the hollow piston-rod and out again by 5, 5 and 2, 2, into the receiver and into the exhaust-chamber, respectively.

It is to be noted that during the up-stroke the steam in the high-pressure cylinder is merely transferred from the upper side of the high-pressure piston to the lower, with little change of volume or pressure, the high-pressure cylinder at this time practically forming part of the receiver.

The water above the pistons drains downwards through the ports 6, 6, and 5, 5, and through 3, 3 and 2, 2, *during the whole of the exhaust stroke;* it has not to be carried by the piston to the top of the cylinder, and then driven out suddenly through the port in a more or less upward direction, as is the case in all other forms of vertical engines. The Willans engine has therefore unique advantages in getting rid of water from the cylinders.

V^3 maintains a separation between the ports 5, 5 and 4, 4, and V^1 is a guide for taking the side thrust of the eccentric-rod.

The right-hand line of pistons (shown in elevation) is upon the up or exhaust stroke. The valves are necessarily invisible, but the course of the exhaust steam is indicated by arrows.

In any engine running at high speed, the moving parts can only be kept in compression upon the up-stroke by very powerful cushioning,

WILLANS' 12—INCH CEN

With 6-inch Stroke and

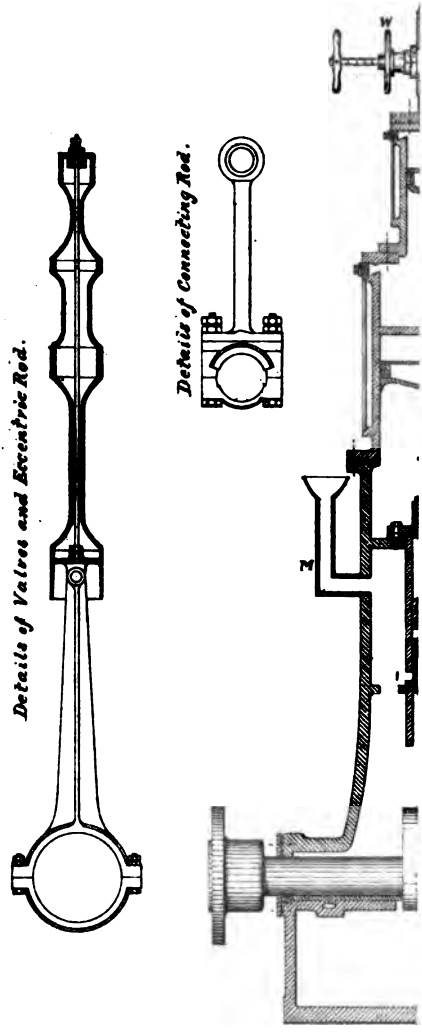

which is rarely obtained in other high-speed engines without excessive compression in the cylinders, involving wasteful use of the steam. Sometimes when a high-speed engine exhausts into a vacuum, sufficient cushion can not be obtained *at all*, by the usual means. In the Willans engines very little compression is given in the steam cylinders, the requisite cushioning being obtained independently by special means. It is provided (without the addition of a single moving part to the engine) by the guide pistons. These, on the up-stroke, compress the air contained in the guide cylinders, and thus any desired amount of cushion can be obtained, according to the clearance allowed. The work expended in compressing the air is given out again by its expansion on the succeeding down-stroke, and the loss, when the engine is running at good speed, is very small. There are holes, 1, 1, in the guide cylinders, which are uncovered by the guides at the bottom of the stroke. As the casing or chamber which surrounds the guide cylinders and forms part of the framing of the engine, is open to the atmosphere it is evident that the air compression always commences at atmospheric pressure, and is absolutely constant and invariable in its results, whatever alteration may be made in the destination or the pressure of the exhaust steam.

In large engines with two cranks, and in all single-crank engines, air-cocks are fitted upon the guide or air-cushion cylinders, in order to avoid compressing the air in them when the engine is being turned by hand, and to facilitate starting. If the cocks are opened at starting, they must be closed again immediately. They must never be open when the engine is running at speed, or the necessary cushion will be wanting. The cocks will be seen at a level slightly lower than the exhaust pipe, but in the front of the engine. One is shown at N in Fig. 10, but at the end of the engine, as it is not possible to show it in its proper place. In cases where air-cocks are fitted, there are of course two in a two crank engine.

The special features of this engine, in addition to those common to it and the Westinghouse, already stated, are—

(1) Variable cut-off gear.

(2) Air compression, facilitating the use of the engine as a condenser.

(3) Great economy due to being compound.

Full descriptions have been given of the preceding as specimens of engines well adapted for ships' use; but others are of course very largely employed in England. The Brotherhood had the field almost to itself at one time, but has lately been less commonly used. A compound Brotherhood has recently been placed on the market. In many small plants, the Terror spherical engine is used on account of its compactness. In France the Brotherhood has been largely replaced by the Mégy, and this in turn in the latest plants by vertical inverted cylinder engines as shown in Fig. 14. The tendency in England, France, and Germany is

distinctly towards the adoption of compound, condensing, vertical engines for direct connection with dynamos.

ECONOMY.

As yet but little attention has been devoted aboard ship towards working dynamos economically. So long as fuel is cheap it may not be a matter of vital importance whether it is wasted or not, but in time of war coal will be difficult to obtain and must be economized. But few marine plants are yet of sufficient size to render a large saving of coal possible, and small engines and dynamos are in themselves uneconomical. As, however, the indicated horse-power required increases, it becomes possible to introduce measures for more fully utilizing the energy of the coal, and on shipboard a pound of fuel saved is a pound earned.

The first and principal waste in ship plants is the loss resulting from supplying steam from one of the main boilers. Every condition of economy is violated in using a 400 horse-power boiler to furnish steam at low pressure for a small incandescent plant. Whenever room can be found aboard ship, it would unquestionably be economical to use an auxiliary boiler, supplying high-pressure steam for the electric light plants. When practicable the auxiliary might be fitted so as to admit of connection with the main boilers.

Another possible saving is in the adoption of compound engines, and if the engines are of the vertical type, this compounding will not necessarily increase either weight or floor space to any great extent. All unnecessary complexity should be avoided.

The adoption of compound engines necessitates high steam pressure, and this is in any case desirable in order to avoid excessive weights and size in the engines. In shore use, where economical considerations rule, it is now the practice to supply steam at the piston at a pressure of about 80 pounds.

Another direction in which economy is possible is in the use of a condenser. In the new cruisers, auxiliary condensers are used into which all the auxiliary engines of the ship exhaust, and this arrangement is very satisfactory. It is always a question, however, in small vessels, whether it will pay to introduce a special condenser for the electric-light engine, and in most cases it would probably be decided that the extra space acquired was really more valuable than the possible saving in coal. Very few questions on shipboard can be decided from any one point alone, and good judgment is continually called for in reconciling conditions which are apparently conflicting, as in this case.

The remaining consideration of economy is in the efficiency of the dynamo itself. This is mentioned last, not because it is the least important, but for the reason that there is now no possible justification for using inefficient dynamos. Careful and independent tests by different observers, using different methods in different countries, unite in demonstrating that dynamos will convert 97 per cent. of the energy they

receive into electrical energy, and will place 92 or 93 per cent. in their external circuit where it is available for lighting or for motors. In comparison with the great economy possible in other directions, as already pointed out, the saving of an additional 1 or 2 per cent. in the dynamo is almost immaterial.

The practical efficiency of a plant of dynamo and engine may be determined by the ratio for electrical energy in the external circuit of the dynamo to the indicated horse-power of the engine. Any bad working of either diminishes this ratio. A more complete test can be made by including the boiler, and obtaining the ratio of external electrical energy to water evaporated or to fuel consumed. The best test of this nature is probably that made by Dr. Fleming, Mr. McFarland Gray, and Mr. Liveing, on a Willans engine and Crompton dynamo.* The following are some of the data of a continuous two hours' run:

Electrical efficiency of dynamo	per cent	93¼
Average indicated horse-power		112.62
Average electrical horse-power, external circuit		82.91
Commercial efficiency $= \frac{\text{external electrical H. P.}}{\text{H. P.}}$		74.05
Water evaporated per pound of coal	pounds	7.42
Water evaporated per H. P.	do	23.2
Water evaporated per external electrical H. P	do	31.3
Mean pressure H. P. cylinder, about	do	28
Mean pressure L. P. cylinder, about	do	18

In the report made, it is stated that it was thought that the results were unfair to both engine and dynamo, as the boiler was too small for the work, and neither engine nor dynamo was near its full head. The engine was intended to develop 140 horse-power at 400 revolutions, with 140 pounds steam on boiler. Under good conditions throughout, it was thought that an indicated horse-power could be obtained from 20 pounds of water per hour, and an electrical horse-power in the external circuits from 27 pounds.

WIRING.

In no respect do the requirements of marine installations differ more widely from commercial practice than in the character of the wiring, and in the material used. In shore use, almost every kind of worthless insulation is found, and worse wire than that known as "underwriters," but appropriately nicknamed "undertakers," is used. This wire derives its name from the insurance underwriters insisting on a *fire-proof*, instead of an electrical, insulation. To the fact that the underwriters insulation is in no wise water-proof, may probably be attributed more fires and casualties than to any other cause in the history of electric lighting. Ships have been fitted with this insulation

* London, Electrician, Vol. XVI, page 430.

and, although danger to life is not to be apprehended from the low potential of incandescent dynamos, many accidents and incipient fires are on the records of the Navy Department which are directly traceable to this poor insulation. The practice of the Navy Department is now to use nothing but the best rubber insulation, protected from mechanical injury by an outside covering of lead. In one or two of the first ships in which the electric light was installed, the underwriters' wire has been replaced by a superior article. The corrosive action of salt-water and even salt-air on copper are so marked that nothing but the best insulation can be expected to give satisfaction, and in spite of the high initial cost, the best is the most economical. A full account of the practice and requirements of the Bureau of Navigation, Navy Department, is given in General Information Series No. VI, and in work done in the last year on the *Chicago* additional precautions have been taken to secure the highest attainable insulation throughout.

RECENT UNITED STATES PLANTS.

It will be interesting to examine some recent electric-light plants The reports of the Inspector of Electric Lighting gives much information in relation to the plants in use in our Navy. Only one of these, that of the *Chicago*, has been finished during the last year, although work has been performed on several in remedying defects in the original work, or in bringing them up to the present standard of workmanship and insulation. The details of the wiring of the *Chicago* and of the many new precautions taken to insure durability and efficiency, were given in General Information Series No. VI, June, 1887. The plant as now completed includes two sets of engine and dynamo, each consisting of an Armington & Sims 10½ by 12-inch engine, driving an Edison No. 8 compound dynamo. The dynamo is laid on its side underneath the engine, the armature being horizontal and underneath the cylinder; the distance between the centers of the engine and the dynamo pulleys is only about 6 feet. The dynamo is provided with the usual tightening frame. The space occupied by each set is 9 feet by 6, and both are placed in a space of 20 feet by 6. Each dynamo is designed for 100 volts and 160 ampères, at 1,400 revolutions, yielding current for 200 16-candle power lamps. This is the first vessel in our service fitted with a duplicate plant, and it is expected that one dynamo will be sufficient to supply all ordinary requirements, the other being a reserve for use as occasion requires. This plant has recently withstood the test of one weeks continuous running, using a very wide cotton-leather belt.

The *Chicago* is also fitted with a search-light outfit of two Gramme dynamos, driven by a Brotherhood engine. This plan is similar to that of the *Atlanta*, described in General Information Series No. VI.

A new dynamo has been put on board the *Omaha*. It is of 70 volts and the Thompson-Houston type. The same 9½ by 12-inch Armington

& Sims engine is still used, but instead of employing a countershaft, it is now directly belted to the dynamo pulley; the distance between centers is a little over 9 feet. The improved plant works most satisfactorily, and occupies one-half the space formerly occupied by the old one.

The *Yorktown* will have two compound-wound dynamos, each of 80 volts and 100 ampères, directly connected by means of a flexible coupling to engines making 400 revolutions per minute. These dynamos are wrought-iron and weigh about 1 pound for every 4½ Watts output.

The *Baltimore* will be installed with a similar plant of double the output.

The Bureau of Ordnance has under consideration the introduction of a Sprague motor to operate one of the 8-inch B. L. R. This motor will be worked from the incandescent light mains. The advantages sought by the introduction of the electric motor are the concentration of sufficient power on the gun-carriage to operate it, the saving of much of the space required for a steam-engine and its accessories, and the great advantage of facility of repairs to broken connections. The carriage can be operated by hand as well as by electricity, as the dynamos being exposed to injury from shot in action, it would be unwise to depend entirely on the supply of electrical energy. A chance shot would not only leave the ship in darkness, but disable the gun as well, if the hand-training gear were omitted. Experimental data may be obtained from this trial, which may lead to good results in the new cruisers.

Torpedo Station.—It had long been intended to light this station by electricity, and proposals were invited in the latter part of 1886. It was afterwards thought desirable to render this plant useful in the instruction of officers and seamen sent to the station for instruction, by making it, in some respects, conform to the requirements of ship lighting. A slow speed compound dynamo directly connected to its engine was therefore ordered from the United States Electric Light Company, the dynamo to be the same in type as a lot furnished by that company to the British Admiralty. The specifications called for a compound dynamo yielding 80 volts and 200 ampères at 360 revolutions, the contractor to furnish the dynamo directly connected to its engine. The plant was put in place by the New England Weston Electric Light Company, who chose a Westinghouse engine, their selection being approved by the station. All other work of installation was done by the station, the wiring of all the buildings, the running of underground mains, and other details being performed by the seamen under instruction, nearly all of whom took great interest in the work, several showing marked proficiency and ability.

The dynamo was in operation in June, but it was found necessary to make some alterations which involved its removal from the station in order to bring it into conformity with the specifications. It was once more in place on the 27th of August, and was tested for acceptance.

Among the tests made were the following, which are illustrative of the regulation of the machine:

Current in external circuits.	Volts at terminals.	Steam.	Speed.
26	77½	100	385
44	78½	96	385
59	79	.....	385
78	80	89	385
116	81½	86	385
146	83	.....	385
163	82½	.....	385
178	83	.....	385
182	84	84	392

The potential rose steadily towards full head, showing that the machine was over-compensated, the shunt field being slightly weak. This is sometimes an advantage, as it enables a constant potential to be preserved as a distributing point at some distance from the dynamo. As nearly all engines run faster on light load, the over-compensation is, to a certain extent, neutralized. This is shown in another run which was afterwards accepted as the standard method of working.

Currents in external circuits.	Volts at terminals.	Steam.	Revolutions.
0	80.5	87	400
24.4	80.5	86	395
47.5	81.5	87	393
71	83	87	393
89.7	82.5	87	393
109.8	82.5	88	390
127.9	81.75	88	390
162.8	82	88	390
190.9	80.5	88	388

The natural variation of speed of the engine operated to keep the potential approximately constant. The run was not of long duration, and the coils were not heated as they would be in practice, and the potential was therefore slightly high.

Before acceptance, the dynamo was run continuously for six hours with a load of 220 ampères. The tests were considered to be quite satisfactory, and the dynamo was therefore accepted. The plant as now in use is shown in Fig. 11.* While possessing many advantages for its intended purpose of illustrating the type of a ship's dynamo, it has many defects, which should be dwelt upon equally with its good points. The dynamo is a high-speed machine run slowly, not a slow-speed machine. The frame is the same as that of the No. 8 Weston, which is

* See plate opposite page 212

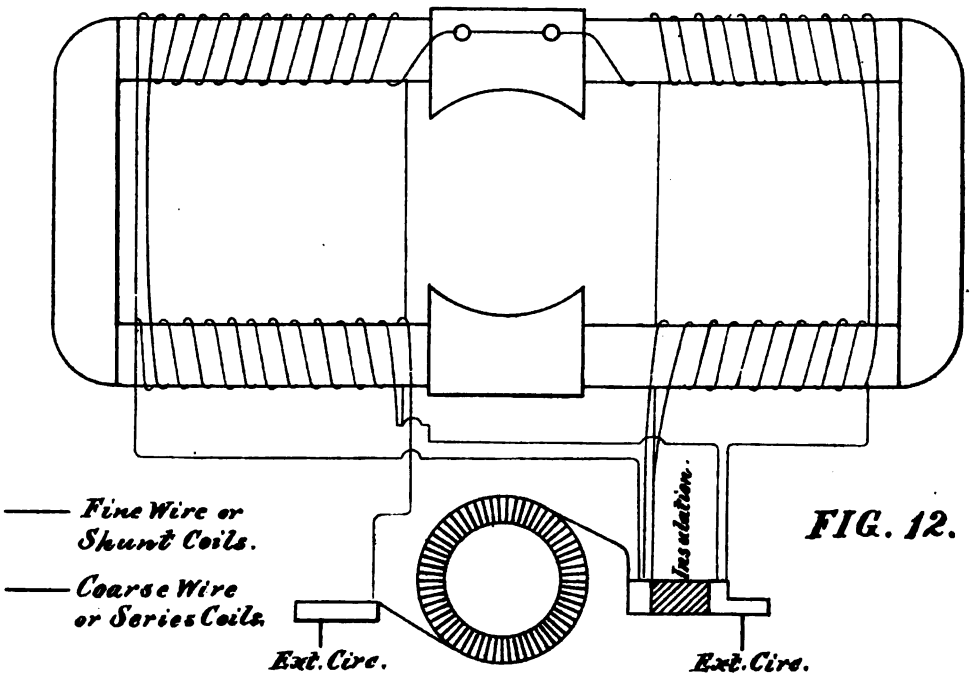

FIG. 12.

Connections of Weston Compound Dynamo.

Torpedo Station. Newport R.I.

intended for a speed of 850 revolutions and an output of 33,000 watts. When operated at 390 revolutions, producing 16,000 watts, there is evidently an excessive waste of iron. In fact, a dynamo could easily be made which would yield the same output at 390 revolutions as this machine, and yet weigh only one-third as much, and occupy about one-quarter the floor space. A glance at the figure will show that the Weston machine takes up much unnecessary room, as the armature shaft is very long, and the field magnets equally so. In England, machines of this class are frequently set on end in order to economize room. The defects of this particular dynamo are, however, in reality as instructive as are its advantages. The former accentuate the fact that there is no probability of getting real slow-speed dynamos from American manufacturers until it is made worth their while to produce them. The special work necessary to design and construct a single light-weight slow-speed machine would be so expensive as to put it out of the question.* The boat plant referred to in General Information, Series No. VI, as ordered by the Torpedo Station, was never delivered, as the conditions of weights and floor space imposed could not be fulfilled, except by constructing a special dynamo, which could not be done for the price fixed.

Up to the 9th of March, 1888, the Weston compound dynamo had been in operation two thousand six hundred and fifty hours without any mishap traceable to the dynamo. As the seamen under instruction are required to stand dynamo watch in order to become familiar with the work, the actual operation of the plant occasionally suffers from their inexperience. It has been a matter of surprise, however, how readily they take to the work, and what proficiency in general electrical work, many of them attain in the allotted course of six months.

Attention has already been called to the adaptability of the Westinghouse engine to ship lighting. The only mishap to the one at Newport in seven months was the breaking of one of the cylinder safety-plugs. During three months of this time the engine ran twenty-two hours daily for six days in the week.

The connections of the dynamo are shown in Fig. 12, and the following data may assist in comparing it with others:

No. of commutator divisions		48
No. of layers of wire on armature		2
No. of turns per commutator segment		2
Size of armature wire	inches	.257
Size of wire of series coils	do	.257
Size of wire of shunt coils	do	.127
Resistance of armature:		
Cold		.0184
Hot		.0202
Resistance of series coils, four in parallel:		
Cold		.0065
Hot		.007

* For progress made since this article was written (April) see p. 207.—Ed.

Resistance of shunt coils:		
Cold		11.00
Hot		12.1
No. of series turns on each limb		45
No. of shunt turns on each limb		990
Series ampère turns, full load		9,000
Shunts ampère turns, full load		26,700
Diameter armature core	inches	9
Total length of wire on armature	feet	480
Total weight of armature wire	pounds	96
Periphery speed	feet	1,070
Volts per yard of armature conductor		.53
Weight of dynamo	pounds	5,860
Total weight of copper	do	1,000
Watts in exterior circuit per pound of weight		2.73
Watts in exterior circuit per pound of copper		16
Watts in exterior circuit per pound of armature copper		167
Current density in armature per square inch	ampères	2,000
Energy in armature, full load	watts	862
Energy in shunt field	do	548
Energy in series field	do	280
Electrical efficiency, full load	per cent	90
E. M. F. in armature, full load	volts	85.6

FOREIGN PLANTS.

One of the most interesting installations of the last year is that of the Italian cruiser *Dogali*, by Messrs. Clarke, Chapman, Parsons & Co., Gateshead-on-Tyne. It consists of three sets of dynamos and engines. Each set has a steam turbine, working ordinarily at the remarkable speed of 9,000 revolutions per minute, and connected direct to a Parson's shunt dynamo, capable of yielding 125 ampères at 80 volts. This combination of engine and steam turbine is one of the lightest and most compact plants yet constructed, the dimensions of each of those on the *Dogali* shown in Fig. 13 being 6 feet 3 inches in length, 2 feet 3 inches high and 12 inches wide; weight 900 pounds. The steam turbine consists of a horizontal cylinder, fitted in its interior with rings of narrow inclined teeth. Inside of this, revolves a drum, having on its outer surface a number of rings, also consisting of oblique teeth, the rings of teeth of drum and cylinder interlapping, and having their teeth inclined at nearly a right angle to each other. The steam is admitted at the center of the cylinder, and, passing towards both ends, impinges on the teeth of the movable drum, causing it to revolve. It then passes through the intervals between the fixed teeth of the cylinder, which guide it in its expansion, so that it acts at an effective angle against the next row of teeth on the drum. The inclination of the teeth on the drum being in opposite directions at the two ends, the resultant rotation is in one direction only, and is accomplished without any thrust on reciprocating parts. In spite of the excessive speed there is no undue heating of bearings, all of which are kept flooded by a continuous flow of oil, produced by anair-blast.

Plant of Italian Cruiser "DOGALI."
(3 Sets.)

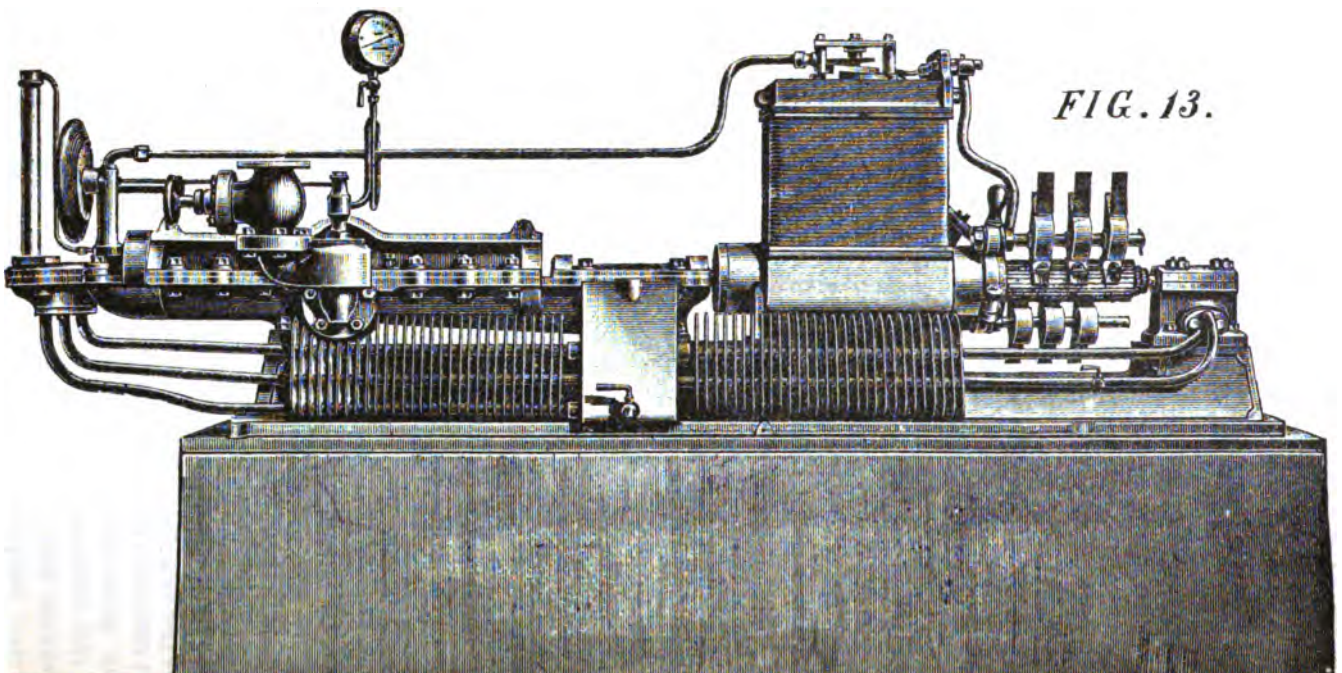

FIG. 13.

The method of regulating the dynamo is also exceedingly ingenious. A soft iron needle is pivoted horizontally on the yoke of the dynamo field-magnets, and may be adjusted in any position by a spring. One end of this needle moves over the end of a tube leading to a leather reservoir, from which the air is constantly being exhausted by a centrifugal blast on the main shaft. If the needle is in such a position that it closes the end of the air-tube, the supply to the reservoir is cut off, its sides collapse under atmospheric pressure, moving levers connected with the throttle, thus controlling the steam supply. When the field of the dynamo is excited, its magnetism causes the needle to assume a position in which the attractive magnetic force is balanced by the force of the spring. If the strength of field now varies, as it does of course for any change in the external resistance, the needle moves, changing the opening of the air-tube port, and this, by causing a motion of the throttle, changes the speed so as to reproduce the original strength of field. A small plant of this kind has been procured by the Torpedo Station for boat use, and it is found that the regulation is quite good. A marked deviation must, however, take place before the governor commences to act, so that the method is one of re-establishing a potential rather than of preserving it.

The *Dogali* is wired for about 150 lamps and is fitted with 2 search lights, each taking the full current of 125 ampères of one of the dynamos. The wiring is all done with lead-covered wire unprotected by moldings. Joints are made in lead boxes filled with cement.

The plant of the French iron-clad *Indomptable*, described in the Appendix of General Information Series No. VI, is shown in Fig. 14. Two sets are furnished, each consisting of a vertical compound engine and a compound multipolar dynamo, yielding 150 ampères and 66 volts at 350 revolutions. The weight of each set is 7,040 pounds, and the space occupied is 11 feet 2 inches in length, 2 feet 6 inches in width, and 5 feet 3 inches in height. These dynamos work both incandescent and search-lights. The engine is fitted with a governor which can be adjusted while in motion, and may be used as either condensing or non-condensing.

Among the most recent plants of the British navy, are those of the *Benbow*, *Hero*, *Camperdown* and *Howe*. Each of these ships is furnished with three sets of dynamos and engines of the type shown in Fig. 15. Each set consists of a Willans two-cylinder compound engine directly connected with a Siemens HB_{10} compound dynamo, which yields 200 ampères and 80 volts at 425 revolutions. The space occupied by each set is 8 fee 10 inches in length, 2 feet 4½ inches in width, and 6 feet in height. The engines are of the type already described. The bed-plate is so made as to allow the dynamo to set inside of it, and the four bearings of engine and dynamo are all bored in the same line. When necessary to take either dynamo or engine apart for repairs, it is done by lifting the upper parts from the bed-plate, everything being put in place

from above. The total capacity of the three sets for each ship is sixty-five useful electrical horse-power, the largest ship plants probably introduced as yet.

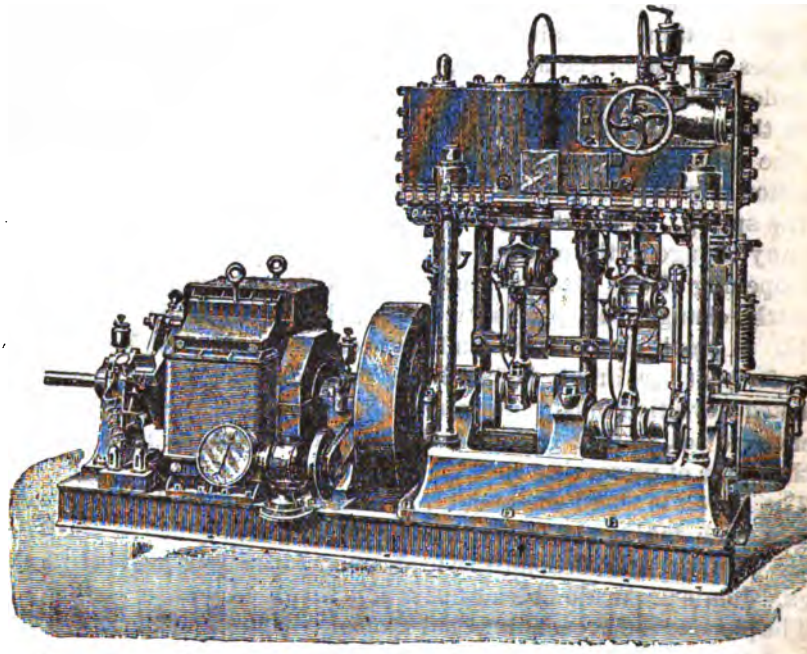

FIG. 14.—Compound Direct-Acting Engine and Dynamo.—Plant of French Iron-Clad *Indomptable.*

The *Archer* and class, have plants each consisting of two sets of dynamos and engines. The engines are two-cylinder Willans, driving Siemens HB_9 dynamos at 425 revolutions. The dynamos yield 100 ampères at 80 volts. Each set of dynamo and engine occupies a space of 7 feet 2 inches, by 1 foot 11½ inches and 4 feet in height. The *Archer* it will be remembered, is of about the same displacement as the *Yorktown.*

A German plant intended for use ashore is shown in Fig. 16. The dynamo is of a type recently introduced there, and consists of a large Gramme armature, having multipolar field magnets inside the ring. This arrangement offers several advantages electrically, such as high periphery speed, with a small number of revolutions, very small weights for output, and ventilation of armature, but it possesses mechanical disadvantages, the armature being overhung. The collector must have a large number of divisions, and the armature requires very careful winding to avoid an unsymmetrical arrangement which causes sparking. As stated, the combination actually figured, is for a shore plant, but if all unnecessary weights were removed from the engine, it would be

Plan

rdown" "

(3 Set

15.

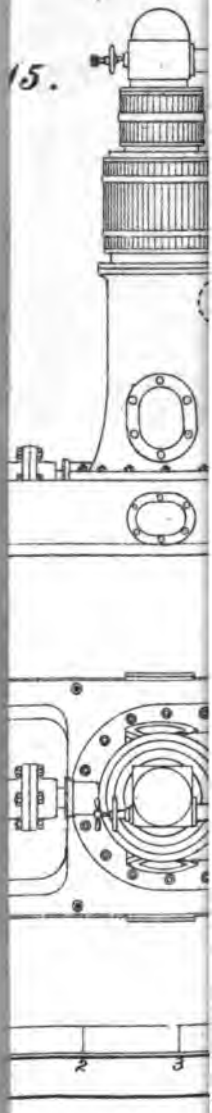

well adapted for ship's use. This dynamo is made by Siemens & Halske, of Berlin.

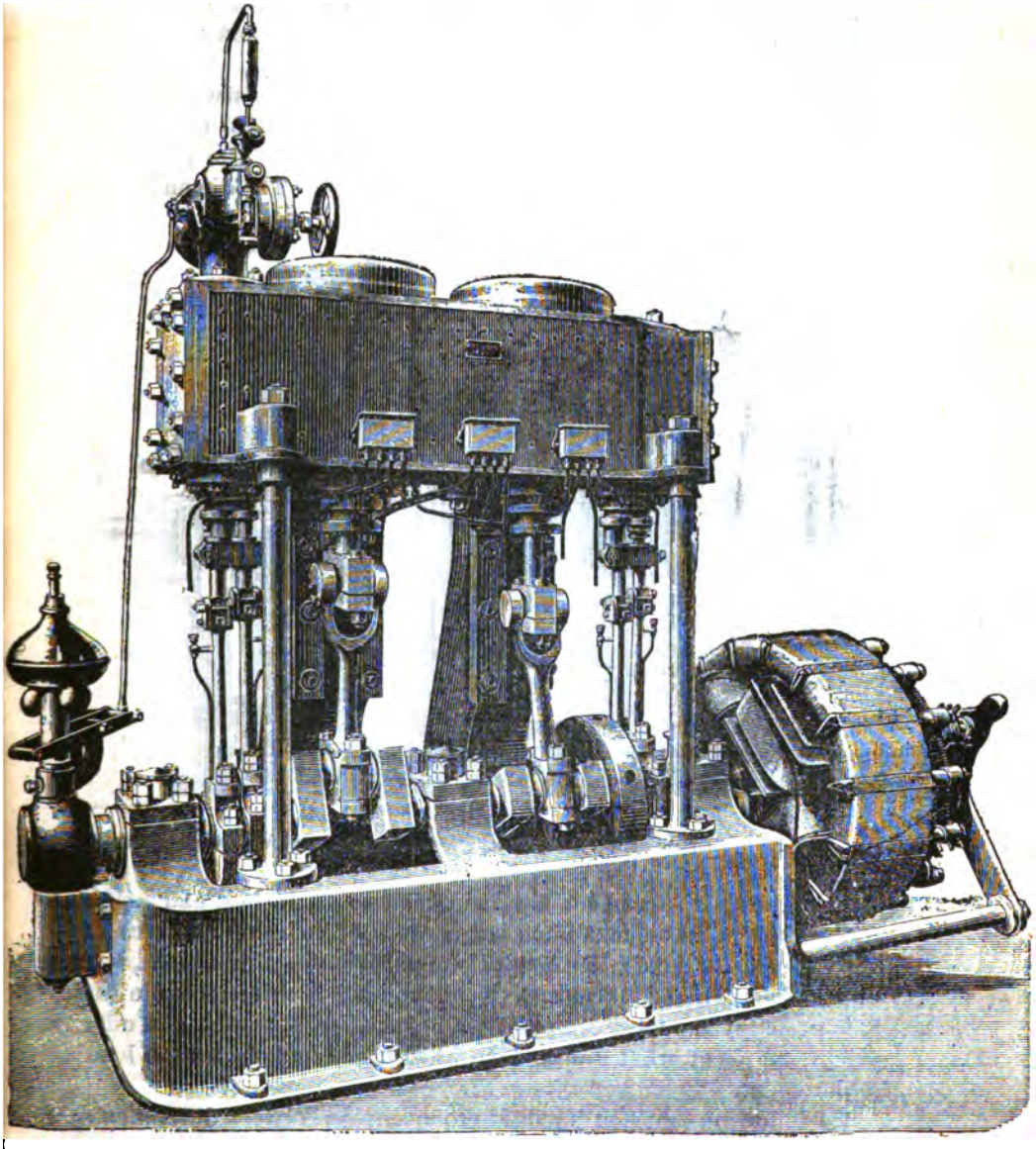

FIG. 16.—Siemens' Ring Dynamo directly connected with Engine.

While, in ordinary cases, economy of working as well as economy of space are to be considered, there are extreme cases, such as torpedo-boats and picket launches, where saving of space is paramount. For such uses the plant must be extremely small. The Clarke, Chapman &

Parsons steam turbine and dynamo, like that at the Torpedo Station, is a specimen of this class. Its extreme dimensions over all are, length 4 feet 5 inches, width 1 foot 3 inches, and height 2 feet 3 inches. Its weight complete is about 400 pounds. With 80 pounds of steam this will easily supply 30 sixteen-candle lamps.

Another torpedo-boat plant is shown in Fig. 17, consisting of a Victoria dynamo and a Brotherhood engine. In order to economize to the utmost only one-half the usual field magnets of the Victoria are used, and one of the dynamo bearings is omitted. The dimensions are,

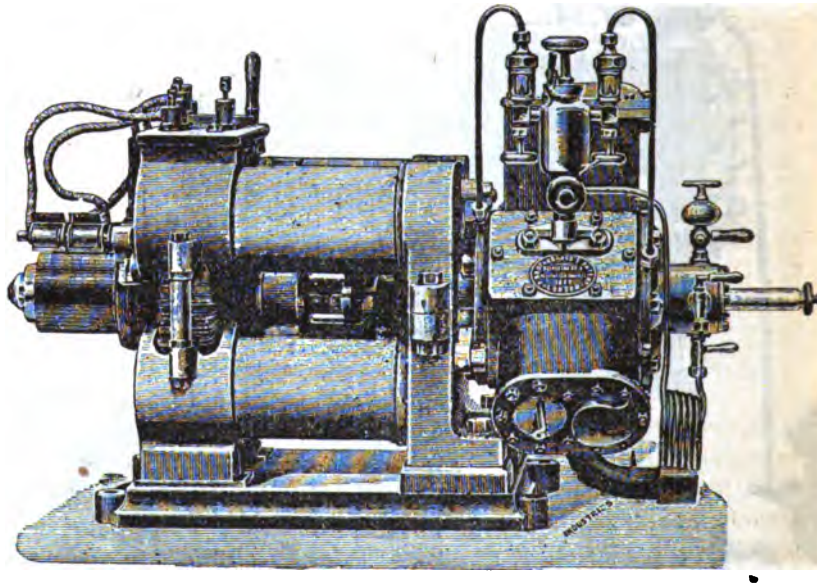

FIG. 17.—Torpedo-boat Plant, Brotherhood Engine, and Victoria Dynamo.

over all, length 2 feet 10 inches, width 1 foot 8½ inches, and height 1 foot 10 inches. The maximum output is said to be 60 ampères at 65 volts, the speed being 750 revolutions per minute. This plant, with a total weight of about 800 pounds, would operate 60 sixteen-candle lamps. It is probably the most compact small plant yet produced, and offers a good example of what can be done when small bulk forms the leading requirement.

The following table may facilitate comparisons between different ship's plants. The amount of floor space occupied by the plant for each sixteen-candle, sixty-five-volt lamp operated, is taken as the test for compactness, and the weight per lamp as that for weight:

Vessel.	Plant.	Connection.	Total weight.	Floor space.	Per 16-candle lamp.	Floor space per 16-candle lamp.
			Pounds.	*Sq. feet.*	*Pounds.*	*Sq. inches.*
Chicago, 2 sets, each.	Edison No. 8 (200 lights), Armington & Sims engine.	Belting	8,200	54	41	34
Boston.....	1 Brush E_8 (150 lights), 1 straight-line engine.	Belting	10,400	108	70	104
Atlanta.....	1 Weston 7 W I (150 lights) 1 Armington & Sims engine.	Belting	6,500	105	43	101
Torpedo station.	1 Weston No. 8 (250 lights), 1 Westinghouse.	Direct; 390 revolutions.	9,300	75	37	43
H. M. S. Howe, 3 sets, each,	1 Siemens H B_{16} (250 lights), 1 Willans engine.	Direct; 425 revolutions.	.....	21	.....	12
French ironclad type Indomptable, 2 sets, each,	1 Gramme (160 lights), 1 vertical compound engine.	Direct; 350 revolutions.	7,040	29	44	26
Italian cruiser Dogali.	1 Parsons dynamo (150 lights), 1 steam turbine.	Direct; 9,000 revolutions.	900	$6\frac{1}{4}$	6	6
Steam yacht Alva.	1 Siemens dynamo (160 lights), 1 Willans engine.	Direct; 450 revolutions.	8,700	27	43	24
Steam yacht Restless.	1 Arnold dynamo (30 lights), 1 vertical engine.	Friction	600	6	20	29
Torpedo station.	1 Parsons dynamo (30 lights), 1 steam turbine.	Direct; 9,000 revolutions.	400	$5\frac{1}{2}$	13	26
	1 Victoria dynamo (60 lights), 1 Brotherhood engine.	Direct; 765 revolutions.	800	$4\frac{7}{10}$	13	11

VOLTAIC ELECTRICITY.

So much space has been occupied in treating of the use of dynamos to supply electrical energy that the other applications must be passed with less attention to detail. Fortunately the gun-cotton torpedo instructions give full descriptions of all electrical apparatus used in ordnance work, so that it is not necessary to dwell upon these points. The use of some modification of the Leclanché cell seems to be universal for torpedo work, on account of its reliability, and its having practically no loss when on open circuits. With good care a service firing battery will last a cruise.

In all steel vessels, arrangements will probably be made for firing the guns by electricity, and when automobile torpedoes are supplied, they should also be so fitted that they may be discharged from the bridge, or from some point, at which the direction of the torpedo tube is indicated. Apparatus of this kind has been fitted to two or three vessels, and is probably satisfactory in its details, although in practice but little used. By a complete electrical firing system the whole offensive energy of the ship is brought under the direct control of the captain, and at close quarters or in smooth water, when the guns could be kept continually on the object, the fire of the ship could be delivered effectively from the bridge. In cases where there is much motion on the vessel, it might be best to trust to the skill of the gun-captains, letting each one fire when his sights are on. The fact that an electric firing system is not always serviceable, is no reason why it should not be introduced.

It should be a part of the equipment, its use being left to the discretion of the commanding officer. Automobile torpedoes can in all probability be operated better from the deck than from the torpedo room.

Thermostats have sometimes been used, especially in the coal-bunkers, but their advantages are not so apparent in a man-of-war, where every part of the vessel is under almost continuous inspection, as in merchant vessels or in houses where inspections are seldom made. As thermostats operate from a change of temperature, a considerable rise must take place, or else there is a constant series of alarms caused by accidental fluctuations. Many other special devices, in themselves of unquestionable utility, such as helm or speed indicators, and engine-room annunciators, have been tried on shipboard with but poor success. Apparatus for marine use should be as simple in construction and as reliable in operation as is possible, and many electrical inventions are unfitted by reason of their complexity or liability to derangement. Electricity is an extremely useful agent, but it is only one of many, and it is as foolish to try to adapt electricity to all kinds of work as it is to make steam, compressed air, or hydraulic pressure a universal motor power. We wish the best, and an inventor who invariably prescribes electricity is in the same category as the old-time physician who knew nothing but calomel. When a new question arises an educated officer would choose his agent from all those under his command, and there are plenty of cases in which electricity will be the best.

SIGNALING.

Night signaling by the electric light naturally presents itself for consideration, and there is no question that the present methods may be improved upon, when all vessels are fitted with electric-light apparatus. Thus far three general methods have been tried. The first of these, requiring the incandescent lamps and operated by the ordinary telegraph code, is fully described in General Information Series No. VI. An arrangement of this kind takes the place at night of the ordinary wig-wag signals.

For signaling at greater distances the search-light may be used. Two methods, both using the two-element code, have been suggested and tried. The first is by flashes. The Mangin projecter is generally furnished with a movable disk, which cuts off all the light from the mirror, and by working this, a signal may be transmitted either by combinations of flashes, in ones and twos, or by spacing the flashes so as to reproduce the ordinary intervals of the telegraphic code. The second method is to move the projecter, so as to cause the beam of light to move from right to left, or *vice versa*, exactly as in wig-wag signaling in daylight. However clear the air may be there is sufficient matter in suspension to render the beam of light visible at considerable distances.

Experiments of this kind were made at the Torpedo Station years ago with complete success. More recently it has been shown that sig-

nals may be exchanged between points which are invisible to each other. At the recent Newcastle exhibition, signals were transmitted by the Morse code between two points 11 miles apart, separated by high land, the beam of light from the projector being thrown into the air at a moderate elevation. An experiment proposed for trial in the summer manœuvres of the North Atlantic squadron of transmitting signals to even greater distance, by throwing the beam of light on the clouds, has been carried out at Singapore by two vessels of the British navy which communicated in this way with partial success over a distance of 60 miles. Although certainty of transmission may not be obtained at such distances, this method of signaling extends the means of communication between ships further than any other.

In the French navy, the ordinary code signals have been transmitted by a series of ten incandescent lamps, arranged on a yard arm and operated by a keyboard on the quarter-deck. This system was used in the manœuvres of 1887. In small vessels, not supplied with the electric lights, a portable arrangement is used, consisting of an alternate-current dynamo worked by hand. The advantage which this system possesses of a prolonged display of the signal, is so great as to strongly recommend it for use, and the details seem simple in arrangement.

The telephone hardly seems to have many important uses on shipboard, where speaking-tubes suffice, and are not subject to derangement. There are one or two applications, however, which appear to be useful. In the English navy telephones are placed permanently in a diver's helmet, one being in front of the mouth, and others at the ears. In this way the diver may talk freely with the men in the boat, and when the telephones worked well, they would remove all necessity for signaling, and would both facilitate the work of the diver and promote his safety. Another purpose for which the telephone recommends itself is in communication with the naval brigade ashore. It would be a simple thing to run a small wire to a station as on the beach, from which communication with the ship could be maintained. Experiments with this end in view have been already initiated.

Much has been said of late of telephoning or telegraphing from ship to ship, and many methods have been suggested. The desirability of communicating in fogs, or at night when lights ought not to be shown, is so great that it is probable that some practicable method will ere long be devised. Two general schemes have been suggested, one being electro-magnetic, and the other mechanical. The idea of the first method is to signal in the coil of an electro-magnet by means of a make-and-break code, every signal being, of course, transmitted by electro-magnetic induction to a distance, where it is to be received in any ordinary telephone. The most extensive experiments of this kind are probably those made by Lieutenant Fiske, U. S. N., aboard the *Atlanta*, in which, proceeding step by step, he finally used the ship as an electro-magnet, winding her with wire through which the current of two Gramme

machines in parellel arcs passed, and using an iron tug wrapped with fine wire, in which telephones were inserted, as a receiver. Although results were obtained which were in themselves encouraging, they seemed to indicate the working impracticability of the scheme. Another method tried by Lieutenant Fiske was, to complete the dynamo circuit through the water, and then to use a receiving wire both ends of which dipped into the water, a telephone being placed in the receiving circuit. Make-and-break signals in the dynamo circuits were received in the telephone, but the results became uncertain at a comparatively short distance. In England, Mr. Preece has transmitted signals almost two miles between telegraph wires, using in one, a current which was broken rapidly and automatically, by a "buzz-transmitter," while Morse signals were given by a key in the same circuit. The receiving telephone gave a continuous musical note, broken by the Morse signals. In this case the current was made and broken 250 times a second, and Mr. Preece gave a formula for determining the distance at which signals could be understood under those conditions

$$X = 1.9016 \sqrt{\frac{C e}{r}}$$

in which, X is the distance in miles; C, the strength of the primary current; e, the length of the face of receiving wire; and r its resistance, including the telephone. The distance at which a signal can be heard depends, of course, on the strength of the primary current, on the resistance of the secondary circuit, and on the rapidity of the changes in the strength of the primary current. Lieutenant Fiske suggests the use of an alternating dynamo, and it is unquestionable that the distance can be thus greatly increased. If experiments show that this method of communication is practicable, an alternating device could be introduced in a branch circuit from the incandescent mains.

Professor Dolbear is said to have telephoned half a mile through water by placing transmitter and receiver in the circuits of two powerful batteries, each of which had one pole to an earth plate overboard, while the other pole was connected to one side of a condenser, the other plate of which was disconnected. The opposite poles of the two batteries must be to earth.

Thus far, the best arrangement seems to be an apparatus for producing sound under water, the sound waves acting on a receiving telephone or microphone. Professor Blake has heard the ringing of a bell under water a mile and a half distant, by using a transmitter consisting of carbon granules moulded into a disk with rubber cement, the transmitter being in series with a battery and receiving telephone. If a large diaphragm is used to receive the sound wave transmitted through the water, a sound, such as Morse signals on a gong or bell, can be readily heard at moderate distances. The difficulty seems at present to lie in producing a receiving apparatus which is sensitive, durable under salt-water, and yet not subject to accidental vibrations from the sea or the motion of the vessel.

SECONDARY BATTERIES.

A commercial development which should be watched with interest, is that of the secondary or storage battery. It is admirably designed, in connection with the electric motor, for the propulsion of submarine boats and torpedo launches. Experiments have shown that a horse-power can be maintained for eight hours, with a total weight of 150 pounds of battery and motor, and much better results are claimed. The great advantages, however, for torpedo launches lie in the noiselessness of working, and in the possession of a clear space in the boat, unincumbered by machinery, for the manipulation of torpedoes. The expense of the secondary battery, and its unknown depreciation may render its early adoption in the service undesirable; but its advantages are evident, and will lead to its use as soon as it shall become an economical and durable article. In several vessels the secondary battery is used as an adjunct to the electric-lighting plant, but its use for this purpose is decidedly uneconomical and can not be recommended.

ELECTRIC MOTORS.

Another point deserving careful study is that of electric motors. Their use is extending very rapidly ashore, and naturally raises the question whether there is a field for them on shipboard. The transmission of energy by electricity possesses two general advantages over any other system, in being more economical when energy is to be transmitted to a distance or when it is to be subdivided into a number of paths. The former has no application on shipboard, where distances are short, but the latter seem to meet many of the conditions for a modern navy.

A good dynamo will place 90 per cent. of the mechanical energy it receives in the form of available electrical energy in its external circuits. If, now, a good motor be placed in this circuit, 90 per cent. of this electrical energy, or about 80 per cent. of the work of the engine, can be obtained as mechanical work. The loss in transmission is 20 per cent., and the cost of dynamo and motor renders such a system uneconomical in comparison with the simple one of placing a steam engine where the work is to be done. If, however, the power is required in twenty places instead of in one, the question becomes radically different, and this is the one inviting our attention.

In the new cruisers one of the first impressions received is that of complexity and confusion arising from the number of small engines scattered over the vessels. Nor is the feeling dispelled by a closer examination, for the ship is found to be a labyrinth of steam, exhaust, and circulating pipes, complex in arrangement, and requiring constant care and attention to keep in order. Joints and valves leak, steam condenses, and water freezes, totally disabling some part of the mechanism. If injuries occur, repairs are difficult and frequently impossible with the

ship's resources, and an important engine may be disabled for months, or until the arrival of the vessel in port. A still more important objection to this complicated system of steam circulation in men-of-war is found in its liability to injury in action, and the danger to the crew which such injury might bring about. A single pipe cut by shot might disable a very important part of the ship's offensive apparatus, and pipes so injured are difficult to repair, and require time which could not be spared. The escape of steam in such a case would inevitably interfere with the fighting of the ship, and might cause loss of life or even a panic in the crew. If, therefore, it is necessary to use so many auxiliary motors, is steam the best vehicle for the transmission of power?

The electric motor is for equal power smaller than almost any steam-engine, is more efficient, involves less waste in transmission, and has small mains, which are therefore less liable to injury and admit of rapid repair of injuries. With the low potential used on shipboard there is, moreover, no danger to the personnel, and a broken main could be stopped, without the delay of turning off the current. Every objection against the indiscriminate use of steam-engines is removed by the use of the electric motor. A motor is, moreover, portable, and power may thus be quickly obtained in any place in the ship where the motor may be fastened down.

On grounds of utility, therefore, the motor appears to possess decided advantages. These appear to exist equally in economy. Small engines are notoriously uneconomical as compared with large ones. Small motors and dynamos are less so. By concentrating the whole auxiliary power of the ship in the dynamo-room, large, economical compound condensing engines may be used in driving high efficiency dynamos, and the power thus obtained distributed through large mains to the motors with very slight loss. The question of economy therefore rests upon the amount of subdivision, and is apparently in favor of the electric motor under just the circumstances in which distribution by steam becomes complex, and the loss due to using a number of uneconomical engines, forms a large total aggregate. The question of economy of coal is one of the most important to be faced, and becomes paramount in a ship, which, without plenty of coal in her bunkers, is a mere helpless steel box, drifting at sea. Is it not advisable to seriously consider the saving and general advantages to be obtained by the high economy of large engines of the best type, and the high efficiency of well designed dynamos and motors, in place of the notorious wastefulness, heat, dirt, and noise of small auxiliary engines?

In order to carry out such a plan, it is only necessary to connect the motors to the incandescent-light mains. It will be necessary to closely analyze the demands for power, and to place in the dynamo-room a sufficient number of dynamos to supply the maximum required to be used at any time. The paramount consideration should be to have a reserve in action, and it is probable that more power will be needed

then, through the use of gun-carriage and other motors and search-lights, than will be saved by the diminished use of incandescent lights. The dynamo-room in this case becomes a central station for light and power, and valuable information may be derived from the experience of central stations ashore. It seems to be settled now in ordinary practice that, in cases where the load varies largely, it is in the long run more economical to use several engines of medium size, throwing in one after the other as the demand increases, rather than to employ one or two large engines which must generally be operated in partial load. It is possible that a simple relation might be established by which the entire plant would consist of four dynamos and engines, one of which would be sufficient to operate the ordinary incandescent lighting under good working conditions.

The objection to such a system is, that although the danger in action is not diffused over the whole ship it is concentrated in one place, and any injury there would cripple the ship. This is merely placing the dynamos in the same category as the engines and boilers, and, like them, the dynamo room must have all protection that can be given it. It should always be below the protective deck, when there is one, and in other cases, below the water-line. The mains should consist of several parts in parallel, connected together by copper wire spans at intervals. Each main becomes then a net-work of conductors, and although this entails greater first cost, it reduces loss in transmission to a negligible quantity and guaranties safety and durability. The distribution should be made as much as possible below the protective deck, branch mains being generally vertical. Every circuit necessary in action should be thoroughly accessible for repairs, while at the same time receiving all possible protection. The highest insulation is of course demanded.

The simplicity of such a system is in marked contrast with that of steam distribution. All incandescent lights, search lights, and motors are connected in parallel, and any one may be put in or out of action by the movement of a single switch. The only precaution that must be taken is that large motors should not be thrown into circuit without notifying the dynamo room, that sufficient power may be available. The men on watch there would, without special orders, start another dynamo whenever the load came near the limits of those in motion, and stop the machines one by one as the load fell, and no probability existed of further demands.

Apart from all advantages of distribution, the electric motor is the most efficient, compact, noiseless and simple vehicle for the transmission of energy that is known. If well made, it requires only ordinary care and attention to be always ready for use. Its principal danger on shipboard is from salt-water, but with proper care, this is small.

Nothing like a complete presentation of so wide a subject, can be given within the limits of a single article, but the foregoing may call attention to some of the necessities of our service, and also to some fields in which experimental work may well be carried on.

VI.

MARINE BOILERS.

By Assistant Engineer R. S. GRIFFIN, U. S. N.

While so much progress has been made in recent years in the perfection of the marine engine as a steam user, very little advance has been made in the boilers as ordinarily used in naval vessels beyond that consequent upon the use of higher pressure, the substitution of steel for iron, and the introduction of corrugated furnaces. From the economy resulting from the use of triple and quadruple-expansion engines, the same power is now got from a much smaller boiler than with compound engines, or retaining the same size of boiler a resulting increase of power is obtained.

For large ships the type almost universally adopted is the cylindrical horizontal return-tubular, either single or double ended. Of our ships now building the *Baltimore*, *Philadelphia*, *Newark*, and *San Francisco* have double-ended boilers, those of the *Baltimore* and *Philadelphia* having eight furnaces, and those of the *Newark* and *San Francisco*, six; the *Charleston*, *Yorktown*, and *Petrel* have boilers of the low, straight-through type, all having three furnaces, except those of the *Petrel*, which have two. In the *Baltimore's* boilers there is a back connection for each pair of adjacent furnaces; in those of the *Philadelphia* and *Newark* each furnace at one end has a back connection in common with the furnace opposite it; in those of the *San Francisco* there is a back connection for each furnace.

All the English belted cruisers have four double-ended boilers with three furnaces at each end. In the *Orlando*, *Undaunted*, *Narcissus*, and *Immortalité*, the back connections are arranged similarly to those of the *Philadelphia* and *Newark;* but in the *Australia* and *Galatea* there is only one back connection in each boiler. These methods of construction have the advantage of being lighter and cheaper than that of having a back connection for each furnace, and for natural-draft working may do well enough; but for continuous steaming under forced draft it has many disadvantages. So small a casualty as the breakdown of a fan in one of the fire rooms would necessitate the working of both the boilers on that side of the ship under natural draft. It is urged against

the fitting of separate back connections that it is difficult to clean the water spaces between them, but as sea-water need not be fed into the boilers, this objection has no weight.

All boilers of good design are now fitted with hydrokineters, for circulating the water in the boilers while getting up steam.

Feed-water heaters are again coming into use in steamers of the merchant service, and the published reports from them are highly eulogistic of their efficiency. When used in combination with evaporators, the objection to them on account of loss of efficiency due to salting up will disappear. The English belted cruiser *Galatea* has a feed heater.

An important point in the design of boilers worked with forced draft, and one which does not appear to have received the attention it deserves, is the size of the furnaces. Frequently the attempt is made to get as many furnaces as possible, the diameter being looked upon as of secondary importance, as with one more furnace in the boiler the weight is reduced and the heating surface slightly increased. Of the advantage to be derived from the use of larger furnaces, Mr. W. G. Spence, in a paper which will be referred to in the subject of forced draft, says:

The question of diffusion also points to the very real advantage to be gained by large diameter furnaces and good combustion-chamber capacity, as in these more space and time are allowed for the proper mixing up of the atoms of oxygen and coal gas; also, a small diameter furnace has the disadvantage that the flame coming into direct contact (or as near direct contact as flame can be made to assume) with the metal of the furnace, having water at a comparatively low temperature on the opposite side, becomes cooled, and smoke is consequently produced. In actual marine boilers it is a practical impossibility to get as great a diameter of furnace, or anything like as much combustion-chamber capacity as would be deemed necessary if only the question of perfect combu stion had to be considered, as for this purpose the flame ought never to reach the metal at all; but due attention being paid to actual practical requirements, the larger the diameter of the furnace and the greater the combustion-chamber capacity the better.

Before the introd uction of forced-draft, when boilers were almost universally built with a ratio of heating to grate surface of about 25 to 1, it was the custom to refer the boiler-power to the grate surface, and speak of it as so many horse-power per square foot of grate; but with forced draft came ratios of 30, 35, 40, and even higher, and it is in such cases obviously incorrect to refer the power to the grate, as it is evident that in the same boiler a much larger quantity of coal can be burned on a short grate with forced draft than could be burned on the original grate with natural draft, and thus the "I. H. P. per square foot of grate" would make the boiler-power appear very much larger than it really is. It is evident that by making the grate short enough the actual power in the two cases could be made equal, whereas the apparent power due to the expression "I. H. P. per square foot of grate" would seem much greater with forced than with natural draft. By referring the power to the heating surface, the real measure of the heat transmitted, this anomaly will not exist. Grate surface is merely the standard of measure of the coal burned.

The British Admiralty has recently taken an important step in the matter of boiler tests in relation to the working pressure. It is the practice of Lloyd's and of the Board of Trade, and until quite recently was also the Admiralty practice, to test boilers to twice the working pressure. This rule is a relic of the days of low pressures, but has been rigorously enforced by the associations above mentioned, and has resulted in the use of such thick shell-plates in large boilers working at pressures of 150 to 160 pounds that further increase of pressure is practically barred by the enforced test of double the working pressure.

In March of this year, Mr. Sennett, Engineer-in-Chief of the British Admiralty, read a paper on this subject before the Institution of Naval Architects, in which he said that the present rule of the Admiralty is, for boiler-shells, to add 90 pounds to the working pressure, and to make the plates of such a thickness that the stress at this pressure shall not exceed four-ninths of the ultimate strength of the metal, so as to keep well within the elastic limit; in other words, the factor of safety at the test pressure is $2\frac{1}{4}$, instead of 4 to 5 at the working pressure, as was formerly the case. But the working pressure, instead of being one-half the test pressure, is now fixed at 90 pounds below it. For the other portions of the boiler the same factor of safety as formerly used is retained, so as to allow ample metal for corrosion. It was pointed out that with the double-pressure test, and a factor of only 4, which is that allowed for very thick plates, the stress produced would be equal to one-half the ultimate strength of the shell, and that this would in most cases be very near the elastic limit.

Mr. Sennett shows the effect of the new rule in the case of the boilers of the *Medea* and the other vessels of her class. These boilers are about 12 feet in diameter, and are intended to work at 155 pounds pressure. The water-test pressure will accordingly be 245 pounds, and the thickness of shell, with the factor of safety of $2\frac{1}{4}$ at this pressure, will be $\frac{13}{32}$ inch. According to Lloyd's rules the thickness would be $1\frac{5}{32}$, or the working pressure of the boilers as constructed would be only 123 pounds. The thickness of shell required by Lloyd's for 155 pounds would, by the Admiralty rule, be sufficient for a working pressure of 220 pounds.

The discussion which followed the reading of the paper was very interesting, and while there was a marked difference of opinion as to the wisdom of the departure, there was almost unanimity, amongst those speakers who gave a decided opinion, that the double-pressure test is too severe, and the weight of opinion was unmistakably in favor of the change. Probably the most forcible arguments against the application of the rule to the boilers of merchant ships were that those boilers do not, as a rule, receive the same care that naval boilers do, and that there would consequently be more corrosion; that the ship owners would rather err on the side of safety, and that the increased cost due to the heavier shell-plates (the saving in the case of the *Medea* was only 14 tons) would be more than counterbalanced by increased life of boiler,

Plate 1.

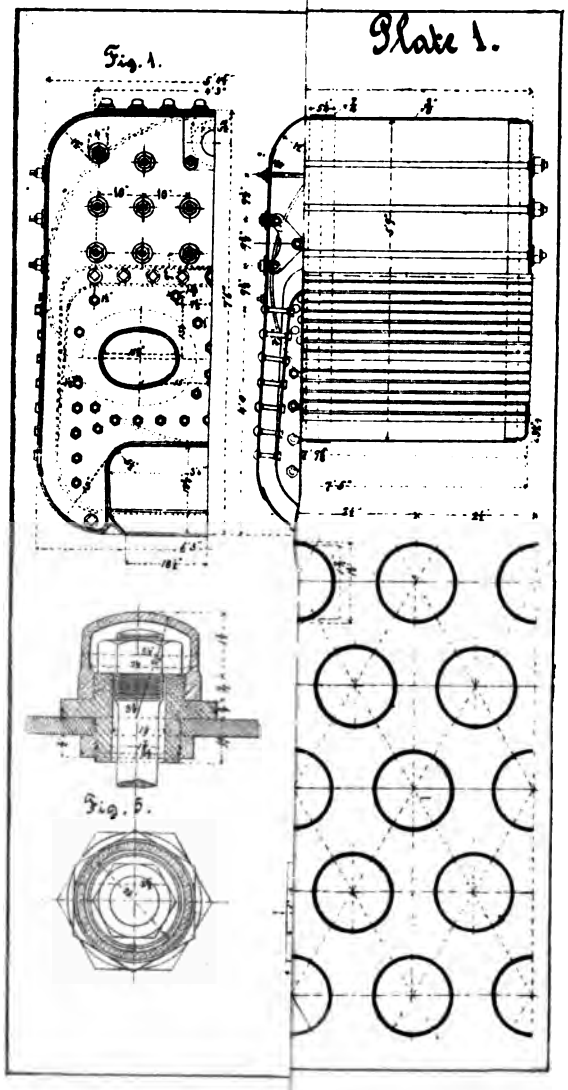

and that the ship would not have to be laid up so often for new boilers. It was urged against the latter argument that the shells always outlast the other portions of the boiler, and that the rule applies only to the shell-plates.

It has long been the practice of the Bureau of Steam Engineering to test boilers to a pressure 50 per cent. greater than the working pressure. The test is a hot-water one, the boilers being filled quite full and gradually heated, the pressure being obtained by the expansion of the water.

The greatest improvement that has been made in marine boilers is in the adaptation of the modified locomotive type to vessels of the "torpedo-catcher" class. The high speed stipulated in contracts for these vessels required very high power on a small weight of machinery, and as the locomotive boiler is lighter, and contains less water for the same power than any other, except the water-tubular boilers of the sectional variety, its introduction was a necessity. Its earlier use, except in torpedo-boats, where only one boiler was used to supply steam to the same engine, was not attended with success; and it was only after repeated trials and many modifications that its working in groups was satisfactorily accomplished.

The boiler shown on Plate 1 is that adopted for the Italian torpedo vessels *Tripoli* and *Folgore*, and may serve as an illustration of one of the earliest types of this boiler. As will be seen, its principal peculiarity and the point in which it differs from the ordinary locomotive boiler as used in torpedo-boats lies in the partial water-bottom which extends beneath the ash-pit, whereby the circulation is improved, and the great trouble formerly experienced from too rapid evaporation and deficient supply of water to the sides of the fire-box in great measure obviated. It has given fairly good results, but does not appear to have been entirely satisfactory as regards water circulation. The *Tripoli* has six of them, and the *Folgore* four, each designed to furnish steam at 130 pounds pressure, to compound engines, for 700 I. H. P. In a paper read before the meeting of the Institution of Naval Architects last summer, by Mr. F. C. Marshall, whose firm designed the machinery, it is stated that the *Tripoli* obtained a speed of 21 knots on trial without running the engines at full power, on account of the excessive vibration of the vessel when the engines were run as high as 360 revolutions, and that they were not run beyond 330. The horse-power for this speed was not given, but it is ascertained from other sources to be 3,600, so that the power actually got from each boiler was 600, or 1.86 square feet of heating surface per I. H. P. [An evaporative test of this boiler will be found on pages 102 and 103 of General Information Series, No. VI. The grate surface is there given as 26¼ square feet.]

The principal data of the boiler are:

Grate surface	square feet..	28
Heating surface:		
Tubes	square feet..	1004
Fire-box	do....	112
Total	do....	1116
Calorimeter of tubes	do....	3.7
Water surface	do....	92
Steam space	cubic feet..	182

The grate extends about two-thirds the length of the fire-box, and between the bridge-wall and the tube-sheet there is a large combustion chamber, which not only facilitates combustion but prevents the direct impact of the highly-heated gasses on the tube-sheet. With the exception of the tubes, which are of wrought iron, the boiler is constructed entirely of Siemens–Martin steel, having a tensile strength of from 26 to 30 tons per square inch. The butt-joints are double-riveted, the longitudinal seams of cylindrical portion treble-riveted, and all other seams single-riveted, the rivets in all cases being three-quarters of an inch in diameter.

All stays and stay-bolts, with the exception of the row of vertical stays at either end of the fire-box, and of the extreme vertical rows of stay-bolts, are screwed into both sheets which they brace. In the case of the exceptions mentioned, the method of fastening the ends on outside of boiler is shown in Fig. 5, so that considerable movement of the fire-box, due to expansion and contraction, can take place without bringing an undue strain on the opposite sheets.

The tubes are $1\frac{3}{4}$ inches outside diameter, No. 12 B. W. G. thick, and are expanded in the tube-sheets. There are no stay tubes or rods.

On the front of the boiler there are eleven two-inch holes for examination and cleaning, nine of them being above the crown of fire-box, and the other two at lower part of water-legs.

The drawings are self-explanatory, so that it is only necessary to give the thickness of the different sheets, which are as follows:

	Inch.
Cylindrical shell	$\frac{5}{8}$
Crown, front, and sides, and front of fire-box	$\frac{1}{2}$
Butt-straps	$\frac{7}{16}$
Tube-sheets	$\frac{5}{8}$
Other plates	$\frac{1}{2}$

The weight of boiler, including water, is given in Mr. Marshall's paper as 15.625 tons, or $58\frac{1}{3}$ pounds per I. H. P., taking 600 as the I. H. P. of the boiler.

While the apparent results obtained from this boiler have been so satisfactory, the fact that it has been abandoned for one of proportionately greater weight would point to a defect in circulation. The boiler referred to, and that which appears to be one of the latest developments

Plate 2.

2.

Fig. 4.

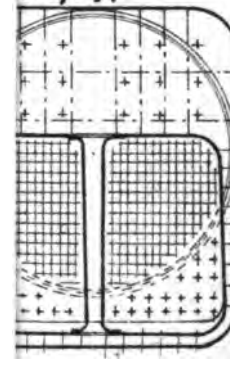

Fig. 6.

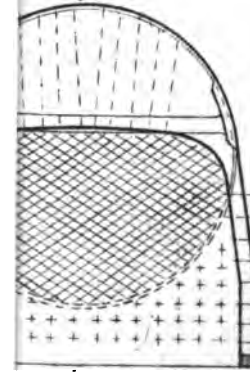

of this type, is shown in Figs. 1 and 2, Plate 2. It differs from the boiler of the *Tripoli* in having the water bottom carried beneath the whole of the ash-pit, and in having a continuous water bottom uninterrupted by vertical spaces. The other points of difference are quite apparent and need no comment.

The Italian torpedo cruisers *Montebello* and *Monzambano* are each fitted with six boilers of this type, each of which is designed to furnish steam at 160 pounds pressure to triple-expansion engines for 700 horse-power. The weight of the boiler, including water, as given by Mr. Marshall, is 15.3 tons, or 49 pounds per estimated I. H. P. These vessels have not yet been tried.

The fire and ash-pit doors are balanced and open inwards, so that in case of an accident, such as the bursting of a tube, the pressure in the furnace will keep them tightly closed and prevent a rush of steam into the fire-room. The grate-bars are arranged transversely, as with the Ferrando system of forced draft, are about three-eighths of an inch thick on top, and have spaces between them of about a quarter of an inch at bottom and an eighth at top. The grate and heating surfaces are respectively 24.3 and 1,123 square feet, being an estimate of 1.6 square feet of heating surface per I. H. P.

The views of this boiler, as well as those of the others shown on this plate, are intended merely as outlines of the general form, to show the method of construction and the bracing, and are not supposed to be to scale, though they are very nearly so.

The boiler of the English torpedo vessel *Rattlesnake* is shown in Figs. 3 and 4, Plate 2. The diameter of the barrel is 5 feet 10 inches, and the length of the boiler 16 feet 6 inches. It has a complete water bottom under the ash-pit, and has, besides, three flat-shaped vertical water tubes occupying the central longitudinal portion of the fire box, practically dividing it into two furnaces. These tubes are 13¼ by 3 inches at the bottom, and are enlarged to 20½ by 4¾ at the top. This method of construction obviously adds to the weight of the boiler, but this objection appears to be more than counterbalanced by the improved circulation. The *Rattlesnake* has four of these boilers, having a grate surface of 126 square feet, and a total heating surface of 5,000, 4,085 of which are in the tubes, which are 1¾ inches in diameter and 7 feet 9½ inches long. On her official trial last year the mean I. H. P. maintained for three hours, with a steam pressure of 135 pounds, was 2,740, the maximum being 2,802, with air pressures respectively of 2.39 and 2.5 inches of water. This performance is equivalent to 1.825 square feet of heating surface per I. H. P. for the mean, and 1.784 for the maximum.

These boilers have probably been worked with forced draft more than any other boilers in the English navy, and are reported to have given little trouble. Some trouble was at first experienced with the grate-bars, which burned out in a short time when under forced draft; but

this difficulty has been met by fitting water-pans in the ash-pit, a similar provision being likewise made in the boilers of later vessels. On some measured mile trials, made last year for the information of the Construction Department of the Admiralty, fires had to be hauled several times on account of foaming of the boilers, but this was at very high speeds and the boilers were probably forced beyond their capacity.

Like the others described, this boiler is constructed entirely of steel, the tensile strength of which varies from 26 to 30 tons per square inch.

The bracing of the vertical water-tubes is omitted in Figs. 3 and 4 for the sake of clearness.

Besides the vessels of this class already mentioned as having this general type of boiler, the vessels of the *Bombe* class in the French navy, the *Destructor* in the Spanish, and the *Iljin* in the Russian are fitted with them. The boilers of the latter vessel are quite similar to those of the *Tripoli*, with the exception of the material of the fire-boxes, which is copper, that metal having been specified by the Russian Admiralty. The *Bombe* class originally had wrought-iron fire-boxes, but they gave so much trouble that copper was substituted.

The following is a comparison of this type of boiler as fitted in the vessels named. All except the *Tripoli* have triple-expansion engines:

Name of vessel.	I. H. P.	Square feet of heating surface.	
		Total.	Per I. H. P.
Tripoli	3,600	6,696	1.860
Montebello	*4,200	6,740	1.605
Rattlesnake	2,802	5,000	1.784
Iljin	3,550	7,746	2.182
Destructor	3,829	5,920	1.546

* Estimate.

TORPEDO-BOAT BOILERS.

The type of boiler usually adopted in torpedo-boats is the locomotive, and differs from those previously described in having no water bottom beneath the ash-pit. There is little difference in general form and method of construction between the boilers of the prominent torpedo-boat builders. Yarrow formerly built his boilers with a "drop" in the crown of the fire-box like that in the *Tripoli's* boiler, but this method of construction has been discontinued in the boilers recently constructed for large boats.

The following are the principal data of one of his boilers for a 100-foot boat:

Length over all	feet	15¾
Diameter of barrel	do	4¾
Width of boiler:		
Top	do	5
Bottom	do	6

Length over tube sheets	feet	9¼
Length of grate	do	5
Grate surface	square feet	25
Heating surface:		
Tubes	do	933.3
Fire-box	do	82.7
Total	do	1,016.0
Area through tubes	do	3.377
Area through ferrules	do	2.497
Area through smoke-pipe	do	3.533
Tubes:		
Number		195
Outside diameter	inches	2
Spacing	do	2¾

The shell is of steel, seven-sixteenths to one-half inch thick, the back head of wrought-iron, the fire-box of copper, and the tubes of solid drawn brass, No. 12 B. W. G. at fire-box end and No. 14 at smoke-box end.

The row of crown stays next the flange of tube sheet is arranged exactly like those of the *Tripoli's* boiler, Fig. 5, Plate 1. The crown stays have large heads upon the fire-box end solid with the stay; there is a screw thread under the head and another at the opposite end, the stay being turned down between the threads. They are screwed up hard from the inside of fire-box, and large square nuts screwed on the ends projecting outside of the boiler. It is claimed for this method of fitting the stays over that of riveted ones that it is not only stronger, but there is not as much probability of the stays pulling through and the crown coming down in case of overheating, as happened to several Thornycroft boats during a torpedo-boat race last summer.

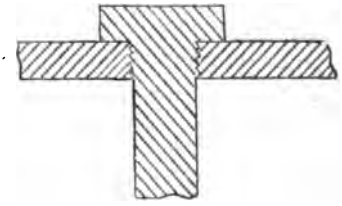

The copper plates which form the lower part of the fire-box are flanged outwards, where they meet the outside sheets, in order to give as much elasticity as possible. The flanges of the tube sheet and the portion beyond the tubes are thinned down for the same purpose. The sides of the fire-box are stayed by seven-eighths inch copper bolts spaced 3¾ inches apart.

The "drop" in the crown of fire-box is about 5 inches, and the width of water space on sides 3 inches.

The weight of this boiler, including water, is about 11 tons, and the I. H. P. developed on the usual short trial trips of this class of boats about 650, which would be about 37.9 pounds of boiler per I. H. P.

The ash-pit of the Yarrow boiler is closed air-tight, but the furnace is fired from a closed stoke-hold. The air which is forced into the stoke-hold passes through non-return valves in the bulk-head across the front

of the boiler, along the upper half of boiler (the space included by bulk-heads at either end being divided horizontally), then down around heating tubes, and returns along the under side of boiler to the ash-pit. By this arrangement the air for combustion is heated, and at the same time any escape of steam and water due to the bursting of a tube or similar cause, instead of rushing into the stoke-hold, goes into this space, closes the non-return valves on bulk-head, and escapes on deck through a suitably weighted valve.

The Spanish torpedo-boats *Azor* and *Halcon*, built by Yarrow, are each supplied with one locomotive boiler, which furnishes steam to a triple-expansion engine working up to a power variously stated to be from 1,200 to 1,550. The heating surface is 2,100 square feet, and the steam-pressure 160 pounds.

Until quite recently the boiler adopted by Thornycroft was almost identical in type with that of Yarrow. It differed in having no "drop" in crown of fire-box, and in the method of staying the crown. The stays were screwed through both the inner and outer fire-box plates, and had their ends riveted over cold, the general form being as shown. The row next the tube sheet was fastened to outer shell with a shackle joint. The boilers of his first-class boats (125 feet long) for the English Government have 204 crown stays, 17 transverse rows of 12 stays each. Wrought-iron is used for fire-boxes and tubes, and steel for the shell. These boilers are all fitted with an apparatus for preventing an in-rush of steam to fire-room in case of the bursting of a tube or other sudden leakage of steam into the fire-box. It consists of several flaps in the front of ash-pit, so arranged as to allow the air to enter freely to under side of grate, but which will close with an increase of pressure in ashpit over that in fire-room. To prevent an accumulation of pressure in fire-box, flaps are fitted on the side of ash-pit communicating with a passage along the outside of boiler to the deck, where it is closed by a cover fastened by means of a spring-catch, the whole arranged so that an increase of pressure in fire-box beyond a certain point will force open the flaps and cover and allow the steam to escape into the atmosphere. The fire-door is closed by a strong catch so that steam can not enter the fire-room from the fire-box.

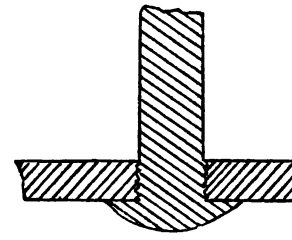

The Thornycroft boiler, as now constructed, is a water tubular boiler, the general type of which is represented on Plate 3. It consists essentially of a horizontal drum or separator at the top, placed longitudinally over the center of the grate; two smaller horizontal cylinders on either side of the grate, a number of steam-generating tubes connecting the upper part of the circumference of the smaller cylinders

Fig. 1.

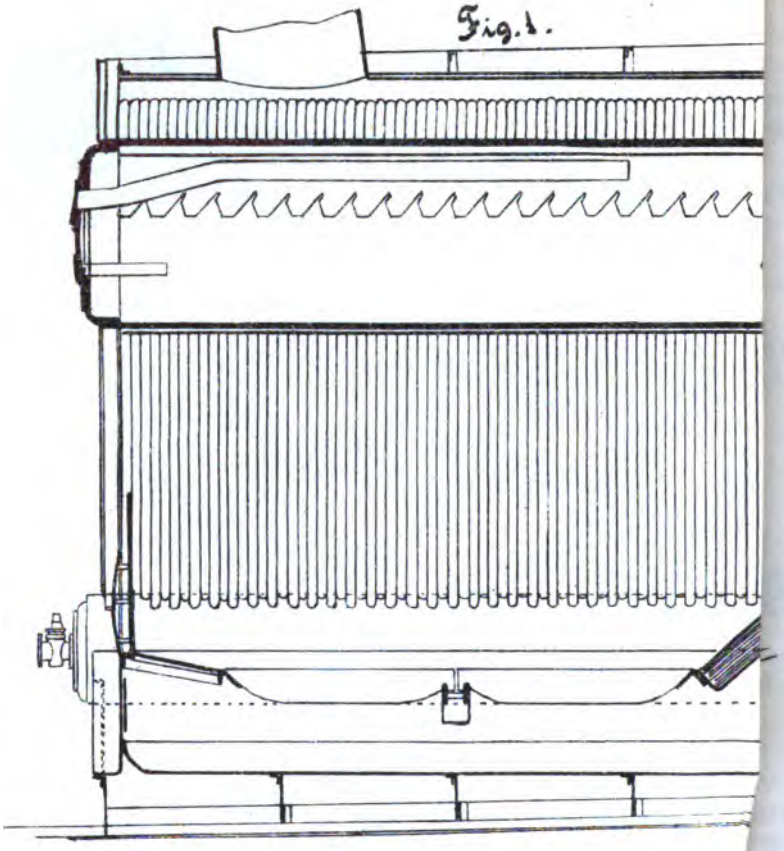

Fig. 4.

Fig. 5.

Fig. 6.

with that of the separator, and of two down-cast pipes outside of furnace, connecting the separator with the wing cylinders, these pipes being for the sole purpose of supplying water to the wing cylinders.

The feed water enters the separator, passes through the down-casts to the wing cylinders, thence through the generating tubes to the steam drum, the upper part of which it enters as steam, so that the steam is disengaged without disturbing the water-level, which is generally carried a little below the axis of the separator. In order that the functioning of the separator may not be disturbed, it is necessary to protect it from the intense heat of the furnace, and this is done by fitting its under side with an asbestos baffle, and so curving the generating tubes that they form an arch over the furnace beneath the separator. The greater number of the generating tubes are arranged as shown in continuous full lines in Fig. 3, those in full lines in Fig. 2, and in partially dotted lines in Fig. 3, being only the groups at each end of the boiler, which are so curved as to shut in as much of the front and back of the furnace as possible for the purpose of protecting the ends of the casing. All of the tubes of the two inner rows touch each other and form a continuous arch over the furnace. The two outer rows also touch so as to form an approximately smoke-tight flue. The tubes of the intervening rows follow the general course of the flue, but do not touch, the gases circulating about them. In order to secure contact between the several tubes of the inner and outer rows, the holes for them are spaced zigzag at a distance apart equal to the diameter of the tubes. These tubes are then bent just a few inches above the wing cylinders, so that they run side by side in close contact until within a few inches of the separator, when they are again bent apart so as to enter the zig-zag row of holes in the upper part of the separator. Through the spaces near the wing-cylinders left between the tubes of the inner row just described, the gases pass into the flue formed by the inner and outer rows, around the intermediate ones, pass out through the corresponding spaces at the upper part where the tubes enter the separator and on to the smoke pipe.

For the separation of the steam and water a semi-circular baffle-plate is placed inside the separator at its upper part, and upon this plate the steam and its contained water is discharged from the generating tubes. The form of this plate is shown in Figs. 4, 5, and 6. The form is the result of a number of experiments, and is found to work admirably in practice, it being stated that the separation is complete. Its construction will be readily understood from Figs. 5 and 6. A triangular piece is first cut out, and then the cut continued, as shown in Fig. 6. The edges of the notches are then bent so as to project at right angles to the rest of the plate. The steam-pipe is placed just beneath the upper part of this baffle.

The spaces about the furnace not necessary for the passage of gases are closed with fire-clay or asbestos, and the boiler casing is lined with sheet asbestos.

The wing cylinders are protected from the direct heat of the furnace by the fire-bricks which form the sides of the grate.

The most successful application of this boiler has been in the Spanish torpedo-boat *Ariete*, built last year. The boiler shown on the Plate differs from those put in the *Ariete* in that the separator and wing cylinders project through the casing at the front, and that the down-casts are straight pipes placed at the front of the boiler in the fire-room, being, of course, covered with non-conducting material to prevent excessive radiation. The diameter of the wing cylinders of the *Ariete's* boilers is about 13 inches.

As far as circulation is concerned, this boiler seems to meet all the requirements of a tubulous boiler. As regards durability, it has not been long enough in use to speak with any degree of certainty, but the builders claim that the perfect circulation and great elasticity render it almost free from the ordinary ills to which torpedo-boat boilers, and especially coil boilers, are liable. Should a tube give out, it might be plugged from the inside of the drums, but in that case the boiler would have to be cold. To replace one of the tubes of the inside rows, all of those standing in the way would have to be cut out and replaced. It remains to be seen how the boiler will stand hard firing with forced draft, and how much its efficiency will be impaired by accumulation of soot, and whether repairs and cleaning can be done with reasonable facility.

The launch *Peace*, belonging to the African Missionary Society, is the only boat fitted with one of these boilers that has done much steaming. She has already steamed upward of 6,000 miles, and, so far as can be ascertained, has had no trouble with her boiler. It is also in use on four English torpedo-boats, one of which is kept in constant use, with a view to testing its practical, every-day working. Two boats built last year for the Danish Government also have these boilers, and there is one now under construction (the *Coureur*) for the French Government which will be fitted with them.

The *Ariete* has two of these boilers which, on measured-mile trials, furnished steam at 152 pounds pressure to twin-screw, compound engines, for about 1,550 horse-power, the pressure in receivers being 48.5 and 46.1 pounds, vacuum 26 and 25.8 inches, and revolutions 392 and 395.5. On the two hours' run, the boiler pressure was 139, receivers 42.25 and 40.5, vacuum 26 and 25.25, and revolutions 372 and 377.2. The I. H. P. on the latter trial, computed from the revolutions, would be 1,335, but owing to the difference in the relative conditions of trial, it was probably more.

The boilers built by Schichau are similar in general form to Yarrow's, the principal points of difference being in the method of bracing and in the materials used in construction. Steel is used throughout, not only for the shell and fire-box, but also for the tubes, which are screwed into

the tube sheet at fire-box end and expanded at the smoke-box end. An important point in the construction of the boilers is that there are no longitudinal braces, so that a man can get inside and examine it. The boiler shown in Figs. 5 and 6, Plate 2, though merely given as a type of recent torpedo-boat boiler, will serve to illustrate this point.

The forced draft used with these boilers is on the closed ash-pit system, and is described on page 113 of General Information Series, No. VI.

The following comprise the principal data of the boiler for the 129-foot boat built by Schichau for the Italian Government:

Extreme length	feet	15¼
Tubes:		
Length	feet	8¼
Number		360
Outside diameter	inches	2.04
Inside diameter	do	1.81
Grate surface	square feet	41.3
Heating surface:		
Tubes	do	1,496
Fire-box	do	301
Total		1,797
Water space	cubic feet	130.6
Steam pressure	pounds	175

This boiler has small hand-holes above the crown of fire-box and at the ends, for the purpose of facilitating cleaning.

On the official measured mile trial this boiler, working with an air pressure of 3½ inches of water in ash-pit, furnished steam to a triple-expansion engine which developed 944 horse power, with a piston speed of 966 feet per minute.

The Russian twin-screw torpedo-boat *Wiborg* has two locomotive boilers 17 feet long and 5 feet 3 inches in diameter, working at a pressure of 130 pounds. The grate surface of both boilers is 56 square feet, and the horse-power developed on trial ranged from 1,303 to 1,405, but from the recent performances of this boat it appears that she has not maintained anything like this power.

THE BELLEVILLE BOILER.

The only boilers of the sectional water-tubular type which have thus far been successfully used in large ships are the Belleville, which have been in use in ships of the French navy since 1879, and which are now fitted on board the Russian iron-clad *Minin*, of 6,000 horse power, and which are being supplied to the French cruiser *Alger*, of 8,000 horse power.

A general description of this boiler was given on pages 115 and 116 of General Information Series, No. IV, and the cuts on Plate 4 are in-

tended to supplement that description. Figs. 1 and 2 represent the combined separator and feed water collector and purifier, and Figs. 3 and 4 the automatic feed regulator, which constitute the chief peculiarities of the boiler.

The separator consists of a horizontal cylinder running across the front of the boiler above the tubes, having a diaphragm, *B*, running horizontally across the lower portion and bent concentrically with the shell of the separator for about one-half of its circumference, forming, with the cylindrical portion of the separator, an annular space for the passage of steam and water. The steam, with its contained water, rises in the tubes *T* and passes through the pipes *A* into the bottom of the separator; there it meets the horizontal portion of the diaphragm and flows through the annular space, where, by the action of centrifugal force, the water is separated from the steam and falls to the bottom of the separator, the steam going into the dry-pipe *C*, and thence to the main steam-pipe.

The feed water enters the separator by the pipe *F*, at the right hand end, flows along the upper side of the diaphragm to the other end of the separator, and through the pipe *D* to the *déjecteur* or mud-drum. Being in contact with the steam, and mixing with the water brought over with it, the temperature of the feed water is rapidly raised, and the salts and other impurities held in solution or suspension are liberated and carried along with the feed to the mud-drum, where they are deposited.

The automatic feed regulator, Fig. 3, consists of a water column *N*, connected with the tubes or elements of the boiler, having inside it a float *H*, to which is attached a rod which operates the lever *P*, which in turn actuates the lever *L*, to one end of which is connected the stem of the feed-valve *I*, the other end being balanced by a spring *S* and weights *W*. It will be readily understood from the figure that the spring and weights having been once regulated for a certain height of water, any deviation from this level will cause a corresponding motion of the float, levers, and feed-valve. The feed water from the pump enters by the pipe *E*, and goes to the separator through the pipe *F*. Fig. 4 is an enlarged view of the feed-valve, etc.

On board the *Voltigeur* these regulators are said to work well, but require careful watching, as they sometimes stick, and have to be frequently worked by hand during a run.

The instructions for the care of these boilers provide for the introduction of carbonate of lime with the feed water, the quantity being regulated by the amount of sea-water used to make up losses, in the proportion of 1 pound of lime to 100 gallons of water. A corresponding quantity is put in when they are run up from the sea. When not in use, the boilers should be filled with fresh water.

The lower rows of tubes are, on examination, usually found covered with a scale from $\frac{1}{32}$ to $\frac{1}{16}$ inch thick, the upper rows being compara-

Plate 4.

Fig. 3.

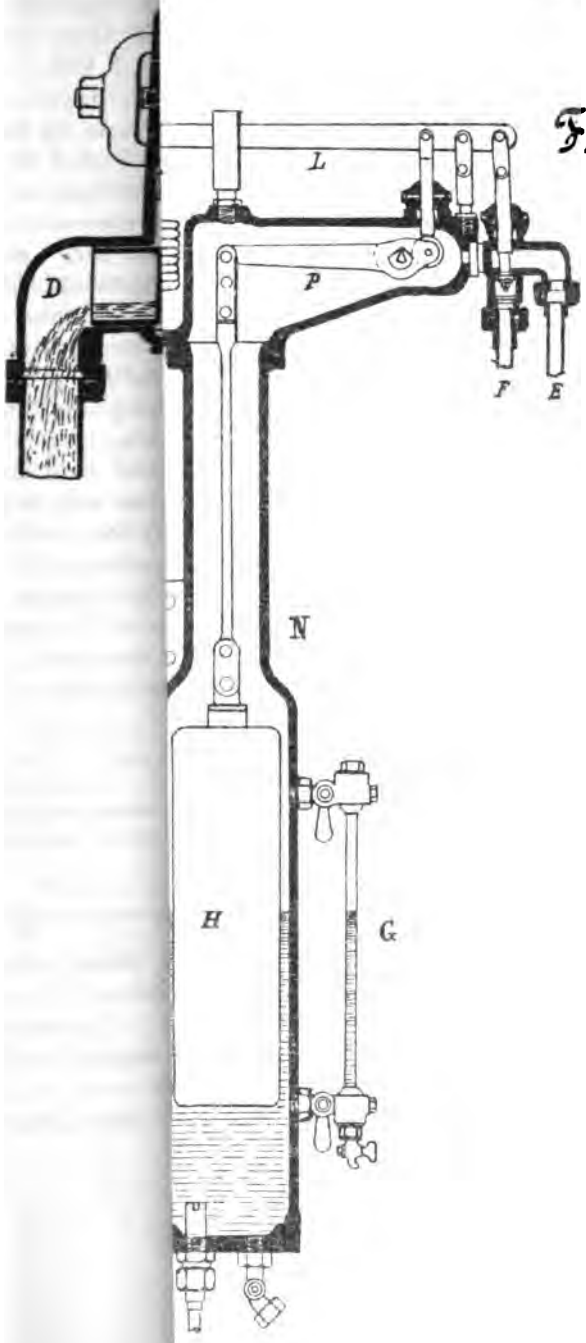

tively clean. The performance of the French dispatch vessel *Milan* is probably the best of any ship having this boiler. She has twelve, with a total heating surface of 10,925 square feet, and on trial developed 3,880 I. H. P., the speed being 18.41 knots. On the recent full-power trial of the vessels of the French Mediterranean Squadron, the speed of the *Milan*, for four hours, was 16.5 knots, the I. H. P. for which, based on the trial trip performance, would be about 2,800. Making an allowance for the different conditions of trial, the power developed was probably from 3,000 to 3,200, assuming that her bottom was clean. The boilers have been in use since 1885.

The Messageries Maritimes steamer *Ortegal* was the first steamer of the merchant service that was fitted with the Belleville boiler. Owing to its successful working there the *Sindh*, of the same line, was supplied with them last year, and now the *Australien*, a new steamer of 5,000 horse-power, is to have them.

The preliminary design for the boilers of the *Sindh* called for eight cylindrical boilers, arranged in pairs, the weight of which, including water, was estimated at 284 tons. The pressure at which they were to work was 40 pounds. Twelve Belleville boilers, working at a pressure of 170 pounds, were substituted, a reducing valve having been provided for supplying steam to the engines at 70 to 80 pounds pressure. The weight of these boilers, including water, was 159 tons, or a saving of 125 tons over the original design.

The principal data of these boilers are:

Grate surface	square feet	294.8
Heating surface	do	11,054.0
Steam space	cubic feet	505.6
Weight of boilers and fittings	pounds	333,463
Weight of water	do	21,819
Total weight	pounds	355,282
Indicated horse-power		3,300

The *Sindh* has an "evaporator," so that no salt water need be fed into the boiler, and thus one of the great objections to this boiler is removed.

The *Ortegal* has eight of these boilers, with 7,416 square feet of heating surface, and develops 2,200 horse-power; the *Australien* will have twenty, with 23,070 square feet of heating surface.

Details of Belleville boilers on board French naval vessels.

	Hirondelle.	Voltigeur.	Cocodrile.	Rigault de Genouilly.	Actif.	Milan.
Number	10	6	4	8	4	12
Indicated horse-power	2,100	1,000	450	2,100	400	3,880
Grate surface, square feet	240	120	62	251	61.18	366
Heating surface ....do	7,419	3,046	2,134	7,418	1,848	10,925
Steam space...cubic feet	314.3	120.4	60.3	280.1	68.6	.....
Weight of generators.lbs.	181,768	87,549	52,375	203,372	48,730	.....
Weight of brick-work.do.	34,100	6,996	8,800	33,000	8,800	.....
Weight of water.....do.	17,886	7,392	7,392	17,886	3,300	.....
Total weight .....do.	233,754	101,937	65,025	254,258	60,830	350,436
Weight per square foot of heating surface .....lbs.	31.5	33.4	30.5	34.3	32.9	32.1
Weight per I H. P.....do.	111.3	101.9	144.5	121	152	90

The yacht *Shearwater*, owned by Mr. Forbes, of Boston, is fitted with a Belleville boiler, which was subjected to an evaporative test by a board of United States naval engineers during the latter part of 1887.

The following comprise the principal data, with the mean results obtained during a continuous test of twenty-four hours:

Grate surface	square feet..	34.17
Heating surface	do.....	804
Steam pressure	pounds..	111.34
Temperature of—		
Feed-water	degrees Fahr..	79.40
Atmosphere	do.....	51.08
Fire-room	do.....	99.16
Uptake (about)	do.....	650
Height of barometer	inches..	30.33
Pounds of coal burned per hour per square foot of grate		12.804
Pounds of water evaporated per hour per square foot of heating surface		4.434
Pounds of water evaporated per pound of coal		8.15
Equivalent evaporation from and at 212°		9.622

The average amount of moisture in steam was 6.31 per cent.

The rate of combustion was not at all high, there being no means of forcing the draft. The coal was George's Creek, Cumberland.

EVAPORATORS.

In all modern steamers, mercantile as well as naval, and especially in those which have the locomotive type of boiler, there is a special distilling apparatus, or "evaporator," for supplying fresh water to make up the loss from leaks and other causes. Several methods are in use, the evaporation taking place either under a partial vacuum, at atmospheric pressure, or under pressure, the steam being taken either from the boiler, the receivers, jacket drains, or from the exhaust pipe.

The "evaporator" consists, essentially, of a coil or nest of tubes immersed in sea-water contained in a tank having a vapor outlet at its

top connected with the main condenser, the hot-well, or with a separate condenser.

In Weir's system, which is in use on board the Norddeutscher Lloyd steamer *Lahn*, the steam is taken from the exhaust pipe of the low-pressure cylinder; the water space of the evaporator is connected with the main condenser, the evaporation taking place under a vacuum, and the vapor formed goes directly into the condenser.

In Baird's system the evaporation takes place under pressure, a separate pump being used for circulating the water through the condensing coils. The evaporator for the *Petrel* has four coils of $1\frac{1}{16}$-inch copper pipe, with a surface of 52 square feet, contained in a cylinder and surrounded by sea-water; the feed is delivered at the water level, into a central circulating chamber. At a recent test steam was raised in one and a half minutes from water at 61 degrees. With a pressure of 51 pounds in the coils the pressure in the evaporator was $17\frac{1}{2}$ pounds, and the evaporation was at the rate of 900 gallons per day.

Tne first specifications from the Bureau of Steam Engineering in 1886 for the *Newark*, *Yorktown*, and *Petrel* called for evaporators, and they are also specified for the ships now building except the *Charleston*, *Baltimore*, *Philadelphia*, and *San Francisco*, which have auxiliary boilers.

FORCED DRAFT.

The past year has been marked by great progress in the adaptation of forced draft appliances to the boilers of merchant steamers, it having been conclusively demonstrated that it may be used continuously with success and economy. It must, however, be understood that the term forced draft, as applied to merchant steamers, has quite a different signification to what it has when speaking of naval vessels, and artificial draft would probably be a more correct term to apply to it as used in the merchant service, as the total quantity of coal burned in such cases is usually not much greater than it would be in the same boiler worked under natural draft conditions. In naval vessels the aim has been to get the maximum power out of a given weight of boiler, and consequently economy is out of the question; in the merchant service the first object is economy, and therefore the boilers are comparatively larger; in other words, the ratio of heating to grate surface is large, and economy is a natural consequence, assuming, of course, a proper supply of air.

The closed stokehold system finds little favor in the merchant service, nearly all steamers having forced draft on the closed ash-pit system. Of the steamers in which it is used, outside of naval vessels, the *Courier*, given in Table I, is the only one about which sufficient data is obtainable to make a comparison. In her case the I. H. P. given is

that from a set of indicator diagrams taken on the trial trip, and probably represents the maximum power developed. The *Olivette*, belonging to the Plant line, running between Tampa, Key West, and Havana, has this system of forced draft, but it is reported as being unsatisfactory and is not used. The two steamers building for the International (Inman) Atlantic service are to be fitted with it, but some doubts are expressed as to the success of the experiment.

Howden's system continues to meet with favor and is to be fitted in the two steamers building for the White Star line. One of the most recent applications of this system is in the *City of Berlin*, whose old machinery was recently removed and triple-expansion engines with boilers worked on Howden's system substituted. The new boilers have 324 square feet of grate* and 14,616 of heating surface, and on trial furnished steam at 150 pounds pressure for 6025 I. H. P., the air pressure being 2¾ inches at fans, 1¾ in reservoir, and ½ inch in ash-pit, and its temperature 94° at fans and 225° at inlet to ash-pit. The average I. H. P. developed during the voyage across the Atlantic, including that of auxiliaries, is about 5,600, the air pressure being 4½ inches at fans, 2½ in reservoir, and 1 inch in ash-pit, and its temperature entering ash-pit about 210°. The *Ohio* is given in Table I as a representative of this system.

Ferrando's system seems to be finding favor with ship-owners from the fact that inferior and consequently cheap coal may be burned in the furnaces. All of the steamers of the Florio-Rubattino line are fitted with it, and its continued introduction points to satisfactory working. The *Candia*, in Table I, is given to show this system in comparison with others.

Wyllie and Morison's system, which was described on page 112 of General Information Series, No. VI, continues to be fitted in steamers, and presumably with success. The *Stella*, in Table I, furnishes data for illustrating its comparative working. As will be seen, the heating surface per pound of coal burned is excessively high compared with the others, and, therefore, the economy is high. The consumption of coal as there given is the average for a voyage, and is, therefore, not strictly comparable with some of the others.

Another system of forced draft, which has been applied in several merchant steamers, was described by its inventor, Mr. J. R. Fothergill, in a paper read before the Institution of Naval Architects in March of this year. Like nearly all the others, it is on the closed ash-pit system, a casing connected with the fan extending across the front of the boiler. The air is forced into this casing, and passes into the ash-pit through gridiron valves on the back of the casing, just below the line of the grate-bars. The movement of these valves is controlled by the furnace-door

* 324 is given in the London *Engineer*, presumably on the authority of Messrs. Laird, who supplied the machinery. Mr. Howden in a letter to the same journal gives it as 270. This point is, however, of slight importance so far as the boiler power is concerned, the heating surface being the proper standard of measurement.

latch, which is fixed to a rod passing through the casing, which rod likewise carries a lever for moving the valves. When the latch is pulled back against the stop, this lever closes the valves, and thus shuts off the supply of air before the furnace door can be opened. When the door is shut the pulling over of the latch to fasten the door reverses the process.

For the admission of air direct to the gases, there is a casing behind the boiler connected with the front casing by a pipe running along the side of the boiler, and with the back connection by a pipe passing through the back head about on a level with the line of grate-bars. The mouth of the latter pipe is covered by a cast-iron box perforated with a number of small holes. The quantity of air admitted is regulated by means of a valve in the branch pipe connecting this internal pipe with the back casing, and the supply of air to the casing by an adjustable scoop on the end of the connecting-pipe where it joins the front casing.

Provision is also made for admitting air from the ash-pit to the combustion chamber, by means of boxes, perforated with small holes, placed at the end of the ash-pit, the quantity being regulated by a slide worked from the fire-room. These boxes are so arranged that they can be withdrawn when it is found necessary to rake out the combustion chamber. A vertical deflecting plate is fitted at the end of the furnace.

The air leaves the fan at a pressure of from 3 to 3½ inches, and enters the back connection at about the same pressure; the pressure in the ash-pit varies from one-half to three-quarters of an inch.

The *Etna*, in Table I, is illustrative of the practical working of this system. It will be seen that the rate of combustion is very slow, and that, like the *Stella*, the boiler is very large for the power, so that *artificial* draft would in these two cases more properly express the true state of combustion than does the term *forced* draft. The coal consumption given is the average for the voyage.

The system of induced draft with a fan in the smoke-pipe has been tried in at least one merchant steamer, but no data are at hand to show its efficiency as compared with any of the closed ash-pit systems referred to.

Thus far, foreign governments have uniformly adopted the closed stoke-hold system in naval vessels, and Table IV, page 243, shows the power developed with natural and with forced draft, under the usual trial trip conditions, in a number of recent ships; but there is no record of its subsequent use with the development of such abnormal horse-power as that indicated on trial trips; and in many of the cases cited the power was obtained only after repeated trials, during which the boiler tubes usually gave trouble. During the naval manœuvres last summer several English ships were disabled owing to leaky tubes and other boiler defects due to the use of their closed stoke-holds, and these during very short runs. The Admiralty has now ordered that on commissioning trials the engines are not to be run to develop more power than that

obtained on the contractors' trial with natural draft, which virtually forbids the use of the closed stoke-hold, and may be taken as significant of its injurious effect upon the boilers when worked to their utmost. In Table I the *Galatea*, *Undaunted*, and *Alacrity* are given as representatives of the system in naval vessels.

The system in use on the *Alliance*, described on pages 111 and 112 of General Information Series, No. VI, continues to give satisfaction, is used at all times, the vessel frequently running with only one boiler, and has never given any trouble. Its application to the boilers of the *Swatara* has been attended with success. On a dock trial in February, using only four of her six boilers, she developed 1,026 H. P. for four hours, with a maximum of 1,375. The vacuum was poor—only 18 to 20 inches—so that the boilers were at a decided disadvantage. Her trial in free route not yet having taken place, the performance of the *Alliance* last year, steaming with two boilers, is given in Table I to show the working of the system.

Great difficulty is experienced in obtaining reliable information as to coal consumption, even on trial trips; and although figures given for such a performance are of doubtful value, they nevertheless furnish a good basis of comparison, especially when the trials are of the same duration. The *Ohio*, whose boiler data are given in Table I, is reported by Mr. Howden to be very economical, the consumption being given as 1.23 pounds on her first trial, and 1.39 on a subsequent run of eight hours. On her trips across the Atlantic the average daily consumption is a little less than 34 tons of Welsh coal, and the average I. H. P., including 16 for dynamo and 24 for fan engines, is 1,899, giving a mean consumption of 1.67 pounds per I. H. P. The temperature of the air entering furnaces is about 190°, the pressure at furnace doors 1 inch, and in ash-pits from three-fourths to seven-eighths of an inch. The average daily consumption of the *City of Berlin* is about 1.5 pounds per I. H. P.

On the four hours' natural-draft trial of the *Galatea*, the coal consumption was stated to be 2.3 pounds, and on the forced-draft trial, with an air pressure of 1.15 inches, 1.97 pounds. That of the *Undaunted*, with natural draft, was 1.75 pounds.

As bearing on the question of economy in its relation to size of boiler, an interesting comparison may be made from the table. The *Galatea* has four boilers of the same size as the one whose data are given. To maintain the same power that she developed on her forced draft trial, with the same coal consumption as that given for the trial of the *Ohio*, she would have to have seven boilers, worked on Howden's system, instead of four. The *Alliance*, similarly worked, would require boilers nearly 25 per cent. larger to show the same economy, provided she had triple-expansion engines, or 50 per cent. more boiler-power with her present compound engines—basing the latter computation on the usual consumption given for compound and triple-expansion engines, 2 and 1.6 pounds, respectively.

TABLE I.—*Comparison of different systems of forced draft.*

[The I. H. P. is that for one boiler.]

Name of ship.	Type of engine.	System of forced draft.	Diameter of boiler.	Length of boiler.	Space occupied.	Heating surface. Tubes.	Heating surface. Total.	No. of furnaces.	Diameter of furnaces.	Length of grate.	Grate surface.	Steam pressure.	I. H. P.	Heating surface. Per I. H. P.	Heating surface. Per pound of coal burned.	Boiler space. Per I. H. P.	Boiler space. Per pound of coal burned.
			′ ″	′ ″	*Cu. ft.*	*Sq. ft.*	*Sq. ft.*		′ ″	′ ″	*Sq. ft.*			*Sq. ft.*	*Sq. ft.*	*Cu. ft.*	*Cu. ft.*
Courier	Triple expansion.	Closed stoke-hold	15 3	11 0	2,009	.....	2,555	4	3 2	.....	79	150	1,490	1.715	.....	1.415	.....
Ohio	....do	Howden's	13 0	11 4	1,504	1,428	1,690	3	3 2	4 6	42.75	150	715	2.364	1.700	2.124	1.513
Candia	....do	Ferrando's	11 3	14 0	1,392	.....	*a*1,577	4	.....	.....	.....	150	725	1.175	.....	1.920	.....
Stella	....do	Wyllie and Morison's.	13 9	10 6	1,485	.....	1,749	3	3 0	.....	.....	143	466	3.753	2.756	3.187	2.756
Etna	....do	Fothergill's	15 0	9 6	1,679	.....	1,862	3	3 6	.....	.....	160	485	3.809	2.827	3.462	2.827
Galatea	....do	Closed stoke-hold	14 6	16 9	2,766	3,370	*a*4,074	6	3 6	.....	125	140	* 1,467 2,301	* 2.710 1.728	* 1.178 .877	* 1.885 1.202	*.820 .610
Undaunted	....do	....do	14 6	16 6	2,725	3,464	4,014	6	3 8	6 2	135	130	* 1,410 2,150	* 2.847 1.867	* 1.626 .933	* 1.933 1.267	* 1.104 .634
Alacrity	Compound	....do	9 6	17 0	1,205	1,393	1,609	2	3 9	6 5½	48.25	100	726	2.216	.800	1.660	.599
Alliance	....do	Kafer's	9 0	9 0	572	679	822	2	2 10	5 3½	30	80	334	2.460	.916	1.712	.638
City of Venice	Quadruple expansion.	Howden's	14 0	10 10	1,668	.....	*a*1,885	3	.....	.....	40	145	*b*650	2.900	.....	2.566	.....
County of York	....do	Natural draft	12 0	10 6	1,188	1,116	1,346	3	2 9	6 0	49.50	155	492	2.736	.....	2.415	.....

*Natural draft. *a* Approximation. *b* Developed on trial; boiler designed for 900, and said to be able to furnish the steam, in which case the succeeding figures become 2.094 and 1.853.

TABLE II.—*Results of evaporative tests, with forced draft, made on one of the boilers of the French armor-clad Marceau.*

[Fuel—Briquettes d'Anzin. System of forced draft—closed stoke-hold.]

Date.	Duration of test.	Consumption of fuel.		Temperature.			Steam pressure.	Pounds of water evaporated.				Air pressure in inches of water.		Cubic feet of air per pound of fuel.
		Per hour.	Per hour per square foot of grate.	Feed-water.	Fire-room.	Uptake.		Per hour.	Per hour per square foot of heating surface.	Per pound of fuel.	Per pound of fuel from and at 212°.	At fans.	In tubes.	
1884.	*h. m.*	*Pounds.*	*Pounds.*	°F.	°F.	°F.								
Nov. 25..	4 35	4,334	61.13	.....	....	866	81	33,719	10.330	7.78	.....	2.62	.....	399.1
1885.														
Mar. 7..	5 3	4,356	61.44	52.7	78.8	943	85.6	34,368	10.531	7.89	9.47	2.704	.343	362.7
Mar. 13..	5 15	4,357	61.45	51.8	83.4	925	86.7	34,994	10.722	8.03	9.65	2.554	.339	340.4
June 22..	5	2,914	41.04	66.2	83.3	792	86	24,329	7.454	8.35	9.91	.793	.059	343.6
July 13..	5	3,630	51.20	73.4	93.2	884	86	30,056	9.209	8.28	9.77	1.105	.229	370.8

TABLE III.—*Results of evaporative tests, with forced draft, of one of Thornycroft's torpedo-boat boilers.*

[Fuel—Nixon's navigation coal. System of forced draft—closed stoke-hold.]

Date.	Duration of test.	Grate surface.	Heating surface.	Steam pressure.	Temperature.				Pounds of coal burned.			Pounds of water evaporated.				Air pressure in inches of water.			Pounds of air per pound of coal.
					On deck.	Feed-water.	Stoke-hold.	Uptake.	Per hour.	Per hour per square foot of grate.	Per hour per square foot of heating surface.	Per hour.	Per hour per square foot of heating surface.	Per pound of coal.	Per pound of coal from and at 212°.	Stoke-hold.	Ash-pit.	Furnace.	
1880.	*h. m*	*Sq. ft.*	*Sq. ft.*		°F.	°F.	°F.												
April ..	2	18.9	618	117	46.5	53.5	75	1,073	925	48.94	1.5	6,535	10.57	7.06	8.51	2.00	1.47	1.35	25.5
Do...	2 7	18.9	618	117	57.7	57.5	85.3	1,192	1,177	62.2	1.9	7,770	12.57	6.60	7.91	3.00	2.29	1.87	25
Do...	1 39	18.9	618	115	49.5	54.5	78	1,260	1,472	78.9	2.38	9,325	15.09	6.33	7.63	4.00	3.26	3.00	24.5
Do...	1 27	18.9	618	115	58	56	82.6	1,144	1,815	96.03	2.93	10,841	17.54	5.97	7.20	6.00	5.25	4.33	22.5

Yarrow subsequently made experiments with the boiler of a third class torpedo-boat, to ascertain the causes of the resistance to the passage of air through the boiler. His boiler had 16 square feet of grate surface, and the coal burned per hour was 105 pounds per square foot of grate. With an air pressure of 5 inches of water in the stoke-hold, it was found that 1 inch was due to the resistance of air in passing though the fuel (about 6 inches thick), 3¼ inches in passing through the tubes (the area

through ferrules was 220 square inches), and three-quarters of an inch through uptake and smoke-pipe.

TABLE IV.—*Relation between the indicated horse-power developed with natural and with forced draft, and the increase of power due to the use of the latter.*

Name of vessel.	I. H. P.		Grate surface.	Heating surface.			Gain using forced draft.
	Natural draft.	Forced draft.		Total.	Per I. H. P., natural draft.	Per I. H. P., forced draft.	
			Square feet.	*Square feet.*	*Square feet.*	*Square feet.*	*Per cent.*
Anson	8,319	12,567	756	20,244	2.433	1.611	50.94
Benbow	8,614	10,853	756	20,244	2.350	1.865	25.99
Camperdown	8,606	11,741	756	20,244	2.352	1.724	36.43
Australia	5,800	8,876	500	*a*15,900	2.744	1.791	53.03
Galatea	5,868	9,205	500	*a*15,900	2.710	1.673	56.87
Orlando	5,617	8,602	540	16,055	2.858	1.853	54.21
Undaunted	5,640	8,602	540	16,055	2.843	1.866	52.52
Narcissus	5,300	8,574	534	*b*16,000	3.019	1.866	61.77
Immortalité	6,090	8,737	488	*c*15,220	2.499	1.742	43.43
Hero	4,350	6,159	507	14,224	3.270	2.309	41.59
Forth	3,578	5,744	380	11,532	3.223	2.001	60.54
Sfax	4,333	6,400	538	18,837	4.347	2.943	47.70
Archer	2,219	3,829	224	5,900	2.659	1.541	72.55
Brisk	2,617	3,807	224	5,900	2.254	1.550	45.47
Cossack	2,342	3,640	224	5,900	2.519	1.621	55.42
Porpoise	2,477	3,943	224	5,900	2.382	1.522	59.18
Iljin	2,230	3,550	182	7,746	3.473	2.182	59.19
Dogali	5,347	7,600	430	12,620	2.360	1.660	42.14

a Estimate based on tube surface (13,480), and size of boiler.
b Estimate based on tube surface (13,340), and size of boiler.
c Estimate based on tube surface (13,152), and size of boiler.

In the above table, the natural-draft power is, in some cases, that developed with "open stokeholds", that is, natural draft assisted by fans discharging into the fire room. On the trial of the *Galatea*, under such conditions, the air pressure was one-eighth of an inch.

During the early part of January, Mr. W. G. Spence read a paper before the North-East Coast Institution of Engineers and Ship-builders at Newcastle, England, on the Combustion of Coal, and Some Evaporative Experiments with Natural and Forced Draft, which contains the results of the most valuable and carefully conducted experiments yet made bearing on the subject of forced draft. This paper, which was published in Engineering, February 10 and 24, and March 2, is, with a few unimportant omissions and some alterations in the arrangement of the matter, given on this and succeeding pages to page 262.

Professor Rankine, in his manual, The Steam Engine, states: "It is unnecessary for practical purposes to compute the air required for the combustion of fuel to a great degree of exactness, and no material error is produced if the air required for the combustion of every kind of coal and coke used for furnaces is estimated at 12 lbs. per pound of fuel."

Perfect combustion with this quantity of air is, however, only possible on a very small and experimental scale, where due attention and time can be given for perfect diffusion, and the bringing of each atom of carbon and hydrogen into what may be termed actual mechanical contact with its combining equivalent of oxygen. In practical operations on a large scale, such as steam-boiler furnaces, the available time is so short and the conditions, even when at their best, under which the air can be introduced to the solid carbon and coal gas are so little calculated to help diffusion, that a greater quantity than is chemically necessary has to be supplied to facilitate the combinations of the atoms. For a given percentage of combustible combining with oxygen the less this surplus air the better; and with a given surplus this percentage of combining combustible is a measure of success in diffusion. Owing to the more searching nature of air from a blast under pressure, a smaller surplus is required when using forced draft; and on the authority of Professor Rankine this surplus may, in the case of ordinary well-constructed boiler furnaces, be taken at 6 lbs. and 12 lbs. per pound of coal for forced and natural draft, respectively; making with the 12 lbs. chemically necessary, the total rate of air supply required for maximum efficiency 18 and 24 lbs. per pound of coal.

The principal products of these combinations are the following:

Case I.—First, if the total quantity of air (that is, air chemically necessary plus air of dilution) containing the oxygen is just sufficient, neither more nor less, and its diffusion amongst the solid carbon on the bars and the hydrocarbon gases rising from the coal has been so complete that each atom of carbon and hydrogen is brought into mechanical contact with its combining equivalent of oxygen, then this oxygen combines with the hydrogen as it issues from the coal as gas in the proportion, by weight, of 8 : 1, forming steam; the remaining oxygen combining with the carbon of the coal gas and the solid carbon on the grates in the proportion, by weight, of 8 : 3 forms carbonic acid gas, intense heat being produced by and during these combinations. This steam, along with the carbonic acid gas, the nitrogen of the air which has had its oxygen chemically combined with the combustible constituents of the coal, and the remaining surplus quantity of air, passes up the chimney as colorless incombustible gases, the products of as perfect combustion as this ideal ordinary grate-furnace would permit of, having produced in the boiler the greatest quantity of heat obtainable under the circumstances.

Case II.—If the total air supply is deficient in quantity, but so introduced that its efficiency of diffusion is as perfect as in the first case—that is, that as great a percentage of its oxygen is taken up and usefully employed; then, as before, part of this percentage of the oxygen will combine with the hydrogen in the coal gas, forming steam; the remaining percentage combines with part of the solid carbon and carbon of the coal gas in the proportion to form carbonic acid, while part of the

liberated carbon, not finding its equivalent of oxygen, becomes deposited, and mechanically mixing with the steam, forms smoke. Under the condition the total quantity of air to be raised in temperature is less than in Case I, but this is only obtained by a reduction in the number of atoms of combustible combining, and the total resulting temperature is lowered in proportion to the amount of carbon thus escaping uncombined with oxygen. The resulting products passing up the chimney from this condition of partial combustion are, carbonic acid, the nitrogen of the percentage of air that has been usefully employed, the remaining percentage of air that has not had its oxygen taken up, and steam containing solid carbon in mechanical suspension, rendering the escaping gas visible as the dark stream termed smoke, its intensity of darkness in color depending on the proportion of solid carbon thus suspended.

Case III.—The air may also be so scantily introduced or, though sufficient, be so badly diffused, that part of the coal gas escapes direct into the chimney. Also part of the carbonic acid in passing up through or over the solid carbon on the bars may take up an additional quantity of carbon, thereby reducing it from carbonic acid, that is, three parts carbon to eight of oxygen, to carbonic oxide, namely, six parts carbon to eight of oxygen, and if the latter be not supplied with sufficient oxygen to again raise it to carbonic acid, a diminution of temperature and loss of heat is the result.

Case IV.—In the above cases it has been assumed that the oxygen has been brought into contact with the carbon and hydrogen at the temperature necessary for their immediate chemical combination, but if the air supplied is more than sufficient (or even less, provided the efficiency of diffusion is not so great) a cooling effect is introduced, owing to part of the heat produced by atoms that have combined being absorbed in expanding and raising the temperature of this unnecessary surplus.

So far as my experience is concerned, I have only found it possible to introduce air at the rates given by Professor Rankine when very great attention is given to its distribution, and the manner of introducing it to and among the combustibles on and arising from the grates. The real practical difficulty in air introduction lies in this: that if each atom of carbon and hydrogen of the coal is not first brought into actual mechanical contact with its combining equivalent of oxygen it can not combine with it, and is lost or worse than lost for the production of increased temperature. Thus we have seen in Case II that if less air than is necessary is introduced, or in Case III that the air, though sufficient in quantity, is introduced in such a manner that the atoms of its oxygen are not so diffused throughout the atoms composing the mass of the gases as to come into actual mechanical contact with each of these individual atoms of combustible, then part of them pass off unconsumed, and a decreased furnace temperature is the result. Also in Case IV, that if the arrangements for diffusion are perfect, but air is in-

troduced in too great quantity, a decreased temperature is the result; for, as was shown, part of the heat produced is absorbed by the atoms that have not combined.

Thus the temperature of the products of combustion, or evaporative efficiency of the coal, may be reduced from three distinct causes:

1. Rate of air supply being deficient. Case II.
2. Diffusion of air supply being defective. Case III.
3. Rate of air supply being excessive. Case IV.

Or by two of these in combination, as, for instance, insufficient rate of supply, introduced in such solidity of stream that part escapes without coming in contact with either carbon or hydrogen. It will thus be seen that correct quantity of air is merely one thing, what is equally important being the manner and place of its introduction, the measure of success being the percentage usefully employed; and when we consider the conditions obtaining in actual practice in boiler furnaces, the immense difficulty of proper, and practical impossibility of perfect diffusion becomes apparent. Take for example a boiler in which the combined area over the two bridges = 2.3 square feet, and total area through the tubes = 3 square feet. Now, assuming that the air is supplied at the rate of 24 pounds per pound of coal and that the amount of coal burned = 250 pounds per hour, the weight of air passing through the boiler per second $= \frac{250 \times 24}{60 \times 60} = 1.66$ pounds; the temperature of the fire with this rate of supply should theoretically be about 2500 degrees Fahr., and if the temperature in the uptake = 600 degrees Fahr., the mean temperature between furnace and uptake $= \frac{2500 + 600}{2} = 1550$ Fahr., which would give a total volume of gases passing through the boiler approximately $= (12.5 \times 1.66) \times \frac{(461 + 1550)}{493} = 84$ cubic feet per second, that is a velocity of about $\frac{84}{2.3} = 36.5$ feet per second over bridges, and of $\frac{84}{3} = 28$ feet per second through the tubes. The distance from center of grates to outside end of tubes = 12.5 feet, therefore in a stream having a velocity of at least 28 feet per second there are available about $\frac{12.5}{28} = 0.45$ of a second of time for the complete diffusion of the atoms of another fluid throughout the atoms of its mass, and during this time it is very questionable if any further effective combinations take place after the gases have once entered the tubes.

The above calculation is necessarily a very rough approximation, as the temperature of the furnace would probably be less than 2500 degrees Fahr., and the correct mean temperature to use should not be the arithmetical mean between that of the furnace and the uptake.

The writer frequently noted with a stop-watch the interval of time between a shovelful of coal dropping on a bright fire and the first

appearance of smoke at the top of the chimney. This he found to vary from three seconds to four seconds, and as the distance from grates to chimney top by the shortest route the gases could take = 48 feet, their mean velocity through both boiler and chimney must have been at least from 16 feet to 12 feet per second.

From this is apparent the necessity of having very careful arrangements for introducing the air in such a manner as to be as much as possible broken up into thin laminæ, jets, or whatever form is found to be most practically suitable and efficient for giving a maximum of surface from a minimum of quantity.

Of this air, part is required for combination with the solid carbon of the coal and part for combination with the carburets of hydrogen or coal gas; the relative quantities necessary for each being in the proportion of 2.37 to 1.* And as it seems reasonable that the air containing the oxygen for combination with the gases will be better introduced to them direct, instead of first passing up through the coal on the grates and thus becoming diluted with carbon, the necessity for a well-distributed and plentiful supply of air above the grates is seen.

If the coal could be continuously and evenly fed on the fire it might be just possible that as much as this one-third of the whole air supply could beneficially be introduced direct above, the remaining two-thirds necessary for the solid carbon being brought through the grates from below, as then the state of incandescence of the fuel would continue regular, and the amount of coal gas given off per unit time would be a constant quantity; but in actual practice with hand firing (which when carefully attended to seems to hold its own against most mechanical appliances) the quantities of coal gas distilled are far from regular, being greater shortly after firing and tapering away to little or nothing when the fire has become bright throughout or coked; at which period the only air necessary, besides what would find its way up through the grates, would be a quantity supplied direct at the top, and just sufficient again to raise to carbonic acid any gas that might have been reduced from acid to oxide in passing up through or over the coked fire. Thus at one period it appears as if one-third of the whole air supply could with advantage be introduced direct above the grates, and at another a less amount seems necessary; and as there has as yet been no satisfactory automatic arrangement for regulating the relative amounts, and as it has generally been found unsatisfactory to depend for it on the human element in firing, we seem left to the practical question of finding what relative openings for continuous supply are in actual work found to be the most economical mean between these two conditions.

The first result during and after placing a charge of fresh coal on a bright fire in a furnace is a reduction of temperature from several distinct causes: first, from loss of effect through the fresh coal lying on the

* Fairbairn's "Useful Information for Engineers.

top surface of the red fire, thus obstructing the radiant heat from striking the crown of the furnace; and, lastly and chiefly, from heat absorbed or rendered latent in changing the molecular condition of the coal from a solid to a semi-solid or viscous substance, and in distilling off the coal gas contained therein. If this gas on being released is brought into contact with sufficient air before its temperature has fallen below its point of ignition or explosion its atoms of carbon and hydrogen combine with the oxygen of the air and an increase of temperature is the result. But if air to supply a sufficiency of oxygen is not admitted or the gas is not allowed to travel till its temperature has fallen too low before meeting the air a loss of heat is the result, as we then lose the whole heat which has been rendered latent in the work of distilling the gas, as well as that which the coal gas would supply if ignited. Also, if the air supplied from below the grates, in passing up through the coal, should become so charged with carbon as to issue at the top surface in the form of carbonic oxide an additional supply of oxygen must be given it by air admitted direct above the coal to raise it again to carbonic acid. If this be not done the carbon escapes in this half-burned state and may not be readily observed, for carbonic oxide being invisible there is nothing to detect it by unless it should meet sufficient oxygen through leaks in the uptake or have still sufficient temperature left on reaching the chimney top, when, if this be the case, on there meeting the oxygen of the atmosphere it will combine with it and become visible as flame; and as carbonic oxide combines with oxygen at a comparatively low temperature the effects of this are sometimes seen in practice by the interior of uptakes bursting into flames or by fiery chimney tops. This carbonic oxide flame is of a blue color, by which it can easily be distinguished from the ordinary red flame, which may come into existence in the uptake by coal gas escaping direct through the tubes and only igniting in the uptake when meeting there its combining equivalent of oxygen. The former condition of affairs was very noticeable in trials Nos. 1, 2, 3, Table I, in which no air was admitted except such as passed in between the firebars and up through the coal in the grates. On several occasions the uptake was observed to become completely full of a blue flame.

On one occasion, just before the violet flame commenced, the uptake temperature registered 750° Fahr.; a few minutes afterwards, when filled with blue flame, the temperature, as found by Siemens's pyrometer, was 910° Fahr., the fires not having been touched in the meantime.

From the above it will be observed that during the whole time there are indications of want of oxygen to the furnace, first after firing, by the emission and continuance of dense black smoke; next when the fires have become clear and even quite thin, by the appearance of the blue flame of carbonic oxide in the uptake, indicating that the oxygen of the air entering through the grates had been first converted into carbonic acid near the bottom of the fire, and then in passing up through

or over the bright coke fire had been reduced to carbonic oxide, falling in temperature in doing so; but had some additional air been supplied direct above the coal the combination of its oxygen with the carbonic oxide would have taken place in the furnace, raising its temperature by shortening the flame, and thus increasing the efficiency of combustion.

In heavy fires of some 12 inches thick this condition of affairs will not be improved by increasing the draft or pressure of air below the grates only, as by so doing the rate of combustion is only increased, and it will be found that within reasonable limits of pressure the rate of air supply to fuel remains practically unaltered. This fact the writer has noticed in firing some torpedo-boat boilers of the locomotive type, where an even fire of some 12 inches thick was maintained, and trials conducted with pressures of air in the ash-pit varying from 2 inches to 5 inches of water, no air being admitted direct above the grates except such as passed in while the doors were open charging. Throughout the whole of these trials the units of air per unit of coal, as determined by the amount of air entering the ash-pit, varied but little, and was in all cases below what is necessary for full and proper combustion and dilution of both gases and solid carbon, that is, for perfect combustion. A similar result was also found in the furnaces of a merchant-ship boiler when burning thick fires of small coal on grates on the Ferrando system. In this case the fire-bars were placed crosswise, each three-eighths of an inch thick, with one-sixteenth of an inch air spaces, all the air being forced up through these at about one-half of an inch pressure in the ash-pits. The pressures in the furnaces and combustion chambers were so balanced by the chimney damper that on a door being opened no air entered, but the flame kept pulsating backwards and forwards in the doorway, being neither drawn in nor blown out.

Keeping thin fires to economically bring sufficient free oxygen up through the fires for combination with the gases rising at the top is practically a very difficult proceeding, especially under forced draft, as then the pressure of air is very apt to burn the fire into holes. After having had a fire carefully leveled and the fresh coal spread all over, so as to make an even thickness of some 6 inches, on opening the door some minutes afterwards the top surface of the coal would be a good deal caked, with here and there several cracks, through which the air could be seen blowing strongly; and thus, instead of coming up and issuing in equal amounts per unit surface, it was introducing itself in a few dense streams, a method by no means advantageous for easy and rapid diffusion; and probably the furnace was discharging into the uptake at the same moment both carbonic oxide and heated atmospheric air. By introducing the air for the gases direct to them at the top a more even state of incandescence throughout the mass of the fire is also obtained. This was particularly noticeable in trials Nos. 7 and 8, in Table II, when a few holes only, just above the doors, were open, and the fires kept as thick as the high grates then in use would permit. On

opening the doors some time after charging, the coals in way of the holes, and just where the air would strike, were always found quite red and charred, while the surrounding surface still remained black.

Under natural draft the difference in the very look of a fire supplied with a well-distributed and proper supply of air is very marked. When the quantity of air is deficient, too great, or badly distributed, the deeper yellow colored, long, trailing, smoky flame is seen; and this, though somewhat formidable in appearance, is much lower in temperature and far less efficient than the lighter colored, shorter, clear, fiery-looking appearance obtaining in a properly-regulated furnace.

In considering the best practical method of introducing the air direct to the gases several considerations must be kept in view; if introduced through the furnace fronts at A, Fig. 1, Plate 5, this has the advantage of passing it over the whole length of the grate, and thus, having a greater length of run, it gains more time for diffusion. The holes should, however, be well distributed and kept as low in the fronts as possible, as there would appear to be some danger of air introduced at the top passing along just under the plate of the furnace crown. The fronts should be constructed of double plates, with the holes so arranged that nothing is lost through them by radiation.

If introduced through the top of the bridge at B, Fig. 1, the air loses something in length of run, but has the advantage of entering the furnace at a point where all the gases must necessarily pass and where there is always a high temperature; also, in issuing from the top of the bridge, the air is injected among the gases normally to their line of motion, which is a condition very favorable for assisting their diffusion. This method has, however, the disadvantage that the holes can be very easily covered over by any slag or clinker which may find its way to, and remain lying on the top of the bridge. It is also somewhat difficult to arrange a form of hollow bridge which would long stand the heat of the fire. Introducing the air through the bottom part of the back bridge at C has the advantage of its always being possible to see from the stoke-hold if the holes are clear, but they should be kept as high up as possible, as dirt soon accumulates in the bottoms of the combustion chambers, and in an ordinary return-tube merchant-ship boiler this would eventually rise and cover the holes.

The boiler used in these experiments is shown in Fig. 1, Plate 5, the principal data being as follows:

Heating surface, in square feet:	
Furnaces	42
Tubes	362.25
Combustion chamber:	
Sides and top	30.37
Furnace end	3.94
Tube plate	3.67
Outer tube plate	3.67
Total	445.9

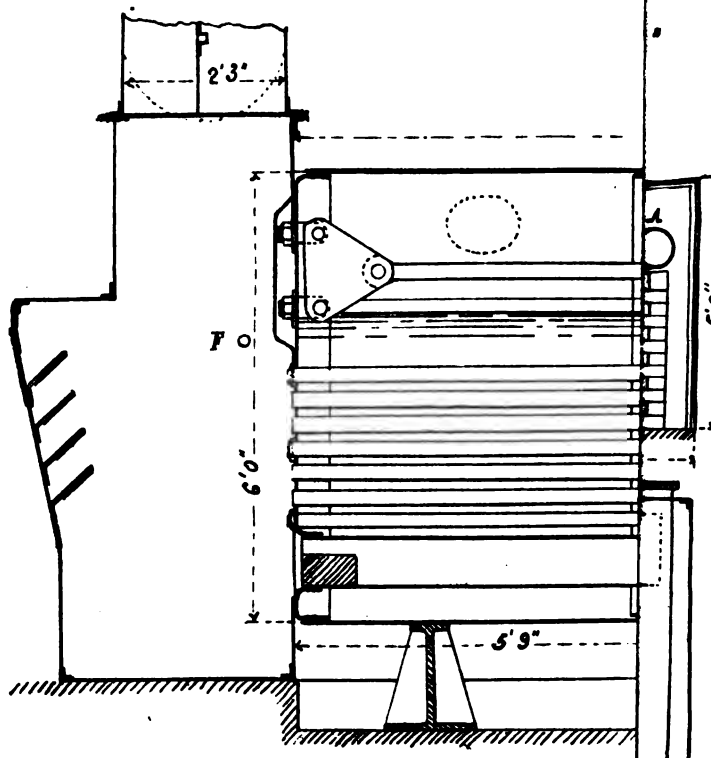

Fig. 2.

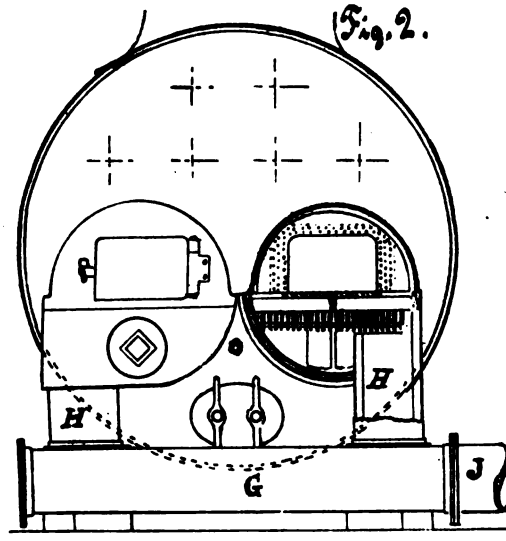

Area over bridge, in square feet	2.3
Area through tubes, in square feet	3.0
Space for gases, in cubic feet:	
Between grates and tubes	65.0
Inside tubes	16.8
Total	81.8
Water surface, square feet	80.5
Steam space, cubic feet	107.25

The boiler was comparatively new, fairly clean, and in good condition throughout. The whole circumferential surface was clothed with about 2½ inches of non-conducting cement, the front end being the only surface exposed to radiation. It supplied steam for driving several small engines, the pressure being kept steadily at 55 pounds above the atmosphere, and the surplus steam blown off by a special relief or safety valve. The escaping steam always appeared quite dry, and there was no appearance of priming. Before beginning each trial the fires were burned very low and quite clear. Their condition was then carefully noted and at the end of the trial they were burned down and left at the same level and condition, this method being considered good enough for a series of comparative trials such as those made.

The same fireman was employed during all the trials and level fires were worked. They were disturbed but little; the charges varied from 56 to 82 pounds, and were spread evenly over the grates, then left for some time, when they were turned up and leveled with the rake, and left till ready for a fresh charge. Neither the slice nor pricker was used, and both fires were charged or raked at the same time.

The tubes were cleaned before each trial and the water fed to the boiler carefully measured, the drain-pipe from the water-gauge being led back to the water-tank so as to obviate every loss from that source.

It would have been advantageous for efficiency of combustion to have introduced a hanging bridge or baffler behind the fire-bar bridge H, Fig. 1. The gases striking against and being deflected downward from this bridge would have become more thoroughly diffused. This would at the same time, however, tend to check the draft, and though favorable for efficiency would have slightly reduced the rate of evaporation.

Taking first the natural-draft series (Table I), page 260, the guiding idea in these was to keep the firing as similar as possible in all the experiments, and by varying the rate of air admission above the grates to note what effect this had on the efficiency of combustion. For this purpose each furnace front was fitted with 44 air-holes (A, Fig. 1), each hole being tapped five-eighths inch in diameter, so that by inserting screw-bolts as plugs the number of open holes could be regulated or abolished. The bottom part of each back bridge was fitted with 7 holes three-fourths inch in diameter (C) the whole or any number of which could be stopped up by inserting bolts into them with a long tongs. On the parts of the grates which were bricked over the boxes B, Fig. 1, were placed; these,

being open at the bottom and having each 24 holes five-eighths inch in diameter in the top, allowed air to rise direct from the ash-pit to the coal gas as it passed. These boxes were only put in place in the trials where they are shown in column 17 as having been open; in all the others where no air is shown as being admitted through the top of bridges they were removed for fear of leakage and the spaces built up with fire-brick.

Each ashpit was fitted with a sheet-iron mouth-piece fitting closely to the dead-plate and boiler. All the air, both for direct supply above the grates and for passing up through the fire, had to enter through these mouth-pieces, and the velocity of the current through each was taken every fifteen to thirty minutes by two anemometers, both being lashed on the end of a long light crutch, which permitted of the operator standing some 4 feet back from the mouth-piece, and moving them all over the section of the tube. Each reading was the mean of a three to four minutes' record. In using them both at once in the way indicated the one formed a check upon the other, and their respective readings seldom differed by more than 2 per cent. The mean temperature of the atmosphere was got from half-hourly readings taken from a thermometer hung in the shade and protected from all radiant heat, and from this temperature and the mean of the anemometer readings the pounds of air per pound of coal were calculated. The temperature in the uptake was got from half-hourly readings taken by a Siemens pyrometer. To this method there was the objection that the range of variation in the temperature was so considerable that there was no certainty that half-hourly readings would give a fair mean. With a view to overcoming this uncertainty a series of trials was conducted, during which the temperatures were taken every minute from a pyrometer having a dial like a steam-gauge, the index hand of which was moved round by the expansion-rods, from which the temperature at any instant of time could be read. These temperatures were also checked by half-hourly readings taken with the Siemens pyrometer, the copper cylinders of which were carefully weighed and the temperature worked out from this and the rise in temperature of a known weight of water. In taking the temperatures as given in column 6, Tables I, II, III, and IV, it was inserted at the point F, and these latter can hardly be relied on as a fair guide to the mean temperature of the uptake. It was observed that when the holes at C, Fig. 1, were opened the range of variation of temperature decreased below what it had been with no air direct to gases; it still further decreased on opening out the holes at A, Fig. 1, but on further increasing the air to gases, by also opening out the boxes B, the range of variation rose considerably. It was likewise noted that when little air was admitted direct to the gases a short and sudden rise of temperature occurred in the uptake on opening a fire-door to charge a furnace, but that when a larger supply was admitted a sudden drop in uptake temperature was the immediate result of opening a door.

With a view to determining the effect on the temperature of the uptake of air admission direct to gases, a series of experiments was made the conditions in each case being similar, except that in the first series the supply of air was gradually increased, whereas in the second it was gradually diminished. It was found from the experiments that as the air direct to gas is increased the mean temperature rises, the smoke diminishes both in intensity and duration, and the water evaporated per pound of coal increases.

The practical arrangements in the furnace fronts and bridges did not permit of the supply of air to the gases being increased until it was more than sufficient, and thus the turning-point between sufficiency and excess was not found.

From Talbe I it will be noted that as the rate of air supply to gas is increased the efficiency of combustion rises, the difference between no air opening above and a ratio of 1 : 24, being 11.8 per cent. increase in favor of air direct above. Also, when no air was admitted direct to the gases the chimney emitted large volumes of dense black smoke, lasting for about three and a half minutes; this was followed by from one and a half to two minutes of smoke, taking from three to three and a quarter minutes to die away to transparency, the total duration of smoke being some eight minutes, by which time the fires were about ready for raking, which again sent up a fresh supply, and by the time this had died away it was nearly time to charge again, so that the chimney was only free from smoke for a very small percentage of the total time of trial.

The conclusions to be drawn from Table I appear to be:

(1) That it is impossible to obtain satisfactory combustion in furnaces having the whole air supply drawn up from the ash-pits through the fires only.

(2) That with any arrangement of grate similar to that used in these experiments a collective area of not less than $\frac{1}{24}$ to $\frac{1}{20}$ of the open space between the fire-bars should be allowed for the admission of air direct to the gases. That this area should be made up from holes five-eighths of an inch, or at most three-quarters of an inch, in diameter spread over the furnace fronts, doors, and bottoms of back bridges.

(3) That, even having this provision for air supply, with the thickness of fire necessary in practice, it is extremely difficult to get a rate of air supply over 20 pounds air per pound of coal, and that the chances of the air supply being deficient are much greater than that of its being excessive.

(4) That with a sufficient and properly-distributed supply of air direct to the gases, the same rate of evaporation can be obtained from a boiler as with the air passing up through the fires only. That the coal consumption will be reduced some 10 per cent., while the smoke will be diminished fully 50 per cent. both in intensity and duration.

The above remarks refer to North Country coal of fairly good quality and to boilers working at moderate rates of evaporation, say 5 to 6

pounds of water from and at 212° Fahr. per square foot heating surface per hour, with a rate of combustion of about 17 pounds of coal per square foot of grate per hour. With Welsh coal the rate of air supply direct to the gases might probably have to be somewhat reduced, but would still remain a very considerable amount.

Turning now to the forced-draft series, the intention there was to keep the rates of evaporation as nearly similar as possible to those that had been worked under natural draft, and note the efficiency of combustion, first, when using forced blast at atmospheric temperature, and then with the blast heated to as high a temperature as could probably be attained by any apparatus of reasonable dimensions for utilizing the waste heat of the escaping gases in the uptake. The blast was created by a fan, the air from which was driven through an air heater, from which it passed into the main duct G, Fig. 2, and passed into the closed ash-pits and fronts by the branch pipes H. The volume of air was measured by an a nemometer placed at J in the exit pipe of the heater. The air during the hot-blast trials was measured in the same manner, and its temperature got by a mercurial thermometer hung in the center of the main duct about the point G. This arrangement prevented any discrepancy in the apparent temperature due to radiation from surrounding bodies, and the temperature obtained was that of the air alone. A section and plan of the air heater is given in Figs. 5 and 6; it was constructed from the bottom tier of tubes of an old Root's boiler, which had some time before been dismantled. It consisted of a cast-iron entry pipe A, 9 inches, inside diameter; this was connected to the exit pipe B, which was also of cast-iron, and 10 inches inside diameter, by 12 wrought-iron pipes C, each 5 inches inside diameter, the whole was inclosed in the sheet-iron case or house D, containing the grate E, and fitted with a chimney, F. In all the trials the air passed through these tubes, only that during the hot-blast series, Table IV, a strong coke fire was kept burning on the grate E, which raised the temperature of the passing air to that given in column 5, Table IV, which is the mean of half-hourly readings taken from the thermometer at the point G.

Taking first Table II in this series, the grates used were the same as had been employed for the natural draft trials as shown in Fig. 1. On these it was found impossible to obtain any satisfactory results. Owing to the small diameter of the furnaces the fires could not be kept thick enough to prevent their being burnt into holes. In endeavoring to reduce this evil the small space left between the coals and the furnace crown precluded any chance of satisfactory combination of oxygen with the gases from the coal. Even under these circumstances, and with the area for the air direct to these gases reduced to $\frac{1}{150}$ of the open space through the grates, the rate of air supply with grates 1 foot 10 inches long and an air pressure of 0.625 inches water in main duct G, equaled 20.7 pounds air per pound coal, as in trials 7 and 8. The open space between the fire-bars in the grates amounted to two-fifths of

the whole grate area, and owing to this, and the restricted space between the fires and the furnace crowns, a considerable amount of flashing back occured on opening the fire doors. The best results obtained were those in trials 3 and 4, when a mean 9.57 pounds of water from and at 212° were evaporated per pound of coal, giving an efficiency of 0.678. This was with an area for direct air supply to gas of one-thirty-first of the total open space between fire bars, and a rate of total air supply of 26.6 pounds of air per pound of coal. The highest efficiency under natural draft was 0.727, or 7.2 per cent. better than the forced draft results.

From the results of the trials given in Table II it was concluded that no satisfactory results could be obtained in these furnaces on grates as shown in Fig. 1. It was therefore decided to remove the fire-bars, and fit others having a much smaller percentage of open space between them. By doing this, and lowering their level considerably below the center line of the furnace, it was hoped that the supply of air from below would be so curtailed as to allow a proper amount to be supplied direct to the gases, still leaving the total rate of air supply not more than 18 or 20 pounds per pound of coal. The grates shown in Figs. 3 and 4 were therefore fitted. In these the line of fire-bars was dropped down to 5 inches below the center line of furnace. By this means a fire some 11 inches thick could be maintained; a reasonable amount of space between the coal and the furnace crown being still left. The bars were three-eighths inch thick, having air spaces one-sixteenth inch wide, giving a total open space between the bars of one-seventh the total grate area, instead of two-fifths as formerly. Owing to the lowness of the grates, and the consequent difficulty of making satisfactory longitudinal side bars, the fire-bars were placed crosswise, as shown at A, Fig. 4. The results from these grates with forced blast at atmospheric temperature are given in Table III. Trials 1 and 2 give results of working at about natural-draft rates of evaporation, the grates being reduced so as to make the rate of combustion 39.5 pounds per square foot of grate per hour, and the ratio of heating surface to coal 1.56. No air was admitted direct to the gases, and the total rate of air supply was 17.1 pounds per pound of coal. The evaporation was 9.41, giving an efficiency of 0.667; the corresponding figures with natural draft and no air direct to gases were 9.166 and 0.650, or an increased efficiency of 2.6 per cent. in favor of forced draft.

In trials Nos. 3 and 4, 29 holes $\frac{3}{16}$ inch in diameter were opened round each door, giving an area for air direct to gas of rather more than $\frac{1}{10}$ the total open space between the bars. The rate of combustion was 37 pounds per square foot of grate, and the heating surface per pound of coal 1.66 square feet. The total air supply was 20.3 pounds per pound of coal, the evaporation from and at 212°, 10.675 pounds. Compared with Nos. 1 and 2 these trials give an efficiency of 13.5 per cent.

in favor of the air supply direct to gas. The best results got with natural draft were 10.25 pounds, or 4.1 per cent. in favor of forced draft.

In trials Nos. 5, 6, and 7 the opening for air to gas was increased to rather more than $\frac{1}{7}$ of the open space through the grates; with this ratio of opening a rather lower efficiency was obtained. The purpose of trial No. 14 was to keep the ratio of heating surface to coal the same as in trials Nos. 3, 4; 5, 6, 7, but to increase the rate of combustion to 47.5 pounds of coal per square foot grate per hour by reducing the area of grate from 7.2 to 5.8 square feet, and increasing the pressure of air in ash-pit to 0.66 inch of water.

In trials Nos. 17 and 18 the ratio of heating surface to coal was also kept about the same, and the rate of combustion reduced to 31.5 pounds per hour by increasing the grate surface to 8.25 square feet and reducing the pressure of air in the ash-pit to 0.3 inch of water. In neither of these series was so high an efficiency reached as that got in trials Nos. 3 and 4. The intention of trials Nos. 8, 9; 10, 11; 12, 13 was to show at what rate the efficiency would fall consequent on increased rates of evaporation.

In Nos. 15 and 16 the rate of evaporation was decreased below that of Nos. 3 and 4 to observe what increase of efficiency would follow.

In the hot-blast trials Nos. 1, 2, 3, 4, 5, Table IV, the ratio of heating surface to coal was kept as nearly similar as possible to that in trials Nos. 3, 4; 5, 6, 7, in Table III. The best possible results obtained were those in trials Nos. 1, 2, 3, where the rate of combustion was 34.75 pounds of coal per square foot grate per hour, with 1.77 square feet heating surface per pound coal, the rate of total air supply being 18 pounds per pound coal, at a pressure of 0.338 inch water in the ash-pit, and a temperature of 261° Fahr. The area allowed for air direct to gas was $\frac{5}{34}$ of the total open space through grates, and the smoke lasted for five minutes. The water evaporated from and at 212° Fahr. was 10.74 pounds per pound coal, or an increase of 0.53 per cent. in favor of the heated blast.

In trials Nos. 4 and 5 the ratios of heating surface to coal were kept the same as in trials Nos. 1, 2, 3, but the rate of combustion was decreased from 34.75 to 30.38 by increasing the grate surface from 7.2 to 8.25 square feet and decreasing the pressure in the ash-pit from 0.338 to 0.24 inch water. The results were practically equal in efficiency to those of trials Nos. 1, 2, 3. Trials Nos. 6, 7 were carried out to compare with Nos. 15, 16, in Table III. The water evaporated per pound coal was 11.06 pounds from and at 212° Fahr., or 4.1 per cent. in favor of the heated blast.

In making the above comparisons between forced and natural draft, no allowance has been made for steam used in driving the fan to create the blast, which, when taken into account, will slightly reduce the percentage gain shown in favor of forced draft.

The chief points that seem to be indicated by Tables Nos. II, III, and IV are:

(1) That they bear out the natural draft, Table I, in this, that a very considerable area for air direct to the gases must be supplied to insure efficient combustion and reduce smoke.

(2) That in designing a grate for forced draft the ratio of open air space between fire-bars to total grate surface should be much less for forced than for natural draft.

(3) That a moderate air pressure of about 0.35 inch water in the ash-pit, giving a rate of combustion of about 35 pounds of coal per square foot of grate per hour seems more economical than greater air pressures with increased rates of combustion.

(4) That by the use of moderate forced blast a higher efficiency of combustion is obtainable than by using natural draft simply.

(5) That in order to make a commercial success of any arrangement for raising the temperature of the air for combustion by the waste heat of the escaping gases the heater would require to be very efficient and of small first cost and maintenance.

It seems strange that in the present state of keen competition so little effort is generally made to improve the design of the furnace. It is quite within the mark to say that, at the present moment, by far the greater number of marine-boiler furnaces have no provision whatever for burning the coal gas they generate, as the little air that is admitted direct above the grates is quite inadequate for the volume of gas generated from North Country coal, and is seldom even sufficient for the quantity that would be necessary for a coke fire. This is a matter of particular importance in this district, for by this fact Welsh steam coals, containing a smaller percentage of volatile combustible constituents, obtain an undue superiority. There seems a general concensus of opinion among engineers that a considerable reduction in consumption results from using best Welsh in place of best North Country coals. But the mean relative absolute evaporative value of the two can not be placed at a higher ratio than $\frac{15}{14.625}$, or 2.5 per cent. in favor of the Welsh; and I would here venture the opinion that a very appreciable fraction of the advantage usually claimed for Welsh coal is due to the fact that, as a rule in practice, just the same amount of air is admitted direct above the grates in both cases, whereas for North Country coal a considerably greater amount is necessary. It also appears (and the experiments seem to bear this out) that of the saving which has already been actually obtained in practice by the application of forced draft a considerable portion must be credited to the more enlightened methods of air introduction, which the advocates of this system have usually introduced when fitting their forced draft apparatus; and that the economy due to the forcing of the draft *per se* (namely, reduced air supply

and increased mean temperature between furnace and uptake giving more rapid transmission of heat through the plates) is not so considerable as it would seem when merely looked at in the general way. For instance, had a system of forced draft, giving results similar to those got in trial Nos. 3, 4, in Table III, been fitted to a boiler under natural draft similar to trials Nos. 1 and 2, Table I, the increase of efficiency would have been in the proportion of $\frac{10.67}{9.166}$, or a clear saving of 16.4 per cent. in favor of the forced draft; and had a system similar to that given in Table IV been adopted, the saving would have been $\frac{10.74}{9.66}$, or 17.1 per cent. in favor of heated forced draft, with the entering air raised to 261° Fahr. But when the natural draft results, as per trials Nos. 29, 30, 31, Table I, are taken as the basis of comparison, the relation between the two is for cold forced draft as $\frac{10.67}{10.25} = 4.1$ per cent. gain, and for heated forced draft as $\frac{10.74}{10.25} = 4.78$ per cent. gain.

It is certainly not intended to give the above as the best relative results that may be expected, as much better methods of applying forced draft probably are and certainly will be adopted; and it must not be forgotten that the boiler experimented upon was designed with a view to being used under natural draft only, and with more extended experience and a boiler got out especially for forced draft better results might be expected. Also, besides the small saving shown above, the principle of artificially forcing the combustion has several important bye-advantages: first, it renders the furnace practically independent of weather and climate, as the air necessary for full power evaporation is always at command, and many natural-draft marine boilers steam but poorly with a light following wind, under which circumstances the fires have to be unduly worked, causing considerable waste; also, a very cheap and inferior quality of coal can be burned effectually, and the boiler kept at full power; and, lastly, there ought to be some slight gain in increased speed of vessel, as steam can be maintained steadily by shutting the blast off from the fire during cleaning and increasing the air pressure to the other furnaces, which advantage appears quite tangible when we consider that most cargo boat engines have either to be linked up during cleaning fires or suffer a loss of pressure, and that sometimes it is nearly an hour before the pressure is fully regained, which, with six furnaces, and each fire cleaned once every twenty-four hours, means practically that the ship is worked at reduced power for 25 per cent. of her steaming time.

The following is an analysis of the coal used in these experiments:

Carbon	80.51
Hydrogen	4.24
Oxygen	8.16
Nitrogen	1.11
Sulphur	0.81
Ash	3.74
Water	1.43
	100.00
Coke	70.1
Volatile matters	29.9
	100.0
Calorific power; pounds of water evaporated from and at 212° Fahr., by 1 pound of the coal, as determined in Thompson's calorimeter	14.1
Calorific power; pounds of water evaporated from and at 212 deg. Fahr., by 1 pound of the coal, as determined by calculation	14.21

TABLE I.—*Results from natural-draft trials.*

No. of trial.	Height of barometer.	Temperature.				Grate.		Coal.		Square feet of heating surface per pound of coal per hour.	Water evaporated.			Air.							
														Opening above grate, square inches.							
		Atmosphere.	Feed water.	Air entering ash-pit.	Uptake.	Length.	Area, in square feet.	Pounds per hour.	Pounds per square foot of grate per hour.		Per pound of coal from temperature of feed.	Equivalent from and at 212°.	From and at 212° per square foot of heating surface.	Through furnace door.	At bottom of back bridge.	At top of bridge.	Total.	Opening through grate, square inches.	Ratio of direct opening to gas to opening through grate.	Cubic feet per pound of coal.	Pounds per pound of coal.
1	2	3	4	5	6	7	8	9	10	11	12	13	14	15	16	17	18	19	20	21	22
Mean of—																					
1, 2, 3 *	29.98	68.9	61.2	68.9	779	3′ 3″	14.625	256.6	17.54	1.73	7.735	9.166	5.27	0	0	0	0	875	0 : 875	162.3	12.25
4, 5, 6	30.27	70.5	61.0	70.5	815	3′ 3″	14.625	264.7	18.10	1.68	7.816	9.26	5.5	0	1.76	0	1.76	875	1 : 497	174.9	13.14
7, 8, 9	30.27	62.9	60.8	62.9	728	3′ 3″	14.625	261.4	17.87	1.70	7.897	9.36	5.48	0	4.4	0	4.4	875	1 : 199	182	13.8
10, 11, 12	30.18	72.2	61.5	72.2	768	3′ 3″	14.625	272.7	18.64	1.64	7.837	9.28	5.74	0	5.74	0	5.74	875	1 : 152	188	14.04
13, 14, 15	29.96	70.2	63.7	70.2	764	3′ 3″	14.625	272.7	18.64	1.64	8.03	9.46	5.78	3.96	5.74	0	9.7	875	1 : 90.	224.6	16.83
16, 17, 18	30.02	63.3	64.7	63.3	757	3′ 3″	14.625	276.0	18.81	1.62	8.152	9.62	5.95	6.44	5.74	0	12.18	875	1 : 71.8	218.6	16.59
19, 20, 21	30.13	70.7	64.7	70.7	775	3′ 3″	14.625	269.9	18.45	1.65	8.191	9.68	5.85	12.89	5.74	0	18.63	875	1 : 47	220.3	17.27
22, 23, 24	29.99	72.3	65.2	72.3	748	3′ 3″	14.625	271.3	18.55	1.64	8.47	10.01	6.07	21.82	5.74	0	27.56	875	1 : 31.7	243	18.17
25, 26, 27	29.90	72.3	65.3	72.3	788	3′ 3″	14.625	248.4	16.98	1.79	8.63	10.19	5.67	21.82	5.74	14.69	42.25	875	1 : 20.7	272.6	20.39
28 †	29.28	66.3	60.0	66.3	767	3′ 3″	14.625	256.0	17.50	1.74	8.71	10.33	5.93	21.82	5.74	14.69	42.25	945	1 : 22.4	229	17.35
29, 30, 31	29.82	61.5	59.2	61.5	701	3′ 3″	14.625	257.0	17.39	1.74	8.64	10.25	5.91	21.82	5.74	14.69	42.25	1015	1 : 24	243.3	18.46

* Uptake was several times full of flame.
† There were 29 bars, one-half inch thick, in each furnace, except in trial 28, when there were 27, and in trials 29, 30, 31, when there were 25.

TABLE II.—*Results with cold forced draft, and grates as shown in Figs. 1 and 2.*

No. of trial.	Height of barometer.	Temperature.				Grate.		Coal.		Square feet of heating surface per pound of coal per hour.	Water evaporated, pounds.			Air.										
		Atmosphere.	Feed water.	Air entering ash-pit.	Uptake.	Length.	Area, in square feet.	Pounds per hour.	Pounds per square foot of grate per hour.		Per pound of coal from temperature of feed.	Equivalent, from and at 212°.	From and at 212° per square foot of heating surface.	Opening above grate, square inches. Through furnace door.	Bottom of back bridge.	Top of bridge.	Total.	Opening through grate, square inches.	Ratio of direct opening to gas to opening through grate.	Pressure in inches of water. In inlet pipe.	In main duct.	In ash-pit.	Cubic feet per pound of coal.	Pounds per pound of coal.
1	2	3	4	5	6	7	8	9	10	11	12	13	14	15	16	17	18	19	20	21	22	23	24	25
Mean of—						*Ft. In.*																		
1, 2.....	30.19	75.3	63.7	75.3	1103	2 3	10.125	433	42.75	1.02	7.67	9.06	8.79	14.88	0	0	14.88	575	1:38.6	3.25	1.375	.....	251	18.63
3, 4.....	30.01	71.8	64.2	71.8	919	1 8	7.5	303	40.38	1.465	8.1	9.57	6.5	9.92	.88	2.45	13.25	412	1:31	3.25	1.375	.....	355	26.63
5.....	30.08	62.8	63.5	62.8	898	1 5	6.38	286	44.80	1.55	7.68	9.07	5.83	8.93	0	.61	9.54	337	1:35	3.25	1.375	.....	359	27.45
6.....	30.18	61.4	62	61.4	944	1 10	8.25	322	39	1.38	7.73	9.15	6.61	2.48	0	.61	3.09	462	1:149	2.625	1.000	.....	302	23.09
7, 8.....	29.96	56.9	61	56.9	872	1 10	8.25	257	31.12	1.73	7.96	9.43	5.44	2.48	0	.61	3.09	462	1:149	1.000	.625	.....	269	20.71
9, 10.....	29.93	65	59.2	65	934	2 3	10.125	302	29.84	1.47	7.92	9.39	6.37	3.47	0	.61	4.08	575	1:141	1.000	.625	.....	232	17.55

TABLE III.—*Results with cold forced draft, and grates as shown in Figs. 3 and 4.*

No. of trial.	Height of barometer.	Temperature.				Grate.		Coal.		Square feet of heating surface per pound of coal per hour.	Water evaporated, pounds.			Air.										
		Atmosphere.	Feed water.	Air entering ash-pit.	Uptake.	Length.	Area, in square feet.	Pounds per hour.	Pounds per square foot of grate per hour.		Per pound of coal from temperature of feed.	Equivalent, from and at 212°.	From and at 212° per square foot of heating surface.	Opening above grate, square inches. Through furnace door.	Bottom of back bridge.	Top of bridge.	Total.	Opening through grate, square inches.	Ratio of direct opening to gas to opening through grate.	Pressure in inches of water. In inlet pipe.	In main duct.	In ash-pit.	Cubic feet per pound of coal.	Pounds per pound of coal.
1	2	3	4	5	6	7	8	9	10	11	12	13	14	15	16	17	18	19	20	21	22	23	24	25
Mean of—						*Ft. In.*																		
1, 2.....	30.4	61.1	51	61.1	760	1 9	7.218	285	39.5	1.56	7.9	9.41	6.02	0	0	0	0	148.3	0	.875	.625	.4	225	17.1
3, 4.....	30.18	61.8	54	61.8	783	1 9	7.218	267	37	1.66	8.96	10.67	6.39	14.38	0	0	14.38	148.3	1:10.3	.937	.687	.4	267	20.3
5, 6, 7....	29.47	58.3	51	58.3	764	1 9	7.218	273	37.7	1.64	8.69	10.39	6.35	21.8	0	0	21.8	148.3	1: 6.8	1.00	.75	.4	266	20.35
8, 9.....	29.63	49	50	49	836	1 7½	6.8	315	46.3	1.41	8.34	9.95	7.05	16.86	0	0	16.86	139.7	1: 8.2	2.00	1.00	.75	283	22
10, 11....	30.08	60.8	53.5	60.8	834	2 3	9.28	337	36.3	1.32	7.8	9.3	7.02	21.8	0	0	21.8	190	1: 8.7	1.00	.75	.35	261	19.97
12, 13....	29.79	51.3	52.7	51.3	890	2 9	11.34	392	34.6	1.13	7.79	9.28	8.17	21.8	0	0	21.8	233.2	1:10.7	2.5	1.00	.35	254	19.76
14.....	29.83	48.2	48.5	48.2	739	1 5	5.83	277	47.5	1.60	8.65	10.35	6.44	11.9	0	0	11.9	119.5	1:10	1.66	.812	.66	281	21.86
15, 16....	29.33	58.2	53.7	58.2	741	1 6	6.18	228	36.8	1.95	8.94	10.65	5.43	21.8	0	0	21.8	126.7	1: 5.8	1.00	.75	.43	298	22.88
17, 18....	30.35	45.6	42.5	45.6	692	2 0	8.25	260	31.5	1.71	8.5	10.27	5.96	21.8	0	0	21.8	169.9	1: 7.8	.875	.677	.3	229	18

TABLE IV.—*Results with hot forced draft and grates, as shown in Figs. 3 and 4.*

1	2	3	4	5	6	7	8	9	10	11	12	13	14	15	16	17	18	19	20	21	22	23	24	25
Mean of—																								
1, 2, 3....	30.32	54.3	44.7	261	701	1 9	7.218	251	34.75	1.77	8.95	10.74	6.05	21.8	0	0	21.8	148.3	1: 6.8	.929	.699	.338	326	18
4, 5	30.47	48.6	45	256	719	2 0	8.25	251	30.38	1.78	8.88	10.66	6	21.8	0	0	21.8	169.9	1: 7.8	.875	.700	.240	303	16.85
6, 7.....	30.50	56.4	46	242	665	1 5	5.83	227	38.99	1.96	9.22	11.06	5.64	21.8	0	0	21.8	119.5	1: 5.5	1.025	.667	.438	351	19.9

VII.

THE PRESERVATION OF IRON SHIPS' BOTTOMS.*

By Lieut. SEATON SCHROEDER, U. S. N.

In adopting metal as a ship-building material, ship-owners accepted another contest with the forces of nature. Besides saving the wetted surface from being incrusted with barnacles and marine weeds, as with wooden ships, the fabric has to be preserved from gradual destruction.

The present state of knowledge concerning the corrosion of iron ships is the result of cumulative acquisition, partly due to experiment and study, and largely to the slow and easy process of absorption without effort. The tendency of iron to rust when exposed to dampness has been known from earlier ages than are usually quoted in studies of mechanical subjects. The peculiar nature of the action, or rather actions, has, however, only become known in comparatively recent times, and has been well described in certain professional publications.

The discovery of the chemical natures of the various rusts examined, and their separation into the various oxides containing differing proportions of metal and oxygen, formed one of the early steps in the study of the subject. Then was discerned the galvanic action of these oxides, and the acceleration by it of chemical reduction; and it appears now that this electric action is at the root of the evil. One fact may be stated as fundamental in the consideration of the destruction of iron: it, like all metals, is electro-positive to its own oxides. When a point of rust is formed, it and the uncorroded surface form a voltaic couple, accelerating further chemical action.

If a ship be kept in motion, the rust, which is soft and pulverulent on first being formed, is washed off by the passing water; and while more rust will continue to form, this will be less accelerated by voltaic action, and the work of destruction will proceed more slowly, than if the ship were at rest. It may be said in this connection that one reason of a ship's fouling less when kept under way is that marine animal and vegetable life cling most easily to the rusted parts of a metal sur-

* Thanks are due to the Harlan and Hollingsworth Company, Messrs. Peter Wright & Sons, Messrs. Boulton, Bliss & Dallett, and Mr. Charles W. Copeland for valuable information on this subject.

face, and that the washing away of the rust is what prevents their accumulation.

It has long been a recognized fact that pure water at ordinary temperatures has no chemical effect on iron. If combined air or carbonic acid be present, however, a series of reactions is inaugurated, culminating in the rusting of the entire surface. The acid, attacking the iron, forms a carbonate which, in turn, becomes oxidized, first, by the dissolved air, and afterwards by the decomposition of the water itself, and forms ferric oxide (rust), while the acid is liberated and free to attack a fresh surface. The knowledge of this action of carbonic acid has led to the use of lime and other alkalies to preserve iron or steel exposed to such action, as the lime absorbs the carbonic acid. As a familiar instance, lumps of lime have been used to a certain extent in iron vessels' bilges as an anti-corrosive agent, though, as a rule, it is not positive or powerful enough to be very effectual. For the interior of fresh (drinking) water tanks, the application of lime is also one of the best and most general methods of keeping the water free from rust.

As a rule, the greatest amount of oxidation is found near a vessel's water-line and in the vicinity of the stern-post and after deadwood. This is easily explained in the former case by the action of the waves leaving the skin alternately immersed and emersed, by which means a greater amount of oxygen is brought in contact with the metal. At the stern-post it may be accounted for by the amount of air sucked down by the action of the propeller, especially when a part of its revolution is in air, in consequence of pitching or of faulty design.

It has been argued that this increased oxidation at the water-line is also due to a special galvanic action. Becquerel demonstrated that a homogeneous metallic surface immersed in two layers of fluid constitutes a voltaic pile of one solid and two fluid elements; one end of the surface would therefore be in a positive state with respect to the other, and would corrode faster. Water (especially sea-water) and moist air would readily constitute the two fluid elements, and set up the current. It may perhaps be said that such action, while probably existing, would produce results of interest in a laboratory, but of no great interest when considered in connection with the case in point.

A peculiar feature in the rusting of iron surfaces is that the action always begins in points. This may often be attributed to the presence of particles of hammer scale (black magnetic oxide), left on the plate after passing in a heated state through the rolls. When exposed to the action of sea-water, which possesses great electro-chemical conductivity, this oxide will institute and maintain a galvanic action on the metal, which greatly accelerates its corrosion. The same feature is brought about, however, by other causes. The pressure at or near the surface of other foreign substances, such as graphite, bits of cinder, etc., to which the corroding agents find access, will inaugurate corrosion. Furthermore, mere differences in the superficial quality of contiguous parts of

the metal will start the ball rolling; the lack of chemical homogeneity is inborn in almost all plates, but in the purest iron, after being subjected to such incidental hammering, bending, heating, cooling, shearing, punching, riveting, etc., as naturally falls to the lot of a plate being shaped and worked into a ship's hull, there will be variations in the hardness of the surface which will inaugurate electro-chemical action, the harder parts being negative to the others.

What may be called the simple rusting of iron plates, such as is caused by the action of the combined oxygen and carbonic acid in the water, is the least dangerous to the vessel. It begins in points, but these spread and finally unite and cover the surface with a fine powdery rust, easily washed off. Another process, evidenced by rust cones, produces much graver injury, the cones frequently covering pitting one-sixteenth of an inch deep. The explanation of this action is very clearly given by Vivian B. Lewes, Esq., in a paper read before the Institution of Naval Architects, March 31, 1887:

Iron forms three well-defined compounds with oxygen—black magnetic oxide or mill scale; ferric oxide or rust; ferrous oxide. It is a recognized fact that the higher magnetic oxide of iron increases the corrosion of iron and steel by galvanic action, and it seems, therefore, probable that the ferric oxide would do the same; and in order to see if the other oxides behaved towards the metal in the same way as the magnetic oxide, under the exciting influence of sea-water, the following experiments were tried:

Some steel plates, 4 inches by 1 inch, were cut from the same sheet and were faced on one side; on the polished surface of one, a piece of thin blotting-paper was laid so as to entirely cover it and project one-half inch beyond its edges; this was wetted with sea-water, and the other plate, with its polished face downwards, was placed on the wet paper, so that the two polished steel faces were separated by the blotting-paper soaked with sea-water. Wires were then placed in contact with the dry backs of the plates, and fixed in position by a dry wooden clamp. On connecting this couple with a "Sir W. Thomson's Marine Reflecting Galvanometer," a deflection of 20 degrees on the scale was obtained. The upper plate was then raised, and its face having been smeared over with a thin paste of magnetic oxide mixed with sea-water, was replaced in position, giving a deflection of 112 degrees on the scale. The plates were then carefully cleaned and dried, fresh blotting-paper moistened with sea-water placed in position, and the upper plate smeared with hydrated ferric oxide and sea-water placed upon it; this gave a deflection of 65 degrees, whilst hydrated ferrous oxide (made by precipitation and washing with well-boiled sea-water in an atmosphere of coal gas) gave a deflection of only 25 degrees, or a very little more than the plates by themselves. Portions of a rust cone treated in the same way gave a deflection of 110 degrees.

Starting with these data, we can now explain the formation of rust cones and the resulting pitting of the plates. On the metal of our ship we have a small particle of moist rust, left there when the ship was last scraped, or else formed by a particle of some foreign metal or the perishing of the protective. The moist rust forms a galvanic couple with the iron and slowly decomposes the moisture, the oxygen oxidizing the iron, while the hydrogen gently pushes up the protective and anti-fouling coats, forming a small blister, the sea-water leaks in, an active galvanic current is produced, and the blister slowly fills with the result of that action—rust—and the continuation of the action gives us the large rust cones. This process being independent of the oxygen dissolved in the sea-water, and the amount of water present being small, the corrosion gives rise to the ferrous as well as the ferric oxide.

Having thus skillfully diagnosed the case, Mr. Lewes prescribes a treatment which is given further on.

As the demands of consumers became more and more imperative for a metal better adapted to constructive purposes, the producers were somewhat suddenly impelled to bridge the vaguely-defined zone existing between so-called steel and iron in its purer form, and ship-builders have found at their disposal a metal whose qualities have rendered possible a notable decrease in weight. By a seeming paradox this improvement in the quality of material has apparently been attended with increased danger to the fabric. The reduced scantlings which are rendered possible by increased strength and ductility, and which are allowed by the insurance companies and other professional opinion, necessitate more care in the protection of steel vessels than of the older iron ones. It has been stated as a curious fact that not only is the effect of corrosion *comparatively* more injurious to the ship when lighter scantlings are used, but that oxidation takes place *positively* more rapidly in small than in large scantlings. Fifty years ago this was demonstrated by Mr. Mallet to be the case in castings, but whether or not it holds good in modern rolled homogeneous iron is perhaps a question.

Agitation has also been caused by the conflicting statements of different observers and experimenters regarding the relative rapidity and localization of corrosion in steel and wrought-iron. Allusion has been made above to the fact of plates beginning to rust in spots which then spread; it is in the degree of this spreading that is noticed, perhaps, the main difference in the process of oxidation of iron and steel; in the latter, the action has been found to be more local, and, granting the total amount to be approximately the same, it results in the deeper injury known as "pitting." In the consideration of the effect produced by the small galvanic couples, formed by contiguous parts of a plate possessing different physical and chemical qualities, it is also to be noted that the chief distinguishing property of steel, that of being hardened by sudden cooling, causes it to suffer in this respect as compared with wrought-iron, as sudden local coolings, such as are frequently unavoidable, produce marked variabilities in hardness.

The mutual electric action of particles of steel or of iron of different characteristics naturally increases with the amount of such variation and is most noticeable when the two metals are used in contiguity with one another. In this connection a question arises which has occupied the attention of ship-builders since the introduction of steel plates, viz., the use of iron or steel rivets. When hand riveting is used, the hammering of necessity changes the character of the metal of the rivet end, hardening it, so that if the same steel were used in making the rivet as in making the plate, in the finished ship they would be very different, and, apart from other constructional results, the rivet end being harder than the circumjacent plate, the latter becomes the electro-positive ele-

ment and wears away. The calking of seams and butts has an analogous effect, the edges of the plate becoming harder, with consequent detriment to the neighboring softer parts; this is what causes the lines that will often be found marking such places.

No definitive statement can yet be made regarding the average relative amount of corrosion actually experienced in service by iron and steel ship plates. In recent decades the quality not only of steel, but of rolled iron, has undergone such improvement in the matter of mechanical and chemical homogeneity, that researches made fifty years ago are not honored with the same respect as those made with the metals of to-day and conducted in the light of newly-discovered laws. Some experiments made in 1877 by Sergius Kerns, of Saint Petersburgh, are of value from the care with which they were conducted.

The plates were immersed in sea-water for thirty days, and the loss of weight carefully determined, with the results given in the following tables, which are transcribed from Mr. Lewes's paper quoted above:

Action of 100 *litres of sea-water* (*sp. grav.* 1.027), *on one square metre of iron and steel one-eighth inch in thickness.*

Iron.	Loss in grams.	Steel.	Loss in grams.
I.....	25.78	I.....	22.75
II.....	25.54	II.....	22.34
III.....	26.04	III.....	21.83
IV.....	27.44	IV.....	21.96

This shows a difference of 4 grams in favor of steel.

On the other hand some experiments conducted in 1881 by Mr. William Parker, chief engineer surveyor of Lloyds' register, resulted in a verdict slightly against steel, the absolute losses in cold sea water (at Brighton) in pounds per square foot of bright surface, per annum, being as follows:

Common iron, mean ..... .163
Best iron, mean ..... .195
Mild steel, mean ..... .207

According to Kern's experiments, therefore, the excess of loss of iron over steel was about .01 pound per square foot per year, while according to Parker there was practically the same difference in favor of iron. The latter experiments being carried on over a greater period of time (four hundred and fifty-five days), and in the unconfined sea, partake less of the nature of laboratory experiments, and are apparently of greater value. But in either case it will be seen that the difference is slight, .01 pound difference of loss in weight, indicating a difference in average loss in thickness of .004 inch. So far as bright plates are concerned, therefore, there will probably be no dissension from Mr. Parker's opinion that the effect "has not been to raise any apprehension that

steel boilers or steel ships are likely in the future to corrode to any serious extent more rapidly than iron."

In practice bright plates are not known. It has long been noticed that whatever process be adopted to remove the rust from iron bottoms, protective compositions never give such good results on a new bottom as on one that has been in the water, or that has been exposed to the air for some time before painting. This may be explained by the fact that forge scale, formed at a high temperature and left on the rolled plate, is much richer in oxygen than the ferric oxide which forms the basis of rust, and, in the course of the chemical and galvanic reactions between it, when moist, and the iron, it loses a portion of that oxygen and becomes converted into the friable rust which is more perfectly removed by scraping or brushing. This points to a certain advantage in building in the open air, which practice, in the days of wooden ships, was a reproach to private as compared with Government shipyards.

The exposure of the plates, while to a certain extent effectual and in general practice when dealing with iron, does not suffice for the protection of steel. The presence of forge scale is much more injurious to the latter. The degree of this injuriousness may be inferred from a communication addressed by the British Admiralty in 1881 to the superintendents of dock-yards, in which it is stated that—

> Experiments made at Portsmouth and elsewhere have shown that the black oxide, or scale, or bloom on steel plates and angles is electrically so highly negative to the steel itself, that it acts on steel much in the same way that copper does.

In the same year the practice was adopted in England of "pickling" steel plates, that is, of immersing them for a few hours in a bath of dilute hydrochloric acid; the acid partially dissolves the scale and partially loosens it for removal by brushing. This practice has become general among steel-ship builders, but the treatment requires thorough measures to be taken afterwards to kill or remove the acid after the accomplishment of its initial purpose. Immersion in a bath of lime water or some other alkaline solution kills the acid satisfactorily, but a more general plan is to subject the plates to a machine wire brushing at the same time that it is copiously drenched with fresh water; the plates issue from this treatment as bright as silver, and subsequent exposure to the air only causes the formation of red rust, which is easily brushed away before painting.

Before the successful manufacture of steel propellers, the bronze ones were a fruitful source of injury to iron hulls; and this was stopped only by placing a zinc band around the shaft, which, by confining the galvanic action, protected the hull until it was itself destroyed. The tables are now turned, and steel screws, if used in a coppered ship, would themselves have to be protected perhaps in the same way.

The unfortunate tendency of iron to corrode produces its effect as well upon the interior as the exterior of a ship, and under circumstances far more conducive to destruction of the metal. Among the causes

strongly promotive of internal damage may be mentioned the washing about of the bilge water, leaving the frames and skin alternately wet and dry; the various ingredients contained in the bilge water, brought by drippings from brass and copper about the engines, and frequently from the cargo; the chemical action of cargoes themselves when in contact with the skin; the higher temperature usually existing, especially in the boiler and engine-room compartments; lack of care. The last cause is more potent in its results than all the others combined, and doubly worthy of notice from its occurring (until lately) as frequently on the part of the builders as of the keepers. The way it was evinced by the former was in not fashioning the structural arrangements so that all parts should be accessible; with the interior of a ship properly fitted to be opened up, cases of serious corrosion are not apt to occur where proper care is manifested. Periodical inspections can be made without the conveniences and expense of a dock, and cleaning and painting are easily done; and yet, in consequence of the necessity for so doing not being understood, there have been many instances of vessels lost by corrosion from within, while it is difficult to find a well authenticated case of this resulting from the skin being wasted through from the outside.

The most celebrated case of loss from internal corrosion is that of the British troop-ship *Megæra*, which had to be beached on the island of St. Paul in 1871. The necessity for doing so arose from a hole eaten through one of the plates of the bottom immediately under the coal-bunkers, coupled with the fact that the plates in the vicinity were worn so thin, that they bent like tin under slight presence. After carefully sifting the vast amount of evidence collected and digested by the commission created to investigate the circumstances, it may be said that the disaster was due wholly to the presence of a strengthening plate on top of the frames, which were only 12 inches apart, and a vertical, intercostal wash-plate between them, which prevented all possible access to that part of the bilge. As a consequence, that part of the bottom had not been examined from within for over six years, during which time the bilge water had had free access to it, with all the evil effects now known to follow. The minutes of evidence also showed that some time before that last cruise the bunker bulkheads had been scaled from within, and that the hammering had inevitably detached pieces of scale from the bunker lining, causing them to drop right down into the inclosed space where they could not be seen, and from which they would at best be very slowly removed by the water washing in and out through the narrow slit left in the vertical wash-plate.

Some owners have been quick to find out that more attention is needed in the engine-rooms and bunkers than elsewhere in their ships, and the discovery of the fact led to study of the causes. Apart from the powerful action of engine-room bilge water, iron rusts much faster in warm, damp air than at ordinary temperatures; in the bunkers there

enters the additional fact that carbon is electro-negative to iron in sea-water, and its mere presence therefore increases the rate of corrosion; furthermore, all coal contains a greater or less amount of impurities, especially sulphur, which, in combination with moisture, produces highly corrosive solutions.

Rust begets rust; it does not protect the iron underneath, but must be removed as soon as detected. A remarkable instance of ignorance and misdirected care, leading to serious deterioration in the interior of a vessel, occurred in the steamer *Dessoug*, afterwards bought from the Egyptian Government to bring Cleopatra's Needle to America. A preliminary inspection of the plating showed that it had apparently not been neglected, a good coat of red lead covering the greater part of the surface; on sounding about with a scaling hammer, however, a very different state of things was revealed, immense quantities of rusty flakes coming shivering down at nearly every tap of the hammer. An old employé of the arsenal, on being questioned, replied that a considerable amount of care had been bestowed upon the vessel, and that whenever those large blisters were noticed, they had been painted over to help preserve the iron behind. Twelve tons of rust were sent out of that ship.

Lumps of lime scattered about the bilges will, to a certain extent, neutralize the dangerous acids in the bilge-water; but this can not be considered a reliable preventive of corrosion. Mineral paint will last but a short time, and when it has to be renewed it is almost impossible to get the surfaces dry and in proper condition for painting, especially in the middle and after compartments.

Many patent cements have been devised in the last quarter of a century for coating the interior of ships' bottoms, but most of them are valueless. At the time of the loss of the *Megæra*, Portland cement, with or without an admixture of sand, had been largely used for some time, but was not as universal as it has since become. Drying into a stony mass, it presents a hard surface, protecting the iron from abrasion, and is sufficiently impervious to water for all practical purposes. It is just as necessary that a close adherence should be obtained between it and the metal as in the case of other protectives, but under the circumstances usually attendant, this is much easier to do than with paints or varnishes. The slightest dampness will prevent the latter from sticking, and will start rust underneath; with cement, while much moisture is undesirable, the presence of a certain amount is of no consequence, the cement itself being mixed with water. The plating should be swept clean and preferably unpainted, as this tends to prevent close adherence; there have been cases, however, where on the cement being lifted after a service of 20 years, the red lead surface beneath was found to be in a perfect state of preservation.

The objections that have been urged against cement are that it hides the surface thus protected from observation, and that the corrosion

would be rapid when set up in any space where the union might not be perfect. But the interior skin thus coated can not really be considered as having a hidden surface, because the adherence, easily obtained in practice, is such that the cement really becomes the inner skin of the ship. Also, it would not be fatal to the ship if the iron were to corrode through, owing to the stanchness of the cement. In 1876 a hole suddenly appeared in the engine compartment of the U. S. S. *Gettysburg*, in the first year of her cruise; others soon followed, and it was found that the skin was in many places very much reduced in thickness, being only one-eighth inch in some places, and that the holes were due to internal corrosion, as in the *Megæra*. On reaching port and a dock, a number of patches were put on, and the whole ship was cemented, and completed her three years' cruise on that false bottom. If they had had a barrel of cement on board the *Megæra* she could probably have continued her voyage to Australia.

The usual practice now is to cover the bottom skin with the cement, putting it on thick enough to bring it up flush with the bottoms of the limber holes, and carrying it up on the turn of the bilge in the wings as high as is necessary to protect the plating from contact with bilge-water. There is just now being tried, and with good prospect of success, Stockholm tar and Portland cement. The tar is applied in a thick coat, and its surface covered with as much cement flour as it will take. The two seem to combine and harden in a manner to give very good protection.

Solid ceiling is usually carried up as high as the cement goes; it should be made perfectly tight, with the exception of two strakes immediately over the limbers. In the wings, solid ceiling is objectionable as confining the air about the iron, concealing the iron, delaying wholesale scaling and painting, and preventing occasional touching up. An open-work slatting above the cement is therefore preferable when it can be adopted; this is not the case where the cargo is carried in bulk, but then it is better to have it next to the skin, and have that open to examination after each voyage than to have solid ceiling interposed.

With a good coat of cement up to the turn of the bilge, and good lead or iron paint above that, no ship, if cared for at all, is likely to suffer from within. On the outside, the case is different, the problem being complicated by the "fouling" of the immersed surface.

The practice of sheathing wooden ships was in vogue in the days of Archimedes. Yet, at the opening of the 18th century the practice was not being carried out; ships had to be constantly hove down and cleaned and tallowed; and in 1728 a patent was granted in England for doing what had been done twenty centuries before, viz., covering the bottoms of wooden ships with sheets of copper, lead, and other metals. This reinvented method of keeping bottoms clean received no encouragement for a long time, but by the end of the century it may be said to have

become universal in naval, and frequent in private vessels, copper being the metal that proved most efficient.

The problem was solved for wooden vessels, but the difficulty re-appeared with iron, and has by no means been overcome, although the evil has been mitigated. A clean piece of metal appears to afford no foothold for marine life, whether animal or vegetable, but to rust or to paint the germs can adhere, and they quickly cover the surface. The perplexities of the situation are increased by the fact that the best means for preventing one action are apt to superinduce the other; many processes for diminishing the fouling are attended with positive danger to the fabric from accelerated corrosion due to them. Iron labors under the great disadvantage of standing very low in the galvanic scale in sea-water, and it is therefore acted upon injuriously by metals whose aid might otherwise safely be invoked to keep vessels' bottoms free from barnacles, weeds, etc. Copper sheathing kept the wooden ships clean, but copper and iron will not live together in amity.

The means used for protecting a ship's bottom from the various processes that attack it are divisible in two general classes. In one may be included all paints, varnishes, greases, or compositions of any kind placed directly upon the iron. Their name is legion, and a vast majority are either useless or highly destructive to the iron in consequence of being concocted in defiance of the laws of nature. In the other class may be grouped the various methods of sheathing the hull with plates of a non-fouling material, separated from it, if necessary, by a non-conducting substance. This solution of the problem involves generally great care in its mechanical execution, which care, however, is concentrated during the building and is saved to a great extent in service.

To many of the innumerable chemists and others who have devised and patented anti-corrosive and anti-fouling compositions, the long-known attribute of copper of remaining clean, or partially so, when immersed in sea-water has presented an irresistible charm. As a consequence, sulphates, arsenites, chlorides, oxides of copper have been brought forward in different forms, reliance being placed on their insulation from the iron by the oil or varnish in which they are enveloped. The danger arising from such combinations has led to the abandonment of that metal by some manufacturers, and to the adoption of neutral or electro-positive materials. Others have contented themselves with first coating the hull with a "protective" composition, to prevent the iron from corroding and to help insulate it from the metallic substances contained in the outer coating; and these have apparently met with a certain amount of success, as ships have been coated and re-coated in that way without (as a rule) visible signs of dangerous action after a number of years. Finally a few others have maintained that as oxides are non-conductors, therefore the oxidation of copper in a protective paint would not convert the ship into a galvanic battery.

Paints and varnishes differ essentially in their chemical nature. The

drying of the former is brought about by the oxidation of the oil, and this oxidation, if continued, results in the gradual decomposition of the paint. Varnishes, on the other hand, may be made with good, sound gums, which, after hardening by the volatilization of their solvents, do not oxidize by exposure to air or water, and may therefore be made more durable than paints.

An apprehension of this, taken in connection with the differing desiderata of "protectives" and "anti-foulers," has led to a successive application of different compositions, the one next to the iron being frequently a varnish, and the one next to the sea a paint whose property of gradual decomposition is enhanced by the incorporation of some metallic salt known to exfoliate or wear rapidly, thus presenting an ever-changing surface to which the zoophytes can not attach themselves. In the case of copper, as in Hay's oxide and McInnes's sulphate, the theory is that by the action of the sea-water, oxy-chlorides are formed which are immediately dissolved and removed by the water. In opposition to this, it is contended by many physicists that that salt would undergo such decomposition before being washed off as to lead to the deposition of metallic copper. The well-known injury which would result to any part of the plating from which the protective varnish had been worn, constitutes the *gravamen* of that objection. In still more open defiance, Walsh's method was to actually place a thin coating of infinitesimally-divided metallic copper on a layer of hard cement covering the iron. This, by presenting pure copper to the action of the water, probably obtained the maximum freedom from fouling, but the cement is said to have produced a surface as rough as that of hewn granite, reducing the vessel's speed materially. Walch also used copper dust on a bituminous coating.

Almost every known substance, from quicksilver to cow-dung, has been tried as an anti-fouler, and the following mixture is quoted to illustrate the ingenuity brought to bear on the subject: Sugar, muriate of zinc, wax, soap, calcareous stones, phosphate of soda, sulphate of zinc and copper, and the sirup of potatoes, or sugar with powdered marble, quartz, or felspar.

Many years ago the general impression was that the property of copper keeping clean was due to the fact that it was poisonous to both animal and vegetable life; but observation and experiment have tended to controvert or modify that theory. While the researches of Mr. Mallet, supplemented by those of M. Bouchardat, in 1840 to 1843, showed that some of the salts of copper are deleterious to the lower forms of animal life, such as render ships foul, the proportionate part of the general result due to physicking seems to be very slight. The mere fact of a coppered ship fouling under certain conditions shows that the poisonous nature of the surface is not sufficient to account for its immunity under other conditions; and coppery oysters, so injurious to innocent consumers, are in themselves apparently quite healthy.

Patent records contain many anti-fouling prescriptions to poison the zoophytes; strychnine and various purgatives have been suggested and possibly tried, but salts of copper, arsenic, and mercury have been the most prominent, and one of the last-named seems to have been very successful as applied to the U. S. S. *Ranger* and other vessels. This is the Marine Germicide Paint, the effective base of which is mercurous chloride (calomel). This salt is insoluble in fresh water, but when immersed in sea-water slowly takes an additional equivalent of chlorine, and is converted into mercuric chloride (corrosive sublimate), which is soluble, and is washed off particle by particle as it forms. The success that has attended the trials of this paint so far is attributed by the manufacturers to its intensely poisonous nature and power of destroying germ life, and not to its solubility, except so far as solubility is necessary to promote destructiveness of life. As a protective, mercury is a preserver of iron, and in this germicide paint it is intimately mixed with a proper proportion of oil, gums, and pigments to give it the required consistency.

The old stand-by, red lead, has been pronounced by no less an authority than Mr. Mallet, supported by the experiments of Mr. Jouvin, of the French navy, to be not only the most perishable of oil paints, but actually injurious to the surface it is intended to protect, because metallic lead is deposited in crystals, which act galvanically upon the iron. This impugns the past and present practice of a large majority of ship-owners of all countries, and has been answered by Mr. Barnaby to the effect that experiments carried on by him have proved that this action, while very considerable at first, soon lessens and eventually nearly ceases. Farthermore, the lead does not seem to be reducible to a metallic state when properly mixed with oil; if the oxide be in great excess over the vehicle, as in red-lead putty, the chemical action will apparently be set up with the effect described by Mr. Mallet.

The experience of ship-owners has not been such as to cause them to give up this paint, either for inside or outside work. Messrs. Peter Wright & Sons, Philadelphia, state in regard to it:

> On steel vessels, internally from the water-line down to the bottom cement, we find the reliable protective life of the best red-lead paint, which seems to excel all others in protective qualities, not to exceed from two and one-half to three years. On iron we find good red lead to have a long and indefinite life.

This difference in the rate of decomposition, when applied to iron and steel surfaces, is not devoid of interest, and indicates that a chemical action does take place. A certain amount of white lead or putty is usually mixed with the red lead to give a uniform consistency.

In comparatively recent years two other oxides have been coming to the front as efficient protectives of iron, those of iron and of zinc. The former gives a brown paint of handsome appearance and of considerable solidity and power of adherence, and which appears to be an admirable covering for iron-work exposed to air or to such dampness as may exist in the interior of ships. Whether or not the oil effectually in-

sulates it and prevents the galvanic action liable to be set up between the oxide and its elementary metal when in sea-water has not yet been decided by experience long enough to be of great value. On the Red Star steel steamers it is put on as a protective, with an outer green paint (McInnes's sulphate of copper) as the anti-fouling and anti-frictional. In this combination, it would seem that so long as the insulation of the hull remains intact, the green paint, by renewing the electric state of the oxide, would save the hull from its effects, while the latter having a good body would in turn protect the hull for a considerable time from the attack of the copper; also, the copper being less strongly electro-negative to the oxide of iron than to the iron itself, its wasting would not be checked to such an extent as to cause it to foul (see page 279, Protection of Copper.)

With age, these brown paints, getting lighter in color, come to resemble rust, and are therefore open to the objection of concealing it. But it will be noticed that when they have attained this age and dusty color their appearance is affected by moisture, and when wet they are in marked contrast with the rust, the presence of which is therefore instantly revealed. A paint of this nature was tried on the iron waterways and bulwark butt-straps of the U. S. S. *Pinta* in 1874; when it had become somewhat worn it presented the feature just described; when dry it and the rusty places all looked alike, but when wet in the morning watch or in showers, the latter showed plainly.

The use of the oxide of zinc in paints for ships' bottoms is attended with many attractive results. Ever since the researches of Sir Humphrey Davy, the preservative power of this metal has been recognized, and attempts have been made to utilize it as a pigment. When several metals are together and exposed to the action of an electrically conductive fluid, such as sea-water, the one that is most highly electro-positive will protect the others from the action of that which is most highly electro-negative. In this way a coating of zinc on iron would prove a perfect temporary preservative against an outside coat of copper paint; but this would be at the expense of its own life, and it would last but a short time if immediately exposed to such powerful galvanic action.

Regarded as an anti-fouler, zinc oxide apparently suffers in comparison with salts of copper in that it is very difficultly soluble in sea-water, and, therefore, under ordinary circumstances is washed away too slowly to prevent the surface becoming foul. The fact that in practice it does not seem to suffer in that comparison when on iron hulls can best be ascribed to the electro-chemical action of the hull only separated from it by the paint oil. This action is touched upon farther on.

Among the most comprehensive and careful paint tests that have been made are those that were carried on by the United States Naval Advisory Board in 1883–84, and a second series finished in 1885–86 by the Bureau of Construction. The test plates were of steel of the same quality as that used in the vessels that were building, and were 4 feet

square, weighing 5 pounds per square foot. Each one was immersed in a bath of one part of sulphuric acid and eight of water, then carefully cleaned, dried, weighed, painted with a sample of paint, and weighed again. Twenty-eight samples of paint were received. Eight plates were covered with each kind, and were sunk at Portsmouth, N. H., Norfolk, Va., Washington, D. C., and Key West, Fla., two at each place, care being taken to prevent any galvanic action. In addition, the iron-tug *Speedwell* was also carefully scraped, cleaned, and painted in sections with the various samples.

After about eight months' immersion the plates were examined, and the Board concluded that the paint presented by P. G. West was the best, and that presented by the Gould Elastic Paint Company was next in order of merit. The composition of the former is a secret; it is claimed to be both anti-corrosive and anti-fouling, and is said to adhere quickly and firmly to steel surfaces. Several Government vessels have been coated with it.

In the second series of tests over fifty kinds of paint were tried under similar conditions, and the attention of the Bureau having been called to the comparatively good results obtained with red lead and white zinc on the bottom of the U. S. Fish Commission steamer *Albatross*, that compound was tried on the *Speedwell*, as also zinc alone. The result was that the latter carried the day over any of the patented or secret processes, and a mixture of red lead and white zinc has been adopted for the present by the Navy Department. Many private firms use the same.

One of the latest contributions to the literature of the subject of protecting iron is Mr. Lewes's suggestion for a protective paint in his paper already quoted. After explaining the processes of corrosion, as given above, he says:

> From what I know of protectives, and from the facts I have brought before you, there is little doubt in my mind that the protective composition of the future will . . . . . be made by dissolving a good sound gum, not easily perished by sea-water, in a volatile solvent, care being taken that neither gum nor solvent give rise to organic acids; and body will be given to this varnish by finely divided metallic zinc, which can now be obtained in so fine a powder that it can be readily used as a pigment, and will give as good a body as oxide of iron can do.
>
> Now, in such a protective the varnish will act for many months, as in the case of many of our present compositions, and when in time the varnish perishes, as it must do from the action of sea-water under pressure, then the zinc will set up galvanic action, and will prevent the corrosion of the iron by being itself the substance corroded, and the zinc oxide so formed will form a layer under the anti-fouling, and continue protecting the metal as well as many of the protectives we have in use.

The correctness of the principles involved in this suggestion seems beyond question.

The attribute possessed by zinc of saving iron from corrosion has led to the trial of another method of applying it, usually known by the misleading term "galvanizing." This process has been in more or less general use for half a century, to protect iron from the effects of ordi-

nary dampness, and was proposed a quarter of a century ago for ships' plates. It does not seem to have gained much favor, however, until the recent extraordinary development of torpedo-boats. The very slight scantling allowed these craft made it imperative to test every possible way of delaying their destruction, and the plan of zincing their under-water frames and plates was tried and soon generally adopted, as also for vessels of the *Scout* and other fast types. This did not prove to be the wonderful panacea that was expected, and there has been occasion to quote Mr. Mallet in his report to the British Association in 1843, where he states, "In about two years nearly the whole of the thin coat of zinc is oxidized and removed, even in fresh water, and in less time in sea-water." Another disadvantage is that paint will not stick well to a zinced surface under the most favorable conditions, and much less so, to immersed surfaces vibrating from the development of high engine power, coupled with excessive liveliness of motion among the waves.

While most of the anti-foulers that have been invented are compounded with metal pigments, there are certain others, non-metallic, that command attention. Prominent among these in point of age and general use is the Peacock paint, the composition of which is not generally known, except that the ingredients were arrived at from study and analysis of the skins, scales, and slime of fishes. The discoverer of this preparation was led to give up the use of metallic oxides as being either dangerous or useless, and aimed at duplicating the mucous substance secreted by living, undiseased fishes, which prevents their becoming incrusted with barnacles. In this a certain success appears to have been attained, the limit perhaps being that the ship, unlike the fish, can not renew the slimy deposit without docking. It certainly possesses the merit of not constituting a standing menace to the integrity of the hull.

From the far east comes another invention apparently full of promise in this line. A Japanese named Hotta has produced a lacquer for application to ships' bottoms which has done well under trial, and has been applied to one or two ships. It is the same Japanese lacquer that is seen on articles of every-day use, with the exception that it dries in the open air, while the ordinary lacquer has to be hardened in a damp closet; therein lies the invention and the secret. The iron-clad *Foosoo* was painted in June, 1886, with alternate sections of this lacquer and red lead, and on examination a year later it was found that the lead had not protected the iron from corrosion, while the former had fouled slightly but preserved the hull perfectly, and after the removal of the few barnacles it was found to be intact, with a smooth, glossy surface. Last November it was applied to the Russian cruiser *Dimitri Donskoi*, and the result will be watched with much interest. This lacquer is poisonous (to the human system), but as it is not soluble, that characteristic can not alone account for its anti-fouling properties.

Not the least remarkable attribute claimed for this new compound is its apparently perfect galvanic non-conductivity. Two pieces of ordinary iron plate coated with it were placed on either side of a plate of copper, and sunk in Yokosuka harbor for three months, at the end of which time the plates were found to be in the same condition as before. It has lately been reported that the Japanese Government has finally decided to coat the bottoms of all their iron ships with lacquer.

It is perhaps unfortunate that discoverers of new compositions naturally resort as a rule to the patent offices for such protection as will make their inventions inure to their benefit. As a consequence, the talents (in some cases) which guided successful study are afterwards employed wholly to prove (against any odds and all reason) the superiority of the one or the other, and to decry the compounds proposed by rival chemists and manufacturers. And it is astonishing to note the overwhelming mass of evidence brought forward to prove the superiority of each one of the two or three more prominent patented or secret mixtures. For one and all it may be said that they are palliatives at best, and the rivalry between them is simply in the lengthening of the still short intervals between necessary dockings. Periodical visits to fresh-water ports will extend the limits to twelve months, but as a rule iron ships have to be taken out of the water twice a year, at intervals usually of five and seven months, the former including the spring or germ season and summer.

All known paints and varnishes are full of microscopic pores through which rusting is bound to take place. If several coats be superposed under favorable circumstances of warmth and dryness, the total area of these pores is diminished, but the covering is never absolutely impervious, and any long stay in sea-water is dangerous, whether the vessel be foul or not. The imperfection of paint as a water-excluding substance is further increased by the impracticability of having the work of scraping and repainting done properly. The expense and discomfort attendant upon a prolonged stay out of water co-operate to hurry the work at the expense of thoroughness. Nothing is more fatal to the efficiency of a coat of paint than that it should be applied to a wet surface; and yet a light shower of rain will rarely cause a suspension in the work of painting (if done by contract, particularly). A change even in the temperature of the hull from internal causes will sometimes make the skin "sweat" if the air of the dock be damp, and afterwards the paint can be torn off in long, soft strips, having effected no union with the iron whatever. Under the most favorable circumstances the mere problem of securing the adhesion of paint to a smooth steel surface has appeared so serious that rough-rolling the plates has been thought of as a means of obviating the difficulty.

Fortunately, fouling is a tangible economic question. The necessity of removing the weeds and barnacles that would reduce the vessel's speed, leads to renewing the protective paint oftener than would other-

wise be the case. Without that constant reminder, it is easy to see how docking vessels, especially tramps, might be frequently deferred and deferred until the cumulative results of such postponements might culminate in disaster.

The problem of protecting hulls by an insulated metal sheathing introduces very different mechanical questions, which, however, have been satisfactorily solved. In consequence of having been in general use for many years on wooden bottoms, copper was at first accepted by common consent as the metal best adapted to the purpose, and wood was pitched upon as a convenient and efficient insulator.

Copper is the one metal (among those to be considered in this connection) which, if not interfered with, oxidizes in sea-water with practically perfect uniformity all over the exposed surface. This is what constitutes its great excellence as an anti-fouler, as the salt formed so regularly and constantly is washed off by the passing water, and the animals and plants are prevented from attaching themselves. The usual term applied to this unremitting process is exfoliation, which, while perhaps not absolutely correct, seems to be as nearly so as any other single expression, and more convenient. The term would indicate an action mainly mechanical in its character, while it is in point of fact mainly chemical, the metal really coming off in an oxide formed by the sea-water. If the vessel be constantly in motion, the removal and formation continue uninterruptedly; if kept at rest, the oxide not being so freely removed will practically protect the metal from further action, and the oxidation will be carried on very much less vigorously; under these circumstances the germs of life, if abounding in the water, will gain a foothold, and the vessel will foul.

There is another condition favorable to the accumulation of barnacles, etc. on a coppered bottom, and that is a condition of galvanic connection with another metal to which it is electro-positive. In the early part of the century Sir Humphrey Davy undertook an investigation of the mutual action of sea-water and copper and the best mode of preserving the latter from too rapid waste. In the course of these investigations, having ascertained that chemical affinities are altered by changes in the electric state of bodies, he conceived the idea and established by experiment the fact that as copper can be acted upon by sea-water only when in a positive state it would be protected from corrosion if it could be rendered slightly negative. This was easily done by the presence of iron or zinc, and as copper is very weakly positive it took an amazingly small surface of the other metals to reverse its polarity. This established the electro-chemical character of the wasting of copper sheathing, and indicated an easy means of stopping or retarding it. Protective slabs of iron were placed about different parts of coppered hulls, and the object was attained of saving the copper, but at the cost of its fouling, as it is the wearing away of its surface that keeps it clean. The protectors, therefore, had to be discarded and reliance

placed upon the quality of the metal. It is related that when the *Victory* was repaired in 1857 her old copper was again replaced, although it had been in service thirty years.

In the discussions that take place regarding the relative excellence of a wood and copper sheathing and of paint, cases have been cited of the copper fouling to an extent equal, it was claimed, to that of iron. It has never been claimed that this was as often the case as with iron hulls, but the existence of such cases has a bearing upon the determination of the question. The most natural reason to assign is that the amount of life in the water was so great that the exfoliation of the surface was not rapid enough to prevent its adhering. Davy's experiments suggest a different cause. It seems possible that the abnormal fouling may have been due to some accidental and unintended "protection," and that such protection may have been afforded by and at the cost of some important piece of iron-work, such as a propeller, or a chain-plate, or a bolt. In an iron or composite vessel, such fouling of the copper might be regarded as an evidence of electro-chemical action possibly not devoid of danger.

The use of the term "coppering" is not restricted to the application of that metal alone, but also of its alloys. Mr. Mallet stated in his second report to the British Association (1840) that the alloy of no action, or that which in presence of iron and a solvent would neither accelerate nor retard its solution, was between the proportions of 17 Zn and 8 Cu and 18 Zn and 8 Cu, or, approximately, two parts of zinc to one of copper; and the atomic weight of zinc and copper being respectively 65.2 and 63.5, or nearly equal, the formula still holds good when expressed in the equivalents of the reconstructed chemistry of to-day. Whether or not that be the exact constitution of a neutral metal, it is difficult to foretell what success may be achieved in the incorporation of such a compound, or in its subsequent rolling into sheets. And what is still more problematical is whether or not it would keep clean under water; if the rate of exfoliation were not sufficiently rapid, it could not be accelerated from the very fact of it and the iron hull being mutually neutral.

However that may be, there are many alloys containing zinc and copper which have a certain value as a sheathing. Prominent among these is Muntz's metal, composed of 50 to 63 parts of copper and 50 to 37 parts of zinc. From its physical constitution it is less active in relation to iron than pure copper is, and yet possesses the property of exfoliation, peeling, solution, salivation, or whatever term may be preferred. On the other hand, it is open to the reproach of being a mixture of two metals, one of which is strongly electro-positive to the other, and is therefore liable to be gradually destroyed by it. The mechanical difficulty of mixing two metals of such different fusing points seems to have been fairly overcome, but the brittleness that has occasionally been noted in sheets that have been exposed to the action of sea-water shows that in those instances the presence of the liquid had

its bad effects. It is used, however, generally for private and occasionally for public vessels.

In view of the fact that the presence of a very small quantity of a third metal, such as antimony or tin, would nullify internal galvanic action, it is not apparent why the simple binary alloy should remain in favor.

The idea of covering an iron vessel's exterior with wood to which metal sheathing could be tacked seems to have been first put in practice in England by Mr. John Grantham in 1851. His method was as follows: Parallel iron ribs of dovetail cross-section were riveted to the outside skin, and short pieces of plank, as thick as the ribs were deep, wedged and bolted on between them; on this was secured by brass screws a thinner sheathing of wood, to which the copper was nailed. All seams were calked and wood surfaces payed with some water-excluding substance. In addition, to prevent any possibility of galvanic action, brass stem and stern posts were fitted, as it was found impracticable to double the wood round those parts.

Many plans have also been suggested to insulate the copper without the intervention of wood. While doomed to failure (as is easy to see now), they are interesting as a past experience and as pointing out the difficulties and dangers hedging the problem.

In 1859 Mr. T. B. Daft devised the plan of drilling holes into the skin, filling them with plugs of ebonite and nailing the sheathing to them, a coating of India rubber being placed between the yellow metal and the iron. A few sheets were secured in this way, in 1863, to a couple of iron ships, and on subsequent examination the insulation was found to have been effective. But the great care necessary in the workmanship, and the expense, coupled with the danger of accident in service, led the inventor to give up the plan in favor of zinc sheathing.

In 1862 Mr. C. W. Lancaster proposed to screw copper studs into the plating at intervals of about 6 inches; the shanks would form rivets outside the sheathing, which was to be separated from the iron by a layer of bitumen. The efficiency of this mechanical combination was doubted, and apparently the plan did not meet with practical success.

In 1866 a somewhat similar arrangement was tried on a French ship, the *Belliqueuse.* Thin sheets of copper were laid over a bad electro-conductive material, such as tarred felt or a stratum of asphalt; they were held on by minute copper rivets, whose inner ends, entering dovetail-shaped holes in the skin, were clinched within the narrow mouth by upsetting, the heads closing over the holes in the copper sheet. The plan does not appear to have been revived, and it is easy to see how impossible it would be to close the little rivet heads tightly enough over the holes to prevent the access of water; electro-chemical action would then be immediately set up, and a very small amount of corrosion would widen

the mouths of the holes and let the rivets drop out, which would result in the sheathing coming off in sheets.

No mode of coppering without wood has passed, and it is perhaps not too much to say that it never will pass beyond the experimental stage. Mr. Grantham's method has been superseded by others superior in some respects. H. M. S. *Inconstant* was built (1866) with flush plating, brought close home to the frames, and thick outside edge-strips, the hollows between being filled with the first course of wood planking, which was fitted vertically and tap-screwed into the edge-strips and other straps placed at intervals for the purpose: the outer course was laid longitudinally, with yellow metal wood-screws.

The method that seems finally to have met with rather general favor is that of simply bolting on a course of plank fore and aft, and securing a second course over that with composition wood-screws, waterproof glue being interposed with each layer, and planks of the different courses being so arranged as to break joints both as regards seams and butts. A total thickness of 5 inches of wood has generally been deemed necessary, though recent plans have been proposed requiring only 3 inches. With this construction brass stem and stern posts are used, owing to the difficulty of sheathing them if of iron.

An interesting experiment was tried on the U. S. Fish Commission steamer *Fish Hawk*, built in 1879. A single course of 2-inch planking was used, secured to the hull by iron bolts. Rubber washers one-eighth inch thick were driven in over the bolt heads, and wooden plugs, well red-leaded, over them. When the vessel was hauled up for examination seven and a half years afterwards no appreciable sign of galvanic action was seen on the plating. One of the planks (3-inch) was taken off the garboard strake, and the paint on the plating and the felting between it and the wood were found to be as fresh as when first put on. With the bolts it was different, the majority being very much corroded; the heads of some were entirely gone and the shanks reduced from five eighths inch to the size of a 20*d*. nail. The yellow metal sheathing had kept clean and worn as well as usual, a new outfit being considered necessary at this time.

It has been suggested to place a zinc plug over the bolt heads in lieu of rubber to absorb the action of the sheathing; but there would be a limit to the life of such protectors depending upon the saturation of the wooden plugs. It seems probable that had brass bolts instead of iron been used in the *Fish Hawk* no injury would have ensued, but in that case if any injury should ensue it would be more serious, as it would be the plating that would suffer.

So much for copper.

As for zinc, the fact of its bearing to iron just the opposite relation of copper is adduced as a powerful argument in favor of substituting it as a sheathing, as galvanic action results in its preserving instead of destroying the iron. Zinc is one of the most oxidable of metals, but

owing to the comparative insolubility of its oxide in sea water, it does not wear away when undisturbed in its natural electric state in that fluid. By putting it in a positive state, which is accomplished by simply allowing galvanic contact between it and the iron, its wasting is not only permitted but hastened; in this condition its surface will remain clean and bright as long as there is any metal left. It seems, therefore, to be only a question of limiting the galvanic action and in that way of controlling the exfoliation.

Perhaps a reason for zinc having made slow progress to the front may be found in the lack of proper appreciation of the necessity of establishing a wide-spread and equable galvanic connection between it and the hull; under other conditions than that it has become foul to such a degree as to be loudly condemned. It has also been so applied as to promote too strong galvanic action, and has wasted too fast, in some instances actually disappearing in the course of an ordinary voyage.

The first mode of sheathing in zinc prominently brought forward and experimented upon was proposed by Mr. Daft, after renouncing copper as a proper material. Spaces three-fourths of an inch wide were left between the edges and butts of the experimental plates, and strips of teak driven in, making a flush surface and giving a foundation for nailing on the zinc, which lay flat on the intervening iron. By some mistake a thickness of glued felt was interposed between the two metals, thus insulating them. To remedy this, nails long enough to touch the iron were driven through the zinc and felt. On being examined after sixteen months' immersion at Portsmouth, England, the zinc was found to be perfectly clean, while the iron frames and chains were covered with barnacles and weed. On being weighed the zinc was found to have lost at the rate of 1 ounce per square foot per annum. That would give a longer life than needed to sheathing of ordinary weight, other experiments having shown that to insure remaining clean, zinc should lose about 2 ounces.

This was very interesting as an experiment, and valuable for the information derived. As a practical solution of the problem, however, it did not gain favor. It was not considered advisable, for structural reasons, to separate the edges of the plating, and the mode of the attachment of the sheets did not give promise of being effectual in service.

Another method proposed was to fill the hollows between alternate outside strakes with planking of the same thickness as the plates, and nail the zinc to that, the sheets lying over and touching the outside strakes. This was open to the objection that the zinc would not be secured in the middle of the outside strakes, and that the thickness of wood (one-half to three-fourths of an inch) would not be enough to insure a strong job. A modification designed to overcome these two objectionable features was devised by Mr. Benjamin Bell. His idea was to increase the depth of the hollow for the reception of the wood either

by putting in a liner between the lapping edges of the strakes, or by bringing all the plates down to the frames with flush edges and riveting them together with outside edge strips, which could be made of any breadth and thickness desired. The *Inconstant's* sheating is an example.

Sir Nathaniel Barnaby has suggested drilling holes in the rivets, filling these with some soft metal and nailing the sheets thereto.

Still another plan, brought forward by Mr. McIntyre, was to secure the edges of the zinc sheets in grooves provided in galvanized-iron strips, which would be riveted to the hull.

A plan which was employed for a certain time in the British navy was to have one course of planking 2½ to 3 inches thick, not calked, and secured to the skin by iron screw-bolts. These bolts were set up with nuts inside and the heads kept flush with the outer surface of the planking, touching the zinc. A notable instance of the success attending this mode of application is the Chilian iron-clad *Blanco Encalada.* After ten years' service this vessel was docked (in 1885) in England, and the iron and the wood sheathing were both found to be in excellent condition. The zinc had wasted away considerably, as had been intended, in order to prevent fouling, and had protected the hull perfectly.

The most recent proposition on this subject is that laid before the Royal United Service Institution, last December, by C. F. Henwood, N. A. In this plan wood or other insulating material is eschewed; no holes are bored in the skin of the ship, but the zinc is secured to it by means of a zinc solder, which, being less electro-positive to iron or steel than zinc itself, should be more enduring. Holes about five-eighths of an inch in diameter are punched in the sheet, 12 inches apart, and a layer of zinc solder is placed round each hole. The positions of these holes are laid off on the hull by means of templates, and the surface there carefully cleaned of scale for a couple of inches and coated with zinc solder. The sheet is then put in place, the layers of solder united with an iron, and the hole in the sheet filled up flush.

In the discussion that followed the reading of this paper, it was pointed out that this system had been applied to a vessel in 1881 under the direct supervision of the inventor, and that after about a year's service, it was found that a large portion of the sheathing had been torn off. The pressure had dislocated some of the sheets forward, and the water getting behind some of the others had burst them off in many places. Furthermore, the inner surface of the sheathing was found to be thickly incrusted with oxide of zinc and salt, while the outer surface was foul. Mr. Henwood's rejoinder to this was that he had been unable to get the men to work the zinc solder, and had finally fastened the sheathing on with common solder, which not only acted as an insulator but did not make a sound connection. In some laboratory experiments, when the combination of metals was exposed to the action of equal parts of hydrochloric acid and water, the zinc was nearly all

removed in about a quarter of an hour, but was still held firmly in place by the zinc solder which apparently had not been acted upon at all; it was also found that this attachment was very substantial and solid.

The flow of water which apparently existed behind Mr. Henwood's sheathing would readily account for the oxide found on that surface, and the diminished action due to its presence between the surfaces and to the poor conductivity of ordinary solder would reduce the amount of exfoliation of the zinc sufficiently to permit its fouling.

One other substance must be cited as on trial to prevent fouling. Recent advices state that a French company have been successful in applying celluloid to ships' bottoms in sheets 1 millimetre (.04 inch) thick, and that vessels thus protected were found clean at the end of six months, while other parts of the hull had fouled. An account of the mode of attachment is, unfortunately, not at hand, nor a statement of the means employed to prevent corrosion of the iron beneath.

In comparing the two prominent sheathing metals, zinc and copper, it becomes apparent first of all that the anti-fouling qualities of both are due to a process of exfoliation, which in the one is checked, and in the other is promoted by galvanic communication with the hull. Assuming that it is easier to promote than to prevent such action, there would seem to be an advantage on the side of zinc from mechanical considerations; in neither, however, has the difficulty proved insurmountable. In the matter of expense zinc costs very much less than copper, and requires only the labor of putting on one uncalked course of wood, while with copper, brass stem and stern-posts are required, and two courses of wood well calked, although the result of the experiment tried with the *Fish Hawk* points to a possible improvement in that respect. Zinc, while wasting away, is said not to retain as smooth a surface as copper, and that is an element of great importance as affecting the speed of the vessel; on the other hand, the wood sheathing being thinner, vessels of the same interior capacity will have less beam and less displacement, if sheathed with zinc than with copper, and the same power will drive them faster. In the matter of safety, there is no disguising the fact that zinc preserves while copper destroys the iron, if the insulation be removed. In the event of grounding or striking heavy wreckage, not to mention the injuries liable to be received in action, the wood might be stripped off, and the copper brought in contact with the hull; but even then, it is claimed by Mr. Mallet and other excellent authorities, that the destruction of the iron would not be so rapid that the vessel could not make a port for repairs, because the surfaces of both metals would become coated with various insoluble salts (carbonates, etc.) derived from the iron and sea-water, which would impede the galvanic action and reduce the rate of corrosion.

Zinc has not yet succeeded in inspiring confidence in its ability to remain clean under water, and until that end shall have been attained

discussion is fruitless. That it can be made anti-fouling was clearly enough shown in the Chilian iron-clad, but still further experiment seems required to emphasize the fact. In all other respects it has advantages over copper, the more essential elements of its superiority, being that its cost and weight (including the wood) are about one half of those of its rival.

In the question of paints *vs.* sheathing a broader field of discussion is open. Regarding it simply from the stand-point of protecting the iron from injury and fouling, no system yet devised does that so well as a wood and metal sheathing; but it is out of the question to regard it from that stand-point alone; there are too many other conflicting elements involved. The mission of a merchant ship is to carry her freight with the greatest celerity and the least expense possible. Relying on paint means a certain semi-annual expense for docking; sheathing entails an additional cost of construction and decreased remunerative carrying power. In balancing the prospective accounts a practically unanimous verdict has been given in favor of painted bottoms.

With naval vessels the case is different. There it is less a question of expense than one of adaptability to the intended service of the individual ship. In the struggle for supremacy in speed of gun-boats and cruisers, the weight of the sheathing is inadmissible, amounting to about 7 per cent. of the displacement if copper be used; it must be devoted to engine and battery power and endurance. If commerce-destroyers, though, are to successfully fill the rôle popularly assigned to them of occupying the ocean highways and attacking the enemy's commerce, they will need to be independent of dry-docks, or the prey will often escape. The efficiency of a blockade is also greatly affected by the solution of the same tactical question. In this respect the naval policies of different countries should naturally be influenced by their foreign and colonial policies. A nation that has docks of her own all over the world and the means to defend them might look with less favor than others on the plan of sheathing her cruisers. In the same way a country possessed of large fresh-water rivers may safely eschew all plans involving such an additional load to be carried by her coast-defense armor-clads; but an eloquent appeal for protection, even at that cost, is contained in the history of the *Huascar's* last fight, when with a foul bottom she could not escape from the zinc-sheathed *Blanco Encalada*.

A somewhat sudden impulse given to the development of high engine-power and coal endurance put a check upon the practice of sheathing men-of-war, and there are now cruisers in commission or building that will need docking oftener than coaling. Not until the demand for the rapid type of cruisers was satisfied could the various admiralties resume the study of the problem of fitting vessels to keep the sea indefinitely, but that question is now receiving attention once more in several countries. Even in England, with dry-docks all over the world, there are building three 3,000-ton 19½-knot protected cruis-

ers which will have a wood and copper sheathing, and the year's programme calls for four 1,600-ton vessels of 16½ knots speed and two of 1,200 tons, to be similarly sheathed, besides a number of composite-built gun-boats.

The same principle is illustrated in Continental Europe by three 4,300-ton cruisers building in Germany; and in Russia, by a 5,000-ton vessel, all to be sheathed and coppered.

It seems probable that at the end of a few months at sea a sheathed vessel will have a speed fully equal to that of one unsheathed of the same displacement, with painted bottom, and with the weight of sheathing saved given to the motive machinery; and the former alone will be capable of prolonged service away from friendly ports and docks.

VIII.

TRANSPORTATION OF TORPEDO-BOATS BY RAILWAY.

BY LIEUTS. W. I. CHAMBERS AND A. SHARP, U. S. N.*

The problem of transporting torpedo-boats by railway has been under consideration for several years in countries where its military advantages are strikingly apparent, notably in the United States, Denmark, Russia, and France; and it is only of late that, owing to the increased size of torpedo-boats, it has become at all difficult. The only countries, however, in which torpedo-boats have actually been transported any considerable distance by railway are Russia and France. In Russia fifty boats of about 75 feet length, 9 feet beam, and 21 to 28 tons load displacement were transported by canal and railway from the Baltic to the Black Sea, in August, 1885.

The feat performed by the French in August, 1887, by way of experiment, was much more difficult of accomplishment. A boat of 108 feet 2 inches length, 10 feet 8 inches beam, 9 feet greatest depth, and 50 tons load displacement, weighing 38 tons when stripped for transportation, was successfully sent by railway from Toulon to Cherbourg.

In a country possessing an extensive coast line or in one bounded on opposite sides by separate coasts, there are many strategic advantages incident to transportation of torpedo-boats by railway.

(1) It admits of a ready transfer and concentration of a valuable power to threatened points on the coast which are difficult of access by sea, owing to the presence of an enemy or to stress of weather outside.

(2) It increases the chances for a surprise to a blockading or attacking force by operating from in out, and from a secure base.

(3) A smaller number of boats is required to supply the demands of protection for the whole coast. As it is not probable, and possibly not desirable that the United States should maintain a sufficient number of boats in a state of readiness to protect simultaneously all points of her extensive coast, a certain amount of reliance must be placed upon internal transportation by railways, rivers, and canals.

* The preparation of this article was begun by Lieutenant Sharp, and upon his joining a cruising ship it was completed by Lieutenant Chambers.

(4) In time of war transportation by railway may frequently be safer and more certain than by canals or by sea. Canals and rivers may be blocked by ice and storms may interrupt voyages by sea. The Hudson River, the Erie Canal, and the Illinois and Michigan Canal are all closed to traffic during the winter. Boats making a sea voyage are liable to capture, especially if bad weather be encountered, and the ports which they are required to seek for rest and shelter may be occupied in advance by the enemy.

(5) When distances are great, transportation by railway may be more rapid and less fatiguing than by water. The speed of torpedo-boats naturally suffers great reduction in a seaway. Their scantlings being light, high piston speeds and the sea produce vibrations which render rest difficult, and runs of forty-eight hours' duration in bad weather frequently leave the crews so much fatigued that detention in ports becomes a matter of necessity.

In 1885 the French transported a 108-foot boat from the English Channel to the Mediterranean by way of the Seine, the Canal de Bourgogne, the Saone, and the Rhone. It required extreme care on the part of the management, the speed was slow, and the conclusions were that though practicable, this method should be resorted to in cases of absolute necessity only. All traffic had to be suspended on the canal, and it was necessary to dismantle the boat to such an extent that she required extensive repairs on arriving at her destination. This objection obtained particularly with the propeller skeg with which the boat was provided.

(6) Another advantage in a strategic sense is the possibility of storing torpedo-boats at places removed from the exposed coast, and of using the numerous inland private plants for building and repairing them.

In case of an important railroad terminus falling into the enemy's hands branch roads could be readily utilized to connect with a safer point for debarkation.

DIFFICULTIES OF THE PROBLEM.

The problem of transporting light second-class boats by railway presents no serious difficulty, but there is a limit to the size and shape, and it is quite out of the question to transport the largest or "deep sea" class of modern boats over most of the existing railways.

The limits to size and shape are fixed principally by the clearance spaces in tunnels, bridges, and open cuts. The weight affects the question only to the extent of requiring special arrangements of trucks for supporting the heavier boats, but their odd shapes make them inconvenient to handle in loading on the cars and in launching. The scantlings of these boats are very light and they are subject to injurious strains both in handling and while the train is in motion.

During the French experiment referred to on page 288, the boat swayed from side to side, but in the end was not found to have suffered greatly.

The existence of curves in railroads requires that the larger of these boats be mounted on cradles or saddles, which while rigidly held at points a fixed distance apart, admit of a horizontal movement on the cars which support them.

METHOD OF MOUNTING ON CARS.

The French boat, No. 71, was mounted on two specially designed six wheel trucks (see Figs. 2, 3, and 4, Plate I,) each provided with a movable or pivoting saddle. These trucks had their axles about 7 feet apart, the end axles having a "Recour bearing" which enabled them to turn sufficiently to traverse a curve of 375 feet radius.

Owing to the want of clearance in the French tunnels, the trucks were designed to carry the boat as low as possible, and they were made of iron and steel at Creusot. The frame of each saddle was 6¼ feet long and rested on live rollers, which traversed in appropriate guides across each truck; the pivot centres were only 27 feet apart. The forward portion of the boat extended about 44 feet beyond the forward pivot and the after portion about 33 feet abaft the rear pivot. The special trucks were coupled to platform cars, the car under the stern of the boat being of special construction on account of the propeller skeg which projected below the line of the car floors.

The position of the saddles or cradle-pivots is dependent upon the lateral clearance of the curves of the road. The ends of a boat being tapered in shape, it follows that there is less clearance required when the pivots are near together than when they are widely separated. It was doubtless a matter of necessity on the French roads to place the pivots so near together, or the boat would not have been mounted with so much of its ends unsupported. In the United States, however, the tunnels are mostly on a tangent, or straight, and whenever they are not the clearances are greater than in straight tunnels; so that, assuming that torpedo-boat trains will not pass other trains on the curves, the clearance spaces in open cuts are the principal ones to be considered in determining the position of the pivots. In their suggestions on the subject, our railroad authorities have invariably preferred to place the pivots for the larger boats about 60 feet apart.

HANDLING.

The French boat, No. 71, was lifted out of the water at Toulon by a powerful hydraulic crane, and was dismounted at Cherbourg by a floating derrick, as shown in Fig. 1, Plate I.

It is probable that the most convenient method of handling these boats is by lifting them in some such manner. Derricks are obtainable for this purpose at our navy-yards and large commercial ports, and

where the only derricks available are mounted in fixed positions, away from the railroad tracks, it may be possible to run the cars upon the railroad company's barges, and tow them under the derricks for handling the boats.

When a floating derrick is available it would doubtless simplify matters to tow the derrick to a convenient point near the tracks for handling the boats.

In some cases, where derricks are not available at the water's edge, it may be convenient to utilize the derrick after hauling the boat up to it on ways; and where a number of light second-class boats are to be handled at a point unprovided with derricks, time and expense would perhaps be saved by erecting a temporary derrick at that place.

But it will not do to be entirely dependent upon derricks, as in many cases they will not be available. The sharpest curves and most restricted tunnels are usually found near the city terminals of railways, and it may often be advantageous to launch or handle the boats in a river or inlet outside the thickly settled portion of the city. Again it may be advisable to launch the boats at intermediate points away from cities, in order to gain some strategic advantage or to escape difficulties attending such matters in large towns. Therefore, if the cradles used are to be of a uniform pattern, as is manifestly desirable, they should all be designed with a view to facility in handling the boats on temporary ways or skids, in order to be independent of derricks.

At some gun-boat and torpedo-boat yards the boats are stowed across a long row of buildings, stern outboard, and side by side, on railways. When they are needed they are hauled out astern and transferred to bogies on a seven-track railway, then traversed sideways to the launching channel and pushed on the launching ways.

PRECAUTIONS.

In preparing a heavy boat for transportation, the stores, coal, water, ground tackle, movable machinery, compass, sky-lights, hand rails, top of pilot tower, funnels, rudder, and propeller, should be removed and carefully stowed in box or flat cars to accompany the train. The machinery should be protected against corrosion, cinders, and dust, by white lead and tallow, all valves should be closed, and all pipe openings or outlets in the skin should be closed with pine plugs and canvas. Chafing gear should be applied to all parts exposed to friction, care being taken not to increase the beam or height of the boat by such additions, and all openings in the deck should be battened down to exclude water.

The boat resting on its keel in the cradle should be carefully adjusted to the upright position by the chain lashings which hold it down, and then shored up wherever necessary.

The bearings of the shores or wedges against the boat should be longitudinal pine strips, by which the strains, experienced from the boat

swaying from side to side, are distributed throughout a considerable surface of the bottom. After the shores and wedges are satisfactorily set up they should be lashed to prevent being worked out of place by the oscillations of the boat in transit.

MAKING UP THE TRAIN.

It is a matter of economy to transport several boats by the same train, and when a number of light second-class boats, which are easily handled, are to be conveyed it would perhaps be advisable to send as many in one train as would be allowed by the regulation limit on that particular road; usually about 700 feet. But when heavy boats are to be transported in emergency, it would not be wise to delay dispatching a boat already mounted until others are prepared, because its cradle and trucks would be wanted as soon as possible to convey another boat. Nor would it save time to make up a mixed train of heavy and light boats, since the heavier boats must be transported at less speed than the lighter ones.

Each boat should be accompanied by its crew and complete outfit, except perhaps stores and coal.

The train should include two flat or box cars for the boat's accessories, both preferably ahead of the boat—but the lighter one astern if needed to complete the coupling. The ordnance stores and some other portions of the boat's equipment will require special care to preserve them from the weather and rough handling.

The boat should always be under observation by the crew.

The French train, in the experiment with No. 71, included one first and one second-class coach for the commission, one third-class coach and two cars for the accessories, in addition to the special trucks and platform cars needed to support the boat and complete the coupling. It was accompanied by one lieutenant, in command, one petty officer, and a crew of ten men; and to show what should be guarded against, it is well to mention that during the preliminary trials, from La Seyne to Ciotat, an unfortunate petty officer was thrown from the train by telegraph wires. A slight heating of bearings also occurred.

SPEED.

Great care should be taken with the train to slow down at curves and places of least clearance, owing to the oscillations to which the boats are subject. On a straight line, however, the train may move at considerable speed.

If the boats be taken through as regular freight, an average speed of 10 to 15 miles per hour may be made. In urgent cases, on many roads, they may be taken by special train at a speed of 20 to 30 miles per hour, and even faster for the smaller boats.

The French boat, No. 71, made the trip of 647 miles in four days (the train stopping at night), making a speed of 15½ to 18½ miles per

hour while under way, the speed being at times increased to 24 miles per hour by way of experiment. This trial proved that, with the trucks and cradles ready for use, a 108-foot boat could be docked at Toulon and leave by train twenty-four hours afterward, and that it could be ready for service twenty-four hours after arriving at Cherbourg.

COST.

The actual cost of transporting these boats by railway is, of course, fluctuating and difficult to determine, owing to the novelty of the scheme and the uncertainty of the details involved.

In the French experiment the cost of preparing the cars was $6,400; or $2,600 for each of the special trucks, and $1,200 for the open platform car under the propeller skeg. The railway company charged 2½ cents per ton per mile, which made the expense of actual transportation from Toulon to Cherbourg $2,730.

In estimating the cost of this experiment, however, it must be remembered that the expense incurred for special trucks and cradles would not be counted after the first trip, or rather that the same rolling stock would serve for many trips or boats.

CONCLUSIONS.

The transportation of torpedo-boats by railway being strictly an emergency expedient, speed or rapidity of transportation is of the greatest value. And since the principal element in the time necessary to transport a number of boats from one locality to another is the time required to provide the necessary trucks and cradles, this equipment of satisfactory and proved design should be furnished in sufficient numbers at places where the boats may be stored in readiness for use.

It is thought to be entirely practicable to settle upon a uniform and satisfactory design of cradle which will satisfy the clearances of all roads and efficiently support all boats that can be taken, and that the railroad people should not be depended upon or required to do it. It will be found that such a cradle would require a special design of trucks to pass the largest boats over some roads.

The United States is fortunate in the number and extent of its railroads and in the situation of its trunk lines for the transportation of torpedo-boats to localities of strategic importance. It is possible to convey the boats by railway in comparative safety to and between all important places on the Atlantic, Gulf, Lake, and Pacific coasts and the Mississippi River, and in the most important cases there is more than one route suitable to this purpose.

In determining types of torpedo-boats, therefore, this advantage should be kept in view, and the fact that second-class boats, whose dimensions fall within the ordinary railway limitations may be shipped

over any road without special arrangements of trucks and cradles should receive due consideration and weight.

During the preparation of this article Lieutenant Chambers designed a transporting cradle which possesses the following advantages:

(1) Rigidity and strength combined with lightness.

(2) Simplicity and facility for transporting and assembling the parts.

(3) Facility for construction at any place where sawed timber can be obtained.

(4) Possibility of mounting the pivots low down, either on ordinary platform cars or special trucks.

(5) Adaptability for handling the boat on skids at places where derricks are not available.

(6) Adaptability to boats of all sizes and shapes which it is possible to transport by railway.

(7) Perfect support of the boat on its keel and bilges throughout a length of 60 feet.

[Ed.

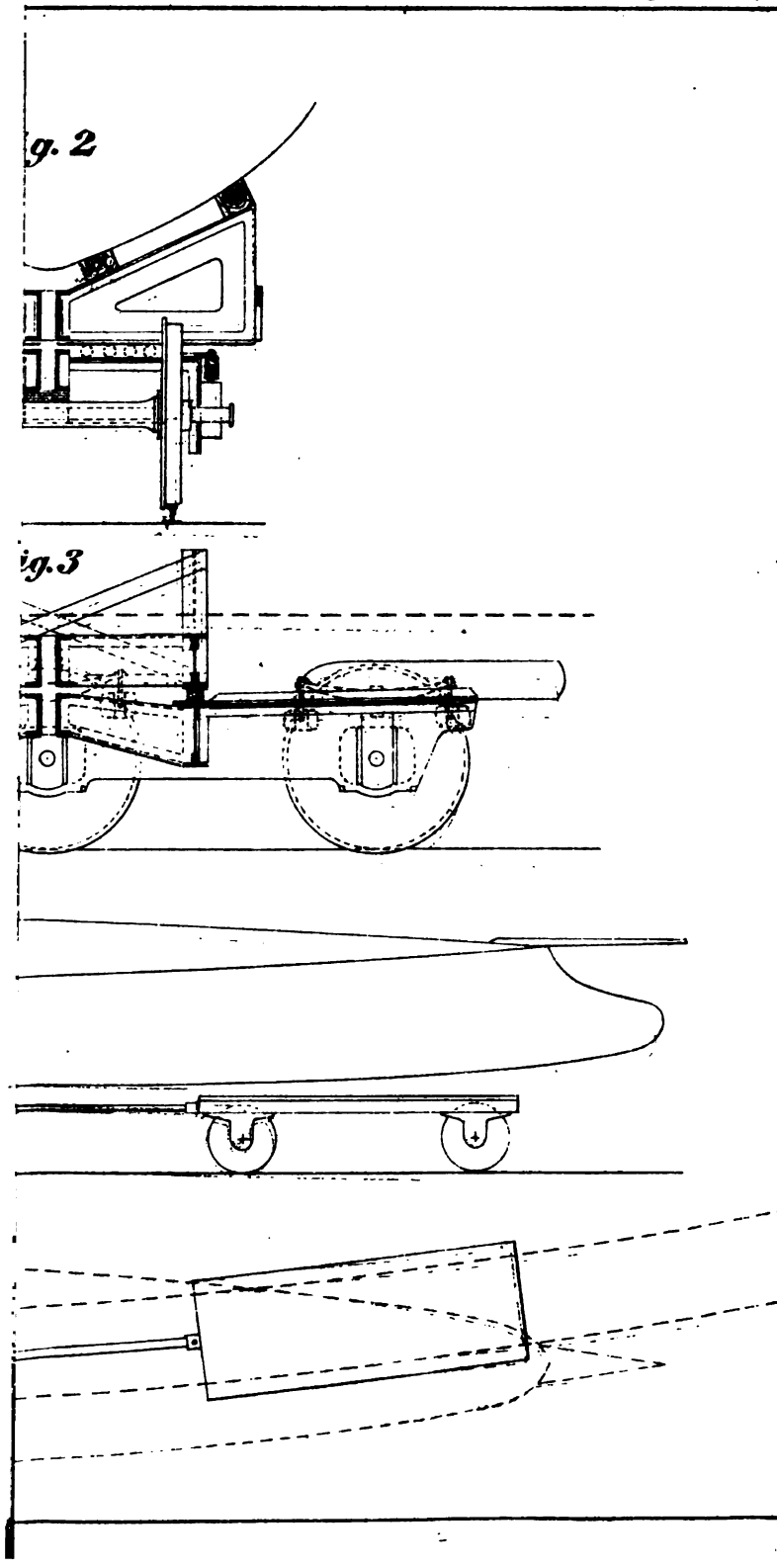
g. 2
ig. 3

NOTES

ON

SHIPS, MACHINERY, ORDNANCE, ARMOR AND PROJECTILES, TORPEDOES, TORPEDO-BOATS, AND OTHER SUBJECTS OF PROFESSIONAL INTEREST.

SHIPS.

UNITED STATES.

VESSELS PROPOSED OR LAID DOWN.

Contracts for all the unarmored vessels authorized by acts of Congress in 1885, 1886, and 1887 have been awarded; the last is to be completed in October, 1889.

The armored vessels authorized by the act of the 3d of August, 1886, are to be built at Government yards.

TEXAS.

This battle-ship is to be built at the Norfolk navy-yard on designs by Mr. W. John, general manager of late Barrow Ship-building Company.

The main battery consists of two 12-inch B. L. and six 6-inch B. L. The former are in turrets placed *en echelon*, the port one forward and the starboard one aft. The train of port gun is 180° on port side, and from abeam to 40° forward on starboard side; the after one trains 180° on starboard and 70° on port side. Two of the 6-inch guns are on the upper deck, one forward, one aft, near the 12-inch guns, and each trains through 240°; the others are in sponsons on the lower deck, two each side, with firing arcs of 115°. The secondary battery is composed of four 6-pounder and four 3-pounder R. F. G.*, four 47-millimetre and four 37-millimetre R. C.**, and two Gatlings. Four torpedo-launching tubes will be fitted.

The estimated speed is 17 knots, and the I. H. P. with forced draft, 8,600. The engines, driving twin screws, are triple-expansion; diameters of cylinders, 36, 51, and 78 inches; length of stroke, 39 inches. Steam is taken from four double-ended boilers, 17 feet long and having a diameter of 14 feet.

The normal coal allowance is 500 tons; 950 tons can be carried, giving a radius of efficiency of 3,137 nautical miles at a speed of 15.2 knots†, 4,500 at 13.3 knots‡, and 8,592 at 10 knots.

For defense the vessel has a water-line belt of 12-inch steel armor in wake of magazines, engines, and boilers. The ends are connected by athwartship < >-shaped, 6-inch steel bulkheads. An armored redoubt runs diagonally across on main deck, inclosing and protecting bases of turrets and their machinery; this as well as the turret armor is 12-inch steel. The conning tower has same protection. The ammunition tubes have 6-inch, and tube from conning tower down to protective deck, 3-inch steel protection. The protective deck, 3 inches thick, covers the armor belt and curves down forward and abaft it to stem and stern. Coal bunkers are outboard of, and above boiler and engine rooms.

Between the starboard and port fire-rooms are magazines and shell-rooms, with a fore-and-aft passage above them communicating with additional ammunition spaces forward of fire-room, and abaft engines.

The displacement, at normal draught of 22 feet forward and 23 feet aft, is 6,300 tons; with 950 tons of coal on board it is 6,750.

The length between perpendiculars is 290 feet, and extreme beam 61 feet 1 inch.

---

* Rapid fire guns. † Maximum natural draft speed.
** Revolving cannon. ‡ Two third natural draft, or sea speed.

The *Texas* is to be built of steel. She will have a double bottom and numerous water-tight compartments; there are to be two masts with military tops; electric search lights are to be placed on hurricane deck and chart-house. The estimated cost, exclusive of armament, is $2,376,000.

MAINE.

This armored cruiser has her keel blocks laid at the New York navy-yard, where material for her construction will be immediately delivered. The designs were prepared in the Navy Department. She is an improved and enlarged *Riachuelo*, a Brazilian armored cruiser built by Samuda at Poplar and launched in June, 1883.

The armament comprises four 10-inch B. L. and six 6-inch B. L. The heavy guns are mounted in pairs in the two turrets placed *en echelon* on main deck, the forward turret on starboard side, the after on port; the forward pair of guns thus has an arc of train of 180° on starboard side and 57° to port, the after pair 57° to starboard and 180° on port side. The 6-inch guns are provided with 2-inch shields; two are in recessed bow ports with a train of 93° forward and 50° abaft beam, two are similarly placed in quarter ports, two are on superstructure deck in broadside, each with a fire of 65° forward and abaft the beam.

The secondary battery numbers four 6-pounder and four 3-pounder R. F. G., four 47-millimetre and nine 37-millimetre R. C., and four Gatlings. There are to be seven torpedo tubes.

The estimated speed is 17 knots, and the I. H. P. 8,750, with forced draft. The twin screws are worked by two vertical triple expansion engines in separate water-tight compartments; the diameters of cylinders are 35.5, 57, and 88 inches; length of stroke, 36 inches. Steam is taken from eight cylindrical return-tubular boilers 14 feet and 8 inches in diameter and 10 feet long.

The normal coal allowance is 400 tons. The total capacity is 822; with this the effective radius is 2,770 miles at 14.8 knots†, 3,960 at 13 knots†, and 7,000 at 10 knots.

The protection consists of a steel armor belt 180 feet long, having a thickness of 11 inches down to 1 foot below water-line, and from there tapering to 6 inches at bottom; the two forward ends are joined by an athwartship bulkhead of 6-inch steel armor. Above it, but below turrets and protecting their bases, loading tubes, machinery, etc., are oval redoubts carrying 10-inch armor; the turret armor varies from 10.5 inches to 11.5 inches in thickness. The conning tower is 10 inches thick, and a 4.5 inch tube runs down from it to protective deck. This deck is 2 inches thick over belt and 4 inches where it slopes down aft between its ends; forward and abaft belt the deck is 2 inches thick.

Cofferdams 3 feet high are built around engine and fire-room hatches. The vessel has a double bottom and numerous water-tight compartments.

The *Maine* is bark rigged and spreads 7,135 square feet of canvas. Military tops are carried on fore and main masts. The principal dimensions are: Length between perpendiculars, 310 feet; beam, 57 feet; displacement, 6,648 tons at a mean draught of 21 feet 6 inches.

The estimated cost of hull and machinery is $2,484,503.

CHARLESTON.

This protected cruiser is described on page 238, General Information Series, No. VI. Since that publication was issued her armament has been reduced; instead of the two 10-inch B. L. in the barbette towers, two 8-inch B. L. will be carried.

The engines were designed by Hawthorn, Leslie & Co., England.

The normal coal allowance of this vessel is 328 tons; the bunker capacity is 800, giving her an effective radius of 2,277 miles at a speed of 16.5 knots†, 3,229 at 15.6†, and 6,450 at 10 knots.

The *Charleston's* keel was laid in August, 1887. She will be launched on the 19th of July, 1888.

NEWARK.

The *Newark* is described on page 239, No. VI. The contract for building was given to the William Cramp & Sons Ship-building Company on the 27th of October, 1887, for $1,248,000; to be completed in two years. The machinery is to be built on contractor's designs.

The normal coal allowance is fixed at 400 tons; with bunkers full, *i. e.* 850 tons, her radius of efficiency is 3,100 miles at 17.2 knots†, 4,377 at 15.2 knots†, and 10,700 at 10 knots speed.

The keel was laid in June, 1888.

PHILADELPHIA.

This protected cruiser was originally known as "Cruiser No. 4," and given to contractors under that name. The hull, with slight modifications incident to change of battery, is the same as the *Baltimore*, described on page 237, No. VI.

The battery is composed of twelve 6-inch B. L.; two are on topgallant forecastle, two on poop, and eight on spar deck in broadside; the forward and after spar-deck guns are on sponsons for bow and stern fire. All the guns are protected by shields.

The secondary battery and torpedo armaments are the same as in the *Baltimore*.

The two engines, driving twin screws, are triple-expansion; their cylinders are 38, 56, and 86 inches in diameter; length of stroke, 40 inches; they take steam from four double-ended boilers of 14 feet diameter and 20 feet length; the grate-surface is 624 square feet.

The *Philadelphia* has 3 masts with 5,600 square feet of fore and aft canvas. Military tops are carried on the fore and main. The contract for hull and machinery, on their own designs, was awarded to Messrs. William Cramp & Sons on the 27th of October, 1887, for $1,350,000; the work to be done in two years, and the vessel is guaranteed to make a speed of 19 knots for four consecutive hours, at a mean draught of 19 feet and 2.5 inches. A forfeit of $50,000 will be exacted for each quarter of a knot short of contract speed, and a bonus of same amount is promised for each quarter of a knot in excess.

The keel was laid in April, 1888.

SAN FRANCISCO.

This cruiser, originally known as "No. 5," has the same hull as the *Newark*, described on page 239, No. VI. Her battery is better disposed; the extreme forward and after sponsons are done away with, and the guns placed on the forecastle and poop, as in the *Philadelphia*.

The sail-power is reduced to 5,410 square feet of fore-and-aft-canvas, carried on three masts; the fore and main masts have military tops.

The engines are of same general type as the *Baltimore's*; the length of stroke is 36 inches. The four boilers are double-ended, horizontal return-tubular.

The contract for building the hull and machinery, on Navy Department designs, was awarded on the 26th of October, 1887, to the Union Iron Works of San Francisco, Cal., for $1,428,000.

The *San Francisco* is to be completed in two years, and the contractors guarantee a speed of 19 knots for four consecutive hours, at a mean draught of 18 feet 9 inches. For every quarter of a knot in excess of this speed a bonus of $50,000 will be paid, while a forfeit of $50,000 will be exacted for each quarter of a knot under 19, if that speed is not reached.

PETREL.

Described on page 241, No. VI, as "Gun-boat No. 2," is building at Baltimore. She has two cylindrical, horizontal tubular boilers 8 feet 8 inches in diameter, and 18 feet

4.5 inches long, instead of those previously mentioned. The contract was given to the Columbian Iron Works on the 22d of December, 1886. The price for hull and machinery, constructed on Department designs, is $247,000.

The first keel-plate was placed on the blocks on the 27th of August, 1887.

CONCORD—BENNINGTON.

Originally known as "Gun-boats No. 3 and No. 4." They are in all respects sister ships to the *Yorktown*.

The contract for building them was executed on the 15th of November, 1887, with N. F. Palmer, Jr., & Co.; they are to be completed in eighteen months, and the guaranteed horse-power is 3,400. The contract price, exclusive of armament, is $490,000 for each. The Quintard Iron Works of New York city are building the engines. A bonus of $100 will be paid for each H. P. developed above the contract figures on trial, but if those figures are not reached a forfeit of $100 per I. H. P. will be exacted.

The vessels are building at Chester, Pa., by the Delaware River Iron Ship-Building Company; their keels were laid in May, 1888.

VESSELS LAUNCHED.

YORKTOWN.

A partially protected cruiser, described on page 240, No. VI, as "Gun-boat No. 1."

The contract for building hull and machinery was given to William Cramp & Sons on the 31st of January, 1887. The engines are on contractors' designs and guaranteed to develop an I. H. P. of 3,000.

The contract price is $455,000, and the vessel was expected to be completed in one year. A bonus of $100 will be paid for each H. P. developed above contract figures on trial; a forfeit of $300 per I. H. P. will be exacted if the performance of engines falls below contract requirements.

The keel was laid on the 14th of May, 1887, and she was launched on the 28th of April, 1888.

VESUVIUS.

This vessel was described as the "Dynamite-gun Cruiser" on page 242, No. VI. Since that time she has undergone some changes; the three pneumatic tubes of 15-inch calibre are placed abreast and parallel at a fixed angle of 16 degrees, the muzzles projecting through the deck at a distance of about 37 feet from the bow. The terms of the contract require that they should be able to throw a shell every two minutes, but it is claimed that they can load and fire two shells per minute, the lower sections of the tubes working on hinges to facilitate the operation. The secondary battery has not yet been determined.

The three-bladed twin screws are worked by two vertical, four-cylinder, triple expansion engines of about 4,000 I. H. P. The diameters of cylinders are H. P. 21.5 inches, Int. 31 inches, and the two L. P. 34 inches; the length of stroke is 20 inches, and the estimated piston speed 930 feet.

Steam is supplied by four three-furnace locomotive-boilers 9 feet in diameter, 19 feet 8 inches long, with a grate surface of 200 square feet. The coal capacity is 140 tons.

The principal dimensions are: Length between perpendicular 246 feet 3 inches; beam, 26 feet 6 inches; depth, 14 feet 1 inch. The displacement is 805 tons, with a mean draught of 9 feet 3 inches.

Thirty full-calibre shell will be carried, each containing 600 pounds of explosive gelatine.

The contract price is $350,000; the guaranteed speed is 20 knots. The vessel is building at William Cramp & Sons' yard; her keel was laid in August, 1887, and she was launched on the 28th of April, 1888.

STEAM TRIALS.

BOSTON.

On September 1, 1887, this vessel had a continuous six-hour trial of machinery to determine the horse-power. The mean draught was 17 feet. The mean results of half-hourly observations and indicator cards for the run were as follows: Air pressure in fire-room, 0.987 inches; steam pressure in boilers, 88 pounds; vacuum. 24.25; revolutions, 72.3. The I. H. P. was, in high-pressure cylinder, 1,395.79; in forward low pressure, 982.716; in after, 1,076.35; collective, 3,454.85; auxiliaries, 325; total, 3,779.85. The contract requirement was 3,500.

The maximum horse-power developed for one hour was 4,249. As the vessel's bottom was very foul, the corresponding speeds were low; the mean for six hours was 13.8 knots, and the maximum for one hour 14.9.

The *Atlanta's* mean speed on a similar trial, with same draught of water, was 15.54 knots, with an I. H. P. of 3,345.42.

CHICAGO.

A continuous six-hour trial, to determine if the I. H. P. developed by machinery reached the contract figure of 5,000, was run on the 16th of December, 1887. The ship was at her load draught. The result of half-hourly observations and indicator cards gave a mean boiler pressure of 84.6, and the following data: For starboard engine, vacuum 25, revolutions per minute 69.3, I. H. P. 2,514.48; for the port engine, vacuum 25.2, revolutions 69.3, I. H. P. 2,209.46. The collective horse-power was for the main engines, 4,723.9; for the auxiliary engines, 359.8; giving a total I. H. P. of 5,083.7. The maximum power developed for one hour was 5,248.42. The mean speed for the trial was 15.3 knots; the maximum for one hour 16.3. The vessel's bottom was very foul. The blowers were going during the trial, but the fire-rooms were not closed.

ENGLAND.

VESSELS PROPOSED OR LAID DOWN.

This year's ship-building programme does not include any battle ships; those under construction are being pushed towards completion, but the new vessels to be built are of the protected-cruiser type; the ability to carry their batteries at a high speed for a long distance being the principal factor of the designs of the most improved of that class.

BLAKE—BLENHEIM.

These vessels are designed to exceed in speed, protection, and radius of efficiency all cruisers heretofore built.

Their armament is not definitely determined, but if the experiments with rapid-firing guns throwing a hundred-pound projectile turn out successfully, ten 6-inch of that class will be mounted in broadside, in addition to two 9.2-inch (22-ton) bow and stern guns.

The secondary battery will be large, comprising eighteen 3-pounder R. F. G. Four torpedo tubes will be fitted. The speed on measured mile is to be 22 knots, with bunkers full and everything on board; at sea they are to maintain a continuous speed of 20 knots, their coal supply being sufficient for 3,000 miles at that speed; the effective radius at 10 knots is about 15,000 nautical miles.

Twin screws are worked by triple-expansion engines of the vertical type of 20,000 I. H. P.; their cylinders are protected by a dome-shaped, steel shield 4 to 6 inches

thick extending some feet above the protective deck. The protective deck extends from stem to stern and is to be heavier than any previously fitted.

The length of these vessels is to be 375 feet; beam, 65 feet, and their displacement about 9,000 tons. This is a great advance in size in the cruiser type, but their tonnage is less than that of the first-class ocean steamers they will have to protect or chase in time of war.

The *Blake* is to be built at the Chatham yard, and the *Blenheim* by contract. They were designed by Mr. W. H. White, director of naval construction.

BLANCHE—BLONDE—BARRACOUTA—BARROSA.

These third-class partially protected cruisers present the novel feature of an armament composed entirely of rapid-firing guns. Their main batteries are to be six of the new 36-pounder Armstrongs, three mounted in each broadside, and the forward and after guns on sponsons for bow and stern fire.

The weight of this gun is 3,400 pounds, and its calibre is 4.724 inches (12 centimetres). On trial it has fired ten aimed shots in one hundred seconds, and ten have been discharged without aiming in 40 seconds.

Taking the factor of time into consideration, the weight of bow or stern fire in these vessels, 72 pounds at each discharge, will be 432 pounds per minute, which, at close quarters, could be increased to 1,080 pounds; for broadside fire these weights will be respectively 108, 648, and 1,620 pounds.

The secondary battery will number four 3-pounder R. F. G. Two 14-inch torpedo-tubes will be fitted.

Twin screws are driven by vertical triple-expansion engines. The boilers are to be of the ordinary marine return-tubular type. The I. H. P. with natural draft is estimated at 2,000, and with forced, at 3,000.

With a full coal supply of 160 tons on board, the speed over a measured mile is estimated at 16.5 knots, and at sea 15 knots. The effective radius at 10 knots is to be about 3,400 nautical miles.

These vessels are designed by Mr. White for service on stations where docking facilities do not exist or may not be available in time of war; consequently their steel hulls are sheathed with wood and coppered. For internal protection they have a steel deck with a minimum thickness of 1 inch and a maximum of 2 inches over vitals.

The displacement will be 1,580 tons at mean load draught of 14 feet; the length between perpendiculars is to be 220 feet, over all 233 feet, and the beam 35 feet. Only light fore-and-aft steadying sails will be carried.

The first two are to be built at Pembroke yard. The keel of the *Barracouta* was laid in June, 1888, at Sheerness, and that of the *Barrosa* at Portsmouth in May, 1888.

BARHAM—BELLONA.

For service near a base where docks are available; two vessels similar to, but larger than, the foregoing are to be built of steel, but the bottoms will not be sheathed.

The armament and protection will be the same as in the *Blanche* class. Their speed will be greater, the maximum being estimated at 19.5 knots, by developing 5,500 I. H. P. in the vertical triple-expansion engines. Their effective radius at 10 knots will be about 2,600 miles.

These two cruisers will be supplied with the marine-locomotive type of boiler. They are to be 50 feet longer than the *Blanche* class, *i. e.*, 270 feet, and their displacement is increased to 1,800 tons.

The *Barham* will be constructed at the Portsmouth yard; the *Bellona* will probably be built by contract.

BASILISK—BEAGLE.

Partially protected cruisers. These vessels are of an improved *Buzzard* type, similar to *Daphne* and *Nymphe* mentioned on page 244, No. VI. (Seealso p. 195, No. V.)

Their speed is to be 14.5 knots over the measured mile, with 160 tons of coal on board. The engines are to be triple expansion and are expected to develop 2,000 I. H. P.

The displacement will be 1,170 tons at a mean load draught of 12 feet 5 inches; length 208 feet, and beam 30 feet. The former *Buzzards* were composite; these two vessels will be built of steel, and as they are intended for service on distant foreign stations, they will have bottoms wood sheathed and coppered, and will carry a fair amount of sail; but this is only auxiliary to their steam-power.

The *Basilisk* is to be built at Sheerness; the *Beagle's* keel was laid at Portsmouth in May, 1888.

MAGPIE—REDBREAST—REDPOLE—WIDGEON—GOLDFINCH—LAPWING—RINGDOVE—SPARROW—THRUSH.

These gun-boats are of an improved *Rattler* or *Pheasant* type, described on page 245, No. VI. There has been a further increase of beam of 1 foot over that of the *Pheasant* and the displacement is about 50 tons greater, or 805 tons at a mean load draught of 11 feet 7.5 inches.

The first four are building at Pembroke yard; the *Goldfinch* at Sheerness; the *Lapwing* and *Ringdove* had their keels laid at Devonport during May, 1888; and the last two are to be built by Messrs. Scott & Co., Greenock.

The *Magpie* was laid down in December, 1887; the *Redbreast* and *Redpole* in January, 1888, and the *Widgeon* in May, 1888.

VULCAN.

A torpedo-depot ship designed to perform duties similar to the *Hecla*. She is to have only a light battery of eight 36-pounder and twelve 3-pounder R. F. G., but will have a powerful torpedo armament and carry a large supply of topedoes, submarine mines, and all the gear required for submarine work on a large scale.

In addition a number of torpedo boats will be carried and workshops, etc., will be arranged for their repairs and fitting.

The speed at load draught is to be 20 knots over the measured mile, and 18 knots continuous steaming at sea. The large coal capacity (1,000 tons) gives a radius of efficiency of 3,000 miles at this speed, and 12,000 miles at 10 knots.

The displacement is to be 6,620 tons at a mean draught of 22 feet; length 350 feet, and breadth of beam 58 feet. A complete protective deck will be fitted, the protection over machinery, etc., to be from 2.5 inches to 5 inches thick.

Hydraulic power will be applied on a large scale for lifting boats and doing all kinds of work.

The *Vulcan* is building at the Portsmouth yard, where the keel was laid in June, 1888. The contract for the engines was given to Humphrys, Tennant & Co. The I. H. P. is to be 12,000.

SHARPSHOOTER—SPANKER—SPEEDWELL—SALAMANDER—SEAGULL—SHELDRAKE—SKIPJACK.

Torpedo vessels of an enlarged *Grasshopper* or *Rattlesnake* type. They are to have four torpedo-launching tubes fitted, and will carry batteries of two 36-pounder, and four 3-pounder R. F. G.

The estimated maximum speed at load draught is 21 knots. The engines, driving twin screws, are triple expansion, and are expected to develop 4,500 I. H. P. with forced draft.

The coal capacity is 100 tons, which gives 2,500 nautical miles as the effective radius at a speed of 10 knots per hour.

The principal dimensions are: Length 230 feet, beam 27 feet; displacement at mean load draught of 8 feet 3 inches, 735 tons.

These vessels are to be built at Government yards, the first three at Devonport, the others at Chatham. The keel of the *Sharpshooter* was laid in September, 1887.

Messrs. Bellis & Co. have the contract for building the engines of the *Sharpshooter* and *Spanker* for $99,053 per vessel. Messrs. Maudslay, Sons & Field have the engine contracts for the *Salamander*, *Seagull*, and *Sheldrake* for $100,863 each, and Messrs. Laird Bros. for the *Speedwell* and *Skipjack* for $105,603 each.

RESEARCH.

(First named *Investigator*.) This is a steel side-wheel surveying vessel of 520 tons, building at Chatham.

The engines of 450 I. H. P. are to be furnished by the Barrow Shipbuilding Company.

TRAINING BRIG.

Orders have been given to build at Devonport a small wooden brig of about 500 tons, to be used as a training vessel for boys.

SPECIAL SERVICE AUSTRALASIAN SQUADRON.

At the colonial conference held in London in 1887 an agreement was made between the Government and the representatives of the Australasian colonies for the creation and maintenance of a special squadron for the protection of commerce in Australasian waters.

England agreed to pay the cost of building, arming, and equipping the vessels; but, when commissioned, the colonies undertake to defray the cost of maintenance up to a sum of £91,000 ($442,851.50) per year in time of peace. In addition, they are to pay annually the sum of £35,000 ($170,327.50) for ten years as a contribution towards the original cost of construction.

At the end of ten years the vessels will again become the exclusive property of the British Government.

In consequence there are to be built for "Special Service" Australasian squadron five protected cruisers and two torpedo vessels.

The cruisers are to have an armament of eight 36-pounder, eight 3-pounder R. F. G., and four torpedo-tubes. The estimated speed is to be 19 knots, their displacement about 2,500 tons, and their protection and general dimensions similar to the *Medea* class of vessels described on p. 244, No. VI, and in this number.

The two torpedo vessels are to be built after the *Sharpshooter* designs described above, although this may be modified and a larger type taken.

It is expected that all these vessels will be ready for service within two years from the date of order. They are all to be built by contract.

VESSELS LAUNCHED.

TRAFALGAR.

This battle-ship, designed by Naval Constructors Barnes & Morgan in 1885, was laid down at Portsmouth in January, 1886, and launched on the 20th of September, 1887.

The armament will be composed of two pairs of 13.5 inch B. L., 30 calibres long, mounted on hydraulic carriages in the two turrets and having a train of 270°. In broadside, in upper citadel, eight 5-inch B. L., or more likely six 36 pounder R. F. G. will be carried.

Eight torpedo-tubes are to be fitted.

The secondary battery will comprise eight 6-pounder and eleven 3-pounder R. F. G.

It is estimated that a speed of 16.5 knots will be realized with an I. H. P. of 12,000 under forced draft, the power under natural draft to be 7,500 horses.

The engines are by Messrs. Humphrys, Tennant & Co. There are two of the rev-

Fig. 1.

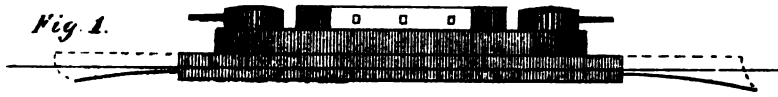

Fig. 2.

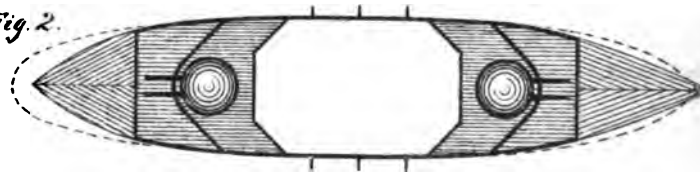

Fig. 3.

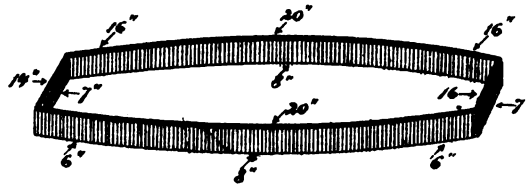

Fig. 4.

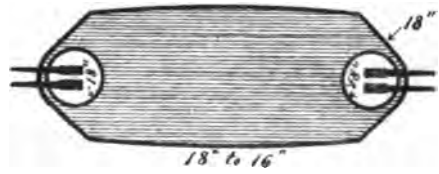

Fig. 5.

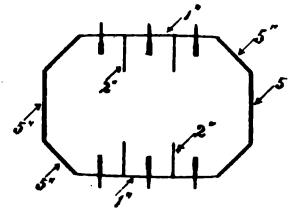

Fig. 6.

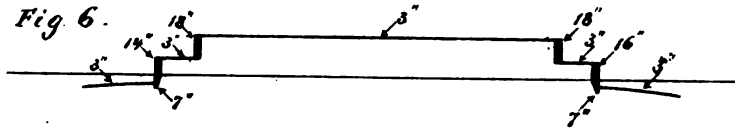

tical triple-expansion type, driving twin screws on hollow, compressed steel shafts. The diameters of the cylinders are 43, 62, and 96 inches; the length of stroke is 4 feet and 3 inches. They take their steam from six cylindrical steel boilers of the ordinary Admiralty pattern.

Between the two engine and fire rooms is a fore-and-aft tunnel 10 feet 6 inches wide, the lower part of which is used for magazines and shell-rooms and the upper for passages.

The coal-bunkers run fore-and-aft outboard of the engine and fire rooms; they are to carry 900 tons, but have a total capacity of 1,200.

The full-speed effective radius is estimated at 1,050 knots, and 5,500 when steaming 10 knots.

The armor protection consists of three structures of compound armor, Figs. 1 and 2.

The lowest, Fig. 3, consists of a water-line belt, 230 feet long at sides with athwartship bulkheads forward and aft; the thickness of armor is shown in the figure.

The middle part of this belt, for a distance of 141 feet, is carried up to form the second structure, Fig. 4. The ends of this structure are formed by parabolic shaped bulkheads which inclose the bases of the turrets; it is covered by a 3-inch steel deck. The exposed ends of the lower structure have the same protection over them, and the unarmored ends of the ship, 57 feet in length, are protected by a deck of the same thickness curving down to ram and stern. Fig. 6 shows the deck protection in section.

The third or upper structure, Fig. 5, is octagonal, 110 feet long, to contain the broadside battery; the forward and after ends have protection against raking fire, and 2-inch transverse bulkheads are run to isolate the guns and confine the damage from exploding shell to the smallest limits.

The main conning tower, above this structure, has 14 inches of armor. There are two other conning towers, but they are protected against machine-gun fire only.

The weight of the side armor is 2,454 tons. The firms of J. Brown & Co. and Cammel & Co. (Sheffield) have in hand the turrets of this vessel and of the *Nile;* their plates represent a weight of 2,000 tons. All the armor has teak backing, and a 2-inch inside skin; the total thickness of the walls of belt, citadel, and turrets is 4 feet.

The principal dimensions of the *Trafalgar* are: Length, between perpendiculars, 345 feet, and greatest beam 73 feet. When armed and equipped for sea, and with 900 tons of coal on board, she is to draw 27 feet forward and 28 feet aft, which will give her a displacement of 11,940 tons.

The hull is built on the longitudinal principle; the framing is exceptionally strong, all parts of mild steel. The double bottom, 3 feet 4 inches deep, has forty water-tight compartments; the total number of such compartments in the ship is nearly one hundred and fifty.

The stem is of cast steel, and the ram is strengthened by a horizontal prow of 5-inch steel plates.

The armored conning tower is provided with steering gear, speaking-tubes, gun and torpedo indicators, and electric connections, placing everything under the immediate control of the captain. From the two side conning towers the vessel can be steered, but the turret guns only can be fired from these positions.

The military mast will have two tops. Four electric search-lights will be carried, and the interior is to be lighted by 460 incandescent lamps. Artificial ventilation will be introduced into all living spaces.

A complement of about 520 officers and men will be carried.

The construction thus far has been carried on in a remarkably rapid manner, and it is expected to have the vessel ready for sea during the fiscal year 1889–'90.

NILE.

This vessel is in all respects a sister ship to the *Trafalgar*. Her keel was laid at Pembroke in April, 1886, and she was launched on the 27th of March, 1888. It is

estimated that she will be finished in 1890. The engines are by Maudslay, Sons & Field, and will be put in at Portsmouth, where the ship is to be completed.

MEDEA—MEDUSA.

Fast, unsheathed, protected cruisers described on page 244, No. VI. The armored coamings mentioned are of 5-inch steel and placed at an angle of 25 degrees around the engine-room and above the 2-inch protective deck.

Both vessels were laid down in April, 1887, at Chatham. The *Medea* was launched on the 9th of June, 1888, and the *Medusa* is expected to take the water in August, 1888.

MARATHON—MAGICIENNE.

These are sister ships to the above, except that they are sheathed and have horizontal instead of vertical engines. They are described on the same page in No. VI.

Both are building at the yard of the Fairfield Shipbuilding and Engineering Company, at Govan; the contract price for hulls is $315,301 per vessel. The *Magicienne* was launched on the 12th of May, 1888.

The triple-expansion engines for both vessels are built by the firm of Hawthorn, Leslie & Co., at Newcastle. The diameter of the cylinders are 34.5, 51, and 76.5 inches; the length of stroke 36 inches. They are to drive 3-bladed twin screws at 150 revolutions per minute. Estimated I. H. P., 9,000. Contract price, $247,335 each.

Steam is taken at 155 pounds pressure from four double-ended cylindrical boilers having a heating surface of 14,070 square feet, and a grate surface of 456 square feet in twenty-four corrugated furnaces.

DAPHNE.

Composite sloop of *Buzzard* type, mentioned on p. 244, No. VI, was launched at Sheerness on the 28th of May, 1888.

The armament will be eight 5-inch B. L. and eight machine guns. The engines are triple expansion, furnished by Scott & Co., Greenock.

NYMPHE.

Sister ship to *Daphne*. Her keel was laid at Portsmouth in July, 1887; she was launched on the 1st of May, 1888.

The contract for building the engines was given to Scott & Co., of Greenock.

MELITA.

This vessel, a sister ship to the *Reindeer* and *Icarus*, described on p. 197, No. V, was launched at Malta on the 20th of March, 1888. She was laid down in July 1883.

It is expected that she will be completed during the fiscal year 1888–'89.

PHEASANT—PARTRIDGE—PEACOCK.

The first of these vessels, described on page 245, No. VI, was launched at Devonport on the 10th of April, 1888. The *Partridge* was launched at the same yard one month later, and the *Peacock* at Devonport on the 22d of June, 1888.

GRASSHOPPER—SANDFLY—SPIDER.

Torpedo vessels, partially described on p. 196, No. V.

Their armament consists of one 4-inch B. L. on Vavasseur central-pivot carriage behind a steel screen in bow, six 3-pound R. F. G., and four torpedo tubes, one bow, one stern, and one in each side.

The estimated speed is 19 knots. The engines were built by contract with Maudslay Sons & Field, of London. They are the same as those put in the sister ship *Rattlesnake*, given on pp. 293 and 255, No. VI.

These vessels were not laid down when originally intended. The keels of first and second were laid in April, 1886, and of *Spider* in June following. They were launched on August 30, September 30, and October 17, 1887, respectively.

They are built of steel; have poop and forecastle, bridge, and conning tower; will carry two signal masts, and will be furnished with an electric search light.

The cost of each vessel, completed for sea, is estimated to be $175,200.

ERNEST.

This vessel was launched at Sheerness on March 27, 1888, after being housed in for two years.

She is one of the steel-plated river gun-boats that were intended for special service on the Nile and begun some years ago.

STEAM TRIALS.

In nearly all cases the trials of the engines were made in four-hour runs, one with natural draft and one with forced, and the mean results of each were taken.

Although this is a great improvement over the measured mile trials, these results could hardly be approximated afterwards in service.

The new regulations are eminently practical. The vessels will be taken out of port under easy steam and gradually worked up to full natural draft power, and kept running at that for ninety-six consecutive hours, the blowers being used only for ventilating purposes.

VICTORIA.

This battle ship is described on p. 247, No. VI, and (under the name of *Renown*) on p. 111 of No. IV, and pp. 42, 43 of No. V.

On the 7th of April, 1888, she left the Tyne, arrived at Sheerness on the 9th, and was taken out for a four-hour natural-draft trial on the 12th of June, with weights on board to bring her down to designed load draught of 26 feet 3 inches forward, and 27 feet 3 inches aft.

The mean boiler pressure was 131 pounds and the results for starboard and port engines were: Vacuum 27.8 and 26.8 inches, revolutions 87.3 and 88.5, I. H. P. 3,856 and 4,182, a total I. H. P. of 8,035. The mean speed by patent log was 16 knots. During this trial the blowers were running, but the fire-rooms were open.

The forced-draft trial on the 14th of June, 1888, was equally successful. The pressure in fire-room was 1.97 inches, the steam pressure in boilers 133.4 pounds, the vacuum for starboard and port engines 27.4 and 27 inches, revolutions 101.26 and 100.37, I. H. P. 7,107 and 7,137; giving a total of 14,244 I. H. P., or 2,244 above the contract requirement; the highest power developed during the four hours was 14,500. A mean speed of 17.25 knots was reported.

The contract price for machinery was $476,917, and a handsome bonus was promised for every I. H. P. above 12,000. The contractors are Messrs. Humphreys, Tennant & Co.; they are also building the engines for the *Victoria's* sister ship the *Sans Pareil*.

IMPÉRIEUSE.

This vessel is described on pp. 74, 198, and 199, No. V, also on p. 247, No. VI. After the removal of her original masts and the substitution of a single one with military top and alterations in position of torpedo tubes, she was prepared for commission as flag-ship of the China station.

On the 24th of March, 1888, when ready for sea with 900 tons of coal on board, she had a three-hours' continuous steam trial under natural draft; the blowers were running, but the fire-rooms were open.

The mean pressure in the boilers was 85.79 pounds. The data for starboard and port engines were: Revolutions 78 and 78.5, vacuum 27 and 26 inches, I. H. P. 3,478.6 and 3,500.6, total 6,979.2. The average measured mile speed was 16 knots.

The draught of water was 25 feet 10 inches forward and 28 feet 9 inches aft, mean 27 feet 3.5 inches. As 200 tons more coal are carried, or a total of 1,100, she has a mean draught of 27 feet 9 inches, which brings the top of armor belt awash. With 400 tons of coal her mean draught would be about 26 feet.

On account of her great draught of water she could not go through the Suez canal, and had to steam to her station by way of the Cape of Good Hope.

ORLANDO.

The first of the armor-belted cruisers, described on p. 112, No. IV, p. 79, No. V, and p. 248, No. VI, was finished in March, 1888, commissioned in May, and had preliminary trials before proceeding to her station (Australia).

The contractor's trials under natural and forced draft are given on p. 251, No. VI, and a comparison will furnish data of use in considering the performances of the others of her class.

The vessel had her complete complement (455), her stores, and coal on board and started out on the 5th of June, 1888, drawing 20 feet 3 inches forward and 24 feet 6 inches aft (at contractor's trial she drew 19 feet 9 inches forward and 22 feet aft).

The first trial was with one-third power. Four runs were made over the measured mile with the following mean results: Steam pressure 128 pounds, vacuum 26.5 inches, revolutions 84.3, I. H. P. 3,018, speed 13.8 knots.

The second trial, at two-thirds power, same conditions, gave: Steam 128 pounds, vacuum 26.5 inches, revolutions 102, I. H. P. 5,227, and a speed of 16 knots.

The third trial, four runs as above, at full power under forced draft, with a mean boiler pressure of 125.7 pounds, gave the following data: Starboard engine, pressure in cylinders, 33.9—24.3—15, vacuum 26.5, revolutions 112.3, I. H. P. in cylinders 822—1,229—1,707=3,758. Port engine, pressure in cylinders, 35.8—23.3—14, vacuum 27, revolutions 112.6, I. H. P. 870—1,182—1,597=3,649, or a total I. H. P. for both engines of 7,407. Speed 17.14 knots.

The fuel was ordinary cruising coal and was handled by the firemen of the crew.

UNDAUNTED.

Sister ship of belted cruiser *Orlando* built and engined by same contractors, Palmer & Co.

The two engines are triple expansion, the diameters of cylinders being 36, 52, and 78 inches, the stroke 42 inches. The condensing surface is 12,000 square feet. The two screws have a diameter of 14 feet and 6 inches, and a pitch of 18 feet 9 inches.

There are four cylindrical double-ended boilers of 14 feet 6 inches diameter and 16 feet 6 inches length, having 24 corrugated furnaces with 540 square feet of grate surface; the heating surface is 16,055 square feet.

On the 5th of July, 1887, the *Undaunted* had a successful four-hour trial trip with natural draft. Weights were put on board to bring her down to designed load line, the draught being 20 feet forward and 22 feet aft. The boiler pressure was 122.5 pounds, and the mean results for starboard and port engines were: Revolutions 104.4 and 106.8, vacuum 25.7 and 25.3; the steam in the high-pressure, intermediate, and low-pressure cylinders was 35.6—18.8—9.6 and 35.6—21.3—10.1 pounds. The I. H. P. developed by them was 802—886—1,011=2,699 for starboard, and 821—1,027—1,093=2,941 for port engine, or 5,640 total; the highest figure reached was 5,889. The speed by patent log was 16.8 knots, and the consumption of coal per I. H. P. was reported as slightly over 1.75 pounds.

The four-hour trial trip with forced draft was made on the 8th of July, the conditions being the same as above.

The mean steam pressure in the boilers was 127 pounds; the revolutions starboard and port 119.3 and 120.8, vacuum 25 and 25.5 inches, pressure in cylinders 37—22.7—16.3 and 40.1—25.9—15.9; the I. H. P. was 4,204 starboard, and 4,398 for port engine; total, 8,602. The highest I. H. P. obtained was 9,020. The mean speed was 18.7 knots. A run was made over a measured mile at the end of the four-hour trial at a speed of 19.4 knots.

AUSTRALIA—GALATEA.

Sister ships to the above. These vessels are engined by Napier. The diameters of the cylinders are less than in the other five of class, being 35, 51, and 77 inches, but the length of stroke is increased to 44 inches. The pitch of the screws is 19 feet 6 inches in the *Australia*, but was increased to 23 feet 3 inches in the *Galatea*. The total weight of machinery is 770 tons. The dimensions of the four cylindrical double-ended boilers are: Length, 16 feet 9 inches; diameter, 14 feet 8.25 inches; grate surface 500 square feet. The *Australia*, on the 3d of October, 1887, developed with natural draft 5,800 horse-power, and, on the 7th, a maximum of 9,130 with forced draft; the mean for four hours in latter case was 8,876 with 132 pounds of steam in boilers and 123 revolutions. The speed was 18.8 knots.

The *Galatea* did better with a less number of revolutions. Her natural draft trials took place on the 9th of November, 1887, in the Solent, between Stokes' Bay and Warner light-ship for four hours; during which four runs, with and against the tide, were made over a measured mile. She was drawing 19 feet 5.5 inches forward and 22 feet 5.5 inches aft, or about half an inch less than her designed load draught. The mean boiler pressure was 129.8 pounds, and the data for the starboard and port engines were: Revolutions, 101.26 and 101.05; vacuum, 28 and 27.46; steam pressure in cylinders 42.55—20.51—10.1 and 46.61—20.72—9.15. The I. H. P. developed by starboard engine was 2,941.94 and by the port 2,926.04; total by both, 5,867.98. The mean speed attained was 17.34 knots, with a consumption of coal per I. H. P. of 2.31 pounds.

Forced draft trials were made two days after; the conditions were the same as above. The air pressure in the fire-rooms was 1.5 inches of water; the mean boiler-pressure, 138 pounds; number of revolutions, 114.48 by starboard and 112.67 by port engine; vacuum, 26.67 and 27.71; steam pressure in cylinders, 58.9—30.5—14.9 and 58.2—27.6—13.6. The I. H. P., starboard, 4,794.84, port, 4,410.11; total by both engines 9,204.95. The highest horse-power developed was 9,664.5.

The speed was 19 knots, with a consumption of coal stated as 1.97 pounds per I. H. P.

The steam steering gear was tested, and some turning trials were made before the regular four-hour trials. The starboard circle was made in 3 minutes and 40 seconds, and the port in 3 minutes and 28 seconds, with 357 and 359 revolutions respectively. The diameter of the circle in each case was 1,764 feet. The rudder area is 160 square feet.

NARCISSUS.—IMMORTALITÉ.

These vessels are sister ships to the foregoing, and have been described with them. Their engines were designed and furnished by the Earle Ship Building Company, and are of the same type as the others of class, horizontal triple-expansion.

The cylinders are 36, 52, and 78 inches in diameter, and the length of stroke is 3 feet 6 inches.

The grate surface is 534 square feet, the boilers being 17 feet 6 inches long and 14 feet 6 inches in diameter.

The *Narcissus* had a successful natural draft trial in September, 1887, and developed 5,300 horse-power (contract 5,000), but this was followed by numerous failures to obtain the contract requirement of 8,500 I. H. P. with forced draft.

The boilers in these trials furnished more steam than the engines could take; most of the latter trials had to be stopped inside of the four-hour limit on account of hot bearings.

On the 8th of February, 1888, a successful four-hour trial showed a mean I. H. P. of 8,574, with a boiler-pressure of 131 pounds, vacuum 25 inches, and 114 revolutions. The highest horse-power developed during the run was 8,827. The speed was reported as 18.5 knots.

The *Immortalité* had a successful natural draft, four-hour trial, on the 1st of March, 1888. The draught of water was 19 feet forward and 22 feet 6 inches aft, mean 20 feet 9 inches, or 3 inches less than designed load draught. The boiler pressure was 124.8 pounds, number of revolutions 106, vacuum 24 inches, I. H. P. 6,090. A maximum speed of 18 knots is claimed. The blowers were used, but the fire-rooms were not closed.

On 3d of March she had a forced draft trial for four hours, which was also successful. The draught of water was the same as before. The mean pressure of steam in boilers was 126.5 pounds, the vacuum in starboard condenser was 22.7, and in port 22.4; number of revolutions, 113 and 117; the I. H. P. was, starboard 4,254, port 4,481, total 8,735, and the maximum speed was reported as 19.5 knots.

AURORA.

The seventh of the *Orlando* class was launched on the 28th of October, 1887, at Pembroke, where her keel was laid on the 1st of February, 1886. In November, 1887, she was towed to Devonport, to have her engines put in by the contractors, Messrs. J. & G. Thomson, of Clydebank. These are of the thorizontal triple expansion type, designed to develop 8,500 I. H. P. with forced draft. The diameters of the cylinders are 36, 51 and 78 inches; the length of stroke, 42 inches. Steam is to be furnished at 130 pounds pressure by four double-ended boilers, having a heating surface of 15,832 square feet and a grate surface of 455 square feet, or one square foot per 18.7 estimated horse-power.

On May 22, 1888, the vessel had a satisfactory dock-trial, and on the 18th of June a four-hour trial under natural draft, *i. e.*, with open fire-rooms, with the following mean results: Pressure in boilers, 125 pounds; pressure in cylinders of starboard engine, 37.7—18.7—9.8 pounds; port engine, 40.3—16.7—11.1; vacuum, 25 inches; revolutions, 106.7 and 106; I. H. P., 870—863—1,061=2,794, and 923—766—1,187=2,876, or a total mean I. H. P. of 5,670; the highest developed was 5,813. The speed by patent log was 17.25 knots. The consumption of coal per I. H. P. is given as 1.9 pounds.

At this trial the draught of water was 19 feet 8 inches forward and 21 feet 10.5 inches aft.

On the 20th of June the *Aurora* was taken out for a full speed contractor's trial under forced draft drawing 19 feet 6 inches forward and 22 feet 6 inches aft, the designed load draught.

The mean results of the four hour run were: Boiler pressure, 136 pounds; pressure in cylinders, starboard, 43.4—27.7—14.2; port, 45.5—28.5—15.5 pounds; vacuum, 25 and 24.6 inches; revolutions, 121.4 and 119.4; I. H. P., 1,137—1,455—1,750=4,372, and 1,172—1,474—1,874=4,520; a total I. H. P. for both engines of 8,862, or 362 above the contract figures. The highest I. H. P. reached was 9,181.

The speed by patent log was 18.53 knots; air pressure in fire-room, 1 inch; cosumption of coal per I. H. P., 1.8 pounds.

FORTH.

Described on pp. 195 and 196, No. V, and referred to on p. 248, No. VI. The natural draft trial took place on the 19th of September, 1887; the vessel was light, drawing 13 feet 11 inches forward and 17 feet 11 inches aft (load draught 16 feet forward 20 feet aft). During the four hours the mean pressure in boilers was 97 pounds; in the cylinders of starboard engine, 37.7 and 16.8; in those of the port, 35.8 and 15.2; the vacuum in the condensers was 26.25 and 26.5; number of revolutions, 101.5 and 101.2; I. H. P., starboard, 811 and 1,048=1,859; port, 768 and 951=1,719; total mean I. H. P., 3,578; the highest power reached was 3,971, and gave 105 revolutions.

The mean speed was 15.6 knots by patent log. The consumption of coal per I. H. P. was 2.5 pounds.

After two failures, she was successful with forced draft on the 12th of October, 1887. The draught was 13 feet 10 inches forward and 17 feet 10 inches aft, or 1 inch less than on previous trial.

The mean results for four hours were: Pressure in boilers, 108 pounds; in cylinders, starboard, 56.3 and 21.7, port, 53.3 and 21.4; vacuum, 23.8 and 24.5; revolutions, 116.8 and 116.5; I. H. P. starboard, 1,327 and 1,555=2,882, port, 1,320 and 1,542=2,862; total, 5,744.

The highest horse-power during trial was 6,010, the number of revolutions at that time being 118.4.

The speed by patent log was 17.33 knots.

BUZZARD.

A composite cruiser, described on p. 194, No. V; her launch is mentioned on p. 248, No. VI.

This vessel was expected to steam 15 knots with an I. H. P. of 2,000. After several failures, the engines developed 2,090 horse-power, but the speed was only 14.1 knots, and it has not since been possible to reach the estimated figures; the highest speed made at a subsequent time was 14.5 knots.

SERPENT.

Torpedo vessel of *Archer* class described on pages 85, 86, and 139, No. V, and mentioned on page 249, No. VI.

The *Serpent* had a four-hour trial with natural draft on the 18th of January, 1888, drawing 12 feet 6 inches forward and 14 feet 6 inches aft, her designed load draught.

The mean boiler pressure was 133 pounds, the pressures in the three starboard cylinders were 38.9—17.7, and 7.6; in the port, 37.1—16.7, and 7.3; I. H. P., starboard, 465—420, and 426=1,311; port, 433—396, and 409=1,238; total I. H. P., 2,549. The vacuum in condensers was 23.2, and the average number of revolutions 131.8 per minute. The highest horse-power developed during the four hours was 2,674, and the trial was satisfactory as far as the performance of the engines was concerned; but the speed, 14.57 knots, was less than expected.

On the 23d of May, 1888, the vessel was taken out for a four-hour contractor's full speed trial under forced draft. Draught of water forward, 12 feet 6 inches; aft, 14 feet 6 inches. The mean results were: Pressure in boilers, 129 pounds; in cylinders, starboard, 41.9—31.2—11.6; port, 36.6—31.4—11.1; vacuum, 24 and 25.4 inches; revolutions, 148.4, both engines; I. H. P., 549—831—734=2,114, and 540—803—702=2,045; a total I. H. P. for both engines of 4,159 (contract 4,500). The highest I. H. P. developed during the trial was 4,484, or 16 below contract. The speed by patent log was 16 knots.

RACOON.

Sister ship to the above, did a little better. She had a natural-draft trial in May, 1888, drawing 12 feet 6 inches forward and 14 feet 6 inches aft. The mean results of the four-hour run were as follows: Boiler pressure, 121 pounds; steam in cylinders, starboard engine, 33.5—19.8—8.0; port, 32.7—20.2—7.4 pounds; vacuum, 23.4 and 25 inches; revolutions, 133.8 and 136; I. H. P., starboard, 395—474—457=1,326; port, 393—491—429=1,313; total I. H. P., 2,639. Speed by patent log, 14.8 knots.

On the 13th of June, 1888, the *Racoon* had a full-power trial under forced draft; draught of vessel as above. The mean results were: Boiler pressure, 127.7 pounds; pressure in cylinders, starboard engine, 42.2—29.7—11.7; port engine, 43.0—30.2—10.8; vacuum, 23.5 and 24.6; revolutions, 156 and 158; I. H. P., 2,197 and 2,290; total I. H. P., 4,487. Speed by patent log, 17.4 knots.

During the last half hour of trial the eccentric rod of port engine broke, and the trial was discontinued.

FRANCE.

The ship-building policy was more or less varied by each of the Ministers of the Marine who, in turn, was called to take office during the last year.

According to the latest programme, speed, by a former minister considered paramount, is to be given prominence in the new designs of war-ships, but is not to be the only element considered at the expense of other features demanding attention. The return to side-armor protection is noted in two vessels ordered to be laid down.

A system of valuation of the fleet is adopted, which, instead of carrying on from year to year a vessel's first cost of construction, takes into consideration the depreciation in value on account of wear, loss of speed, type becoming obsolete, etc.

As a basis the life of a wooden or composite ship is placed at eighteen years, and that of iron ships at thirty; torpedo vessels and boats are considered efficient only for fifteen years.

This yearly depreciation of each vessel is, of course, affected by repairs of a nature calculated to improve or maintain her efficiency.

Under these conditions the French fleet, of 378 vessels, was valued in January, 1888, at 317,000,000 francs ($61,181,000.)

VESSELS PROPOSED OR LAID DOWN.

BRENNUS.

The original vessel under this name was laid down at L'Orient in 1885, but work on her and her sister ship, the *Charles Martel*, was given up soon after.

In the construction of the new *Brennus*, as much as possible of the material on hand for the original is to be utilized; she is to be built at the same yard on designs that allow for protection against mélinite and other high explosive shell.

The armament is to include at least three 34-centimetre (13.4-inch.) B. L. in turrets or barbette towers, ten 16-centimetre (6.3-inch.) B. L., and several torpedo tubes. The secondary battery is to comprise four 65-millimetre (9-pounder), eight 47-millimetre (3-pounder) R. F. G., and eight 37-millimetre H. R. C.

With forced draft the speed is to be over 18 knots. The coal capacity will give an effective radius of 4,000 miles at 10 knots speed.

There will be a complete water-line belt, 6 feet high, of steel or compound armor, 17.7 inches thick amidships, tapering towards ends; the armor on conning tower and turrets or barbette towers is also to be 17.7 inches thick. The 6.3-inch guns will have protection against light guns and shells charged with high explosives.

The armor belt is surmounted by a protective deck with a minimum thickness of 2.33 inches.

To further insure the vessel's floating power under fire a complete coffer-dam near water line is filled with obturating material.

The estimated cost of this battle ship is over $3,000,000.

DUPUY DE LÔME.

The design of this vessel, described on page 256, No. VI, as a cruiser to be built on plans of M. Thibaudier, has been abandoned.

The present design is by M. de Bussy and is made with the object of furnishing protection against projectiles charged with high explosives.

The proposed armament is two 19-centimetre (7.48-inch.) B. L. on sponsons, one on each side, and six 16-centimetre (6.3-inch.) B. L. The arrangement of battery is to be such as to allow a fire of five guns ahead, astern, or abeam. Four torpedo tubes will

be fitted. The secondary battery is to comprise two 65-millimetre (9-pounder) and four 47-millimetre (3-pounder) R. F. G., and eight 37-millimetre H. R. C.

A speed of 20 knots is to be realized under forced draft, and 17.5 with natural; triple expansion engines of 14,000 I. H. P. are to drive three screws; the effective radius at 12.5 knots' speed is estimated at 4,000 miles.

This vessel is to be built at Brest, entirely of steel; she is to have a complete armor belt of 10-centimetre (3.94-inch.) maximum thickness amidships and side-armor of same thickness in wake of the battery. A complete protective deck is to be fitted, and below it a splinter deck over vital parts. Above the protective deck is a coffer-dam or belt of cellulose or other obturating material, 1 metre (3.28 feet) high. There will be thirteen principal, and a large number of small, water-tight compartments.

The principal dimensions are to be: Length, 374 feet; beam, 52 feet, and displacement, 6,297 tons at a mean draught of 23 feet 3 inches.

The complement to be about 400 officers and men. It is expected to complete the vessel in three years and a half, at an estimated cost of about $2,000,000.

VESSELS LAUNCHED.

FORBIN.

This third-class cruiser, described on page 202, No. V, was launched on the 14th of January, 1888, at Rochefort. She is to be completed during this year.

LÉZARD—CIGOGNE.

Two side-wheel river gun-boats built at Paris by the Société Anonyme des Anciens Établissements, Cail. Their armaments are two 65-millimetre (9-pounder) R. F. G., and two 37-millimetre H. R. C.

The principal dimensions are: Length at load water-line, 111 feet 6 inches; beam, 18 feet; displacement, 130 tons at a mean draught of 4 feet. The I. H. P. of engines is 200.

The *Lézard* was taken to L'Orient and the *Cigogne* to Cherbourg yard to be completed.

RANCE.

This transport is described on page 260, No. VI. She was commenced in May, 1883, at L'Orient, and launched on the 27th of March, 1888.

The machinery was constructed in the Government works at Indret; the engine, of the vertical compound two-cylinder type, is estimated to develop 745 I. H. P. Two cylindrical boilers will furnish steam.

CÉCILLE.

This first-class steel protected cruiser, built by the Forges et Chantiers de la Méditerranée, La Seyne, on the plans of their chief constructor, M. Lagane, was launched on the 3d of May, 1888.

The contract for building was given out on the 23d of November, 1885, and the stipulated time for completing the vessel was thirty months from that date; it is now expected that she will be delivered to the Government in November, 1888.

The terms for the contract allow a premium of 10,000 francs ($1,930) for every hundredth of a knot over nineteen made on a load draught speed trial, but exact a forfeit of the same amount for every hundredth of a knot the vessel falls short of that speed.

The contract price (exclusive of armament) is $1,416,620.

The complement to be carried is fixed at 486 officers and men.

A description of the *Cécille* will be found on pages 80 and 202, No. V.

MELPOMÈNE—ANDROMÈDE.

The keels of these sailing vessels were laid in August, 1882, the first at Rochefort the second at L'Orient.

Both are intended for training-vessels. Their batteries are 5.51-inch B. L., of which eight are carried in broadside. In the tops four 37-millimetre H. R. C. will be mounted.

Their principal dimensions are: Length, 175 feet; beam, 45 feet; depth, 23 feet; displacement, 2,000 tons.

The cost of each vessel, including armament, is $270,780. A crew of 500 can be carried.

The *Melpomène* was launched on the 20th of August, 1887.

GABRIEL CHARMES.

This boat, described on p. 259, No. VI, was found, on trial, to be unsatisfactory as a gun-vessel and was turned into a torpedo-boat.

MOGADOR—CHANZY.

When Admiral Aube left the office of Minister of Marine his successor cancelled the contracts for these vessels (described on pp. 256 and 257, No. VI), not deeming the available appropriation sufficient to carry out in full his predecessor's programme.

STEAM TRIALS.

These take place over a course of 6 miles in trials of new vessels for mile speeds; but after completion each vessel laid up is to be taken out for steam trials once during the summer, and the vessels composing the Mediterranean or evolutionary squadron have a yearly speed trial.

The trial on the 25th of September, 1887, was for four consecutive hours between the Gulf of Juan and Toulon. The following vessels were in the race: Battle-ships, *Courbet*, 15.6 knots per hour; *Redoutable*, 15 knots; *Amiral Duperré*, 14 knots; *Indomptable*, 13.5 knots; *Dévastation*, 13.5 knots; *Colbert*, 12.5 knots; cruisers, *Sfax*, 17.5 knots; *Milan*, 16.5 knots; *Hirondelle*, 12.5 knots; the torpedo vessel *Couleuvrine* made 17 knots.

In May, 1888, a 24-mile run was made near Toulon with the following results: Of the battle-ships the *Courbet* led again, this time making 15 knots, and was followed by the *Redoutable*, 14 knots; the *Admiral Duperré*, 14 knots; *Dévastation*, 13.5 knots; *Indomptable*, 13.4 knots; *Colbert*, 13 knots.

The torpedo vessel *Condor* made 16 knots, but was beaten by the *Bombe* going 18; the starboard boiler of this vessel exploded, fortunately without hurting anyone.

ITALY.

VESSELS PROPOSED OR LAID DOWN.

The building programme of the Minister of Marine proposes a gradual increase during the next ten years to a strength of 313 effective vessels in 1898.

One armored vessel will be added to the 15 already in service or under construction.

The number of protected cruisers will be augmented by nine of the *Etna* and *Dogali* types (p. 203, No. V, and p. 265, No. VI); one of the former is now building at Leghorn and one of the latter at Castellamare. Three more *Dogalis* are to be commenced this year.

Eighteen torpedo cruisers of the *Tripoli* type (p. 204, No. V) are to be built, three of which are under way and three are to be laid down soon. Of the smaller class of torpedo-vessels (*Folgore* type, see same page) 10 are to be built, one is building at Castellamare, and three more are to be laid down soon.

Only six gun-vessels are in the programme; they are to be of an improved *Veniero* type, more like the *Archimede* and *Galileo*, described on page 264, No. VI. Two of these are building.

The usefulness of the *America* (p. 265, No. VI) is acknowledged by the proposal to build two more first-class torpedo-depot vessels. The dependence of a fleet on transports for coal, stores, and ammunition is recognized by a proposed increase of three supply-vessels of the second class. An English steamer of 1,380 tons was purchased for this purpose, and named the *Garigliano* in October, 1887.

Two heavy sea-going tugs are also in the programme, besides 73 sea-going torpedo-boats and 100 torpedo-launches.

VESSELS LAUNCHED.

MONZAMBANO—MONTEBELLO.

The two torpedo-vessels, *Tripoli* class, mentioned on page 264, No. VI, were launched at Spezia on the 14th of March, 1888.

STEAM TRIALS.

LEPANTO.

A sister ship of the *Italia*, but unsheathed, and having instead of the 26 horizontal return-tubular marine boilers only 8 of that pattern and 16 of the two furnace-locomotive type.

On the 14th of May, 1888, this vessel had her final speed trials, when she made 18.4 knots, with an I. H. P. of 15,840, *i. e.*, 2,160 less than the H. P. called for in the contract with the builders of the machinery, Messrs. Penn & Son, of Greenwich.

GERMANY.

VESSELS PROPOSED OR LAID DOWN.

ARMORED GUN-VESSEL.

A contract has been made with the Germania Works at Gaarden, near Kiel, to build for 3,500,000 marks ($833,000) the first of the 6 armored gun-vessels mentioned on page 266, No. VI, as designed for the protection of the mouths of German rivers and of the proposed canal between the Baltic and North Seas. She is to be completed in sixteen months.

PROTECTED CRUISER.

A sister ship to the *Irene* and *Prinzess Wilhelm*, described below, is to be laid down this year.

TWO COMPOSITE CRUISERS.

A vessel in all respects like the *Schwalbe* (for description see below) is building on the same ways at Wilhelmshaven, and will probably be launched in August, 1888. Another of this type is ordered to be laid down.

DESPATCH VESSEL.

A sister vessel to the *Wacht*, described further on, is ordered to be laid down.

VESSELS LAUNCHED.

IRENE—PRINZESS WILHELM.

These vessels are protected cruisers designed by the German Admiralty and built by contract. The former was laid down at Stettin by the Vulcan Company in April, 1886, and launched in July, 1887; the latter was built by the Germania Works at Gaarden, near Kiel; she was begun in August, 1886, and launched in September, 1887.

Each is armed with fourteen 5.91-inch (15-centimetre) B. L. Krupp guns, eight of them 22 calibres long and six of 30 calibres; the former are in broadside ports, and the latter on sponsons, four with bow and two with stern fire.

A torpedo tube is fixed in the stem, below ram. The secondary battery is composed of six H. R. C. of 37 millimetres.

The contract requires a speed of 18 knots for six consecutive hours, and an I. H. P. of 8,000 for the engines, which are designed by the contractors. They are horizontal compound, placed in separate water-tight compartments and drive twin screws. Steam is taken from four cylindrical double-ended boilers; those of the *Irene* have three, and the *Prinzess Wilhelm's* have four furnaces each.

The normal coal capacity is 600 tons, but bunker space is available for 900.

The hulls are of steel, wood-sheathed and coppered below water. A complete turtle-back protective deck of mild steel is fitted, having a minimum thickness of 0.8 inch, and a maximum of 3 inches over vital parts. All hatches, etc., cut through this deck have armored coamings and are surrounded by cofferdams.

The berth deck is 3 feet above the protective deck; the space between them is subdivided by numerous bulk-heads, forming three fore-and-aft rows of water-tight compartments. Those nearest sides are packed with cork and glue, forming a belt 4 feet, 5 inches thick; the midship compartments are filled with coal or patent fuel; two fore-and-aft passage-ways separate the rows. On the berth deck the midship coal-bunkers are run up on, and across the fore-and-aft line over machinery space.

The principal dimensions are: Length, 308 feet 5 inches; beam, 45 feet 11 inches; displacement, 4,400 tons, with a mean draught of 21 feet.

The vessels will have two military masts, poop and forecastle, and a bridge with a 2-inch steel conning tower, from which 4-inch tubes, 2 feet in diameter, lead below.

The complement will be about 320 officers and men.

The contract price for hull and machinery is $952,000.

SCHWALBE.

A composite cruiser, intended for service on the African coast.

She was laid down at Wilhelmshaven in November, 1886; launched on August 16, 1887; and completed in May, 1888.

The armament is composed of 10.5-centimetre (4.13-inch) Krupp B. L., four in each broadside, the forward and after guns being on sponsons. As secondary battery, four 37-millimetre H. R. C. are carried.

For motive power she has compound engines of 1,500 I. H. P., driving twin screws. Steam is furnished by four cylindrical boilers. The coal capacity is placed at 300 tons.

The principal dimensions are: Length, 203 feet 5 inches; beam, 30 feet 8 inches; depth, 18 feet 4 inches; mean draught, 14 feet 5 inches; displacement, 1,120 tons.

One hundred and fourteen officers and men will be the vessel's complement.

WACHT.

This steel despatch vessel, designed by the German Admiralty, was built under contract by the Weser Company for 1,500,000 marks ($357,000). She was launched on the 27th of August, 1887.

Three 10.5 centimetre (4.13-inch) Krupp B. L., 35 calibres long, will be carried, two on sponsons forward, and one in pivot on the poop with a train of 260 degrees. A torpedo tube will be fixed in stem under spur, and one training tube will be fitted above water on each beam.

The secondary battery will number ten 37-inch H. R. C.

A speed of 19 knots is expected by developing under forced draft an I. H. P. of 4,000 in the two triple-expansion engines. These engines are in two separate water-tight compartments and work three-bladed screws. In the two fire-rooms, separated by water-tight bulkheads, are four locomotive boilers.

The principal dimensions are: Length, 278 feet 10 inches; beam, 31 feet 6 inches; depth, 17 feet 7 inches; displacement, 1,240 tons at a mean draught of 13 feet 9 inches.

The vessel is provided with a complete steel protective deck 1.2 inches thick, increased to 2.36 inches over machinery.

An electric search-light of 20,000 candle power is to be carried.

The complement is fixed at 126 officers and men. The vessel was turned over to the Government on her arrival at Wilhelmshaven on the 14th of April, 1888.

EBER.

This name was given to a small gun-boat launched at Kiel on the 15th of February, 1887, completed during the year, and sent to the Australian squadron.

She carries an armament of three light guns—two forward, one on poop.

The I. H. P. developed on trial by her compound engine was 700.

The displacement is 570 tons; the hull is of iron. A considerable amount of sail is carried, the vessel being bark-rigged. The complement is 87 officers and men.

The total cost of the gun-boat was $145,000.

STEAM TRIAL.

GREIF.

The despatch vessel of that name, described on page 266, No. VI., was taken from Gaarden to Wilhelmshaven in June, 1888. She is reported as having reached a speed of 23 knots during that trip.

RUSSIA.

VESSELS PROPOSED OR LAID DOWN.

The principal activity of the Russians is shown in the Black Sea establishments.

At Nicolaiff two more iron-clads of the *Tchesme* type are ordered to be built. They will have a displacement of about 8,000 tons. One will be constructed by the Government and one by the new ship-building company (Kundishev Volodin) at their yard.

A further addition to the Black Sea fleet is ordered of four third-class cruisers of *Terretz* class, described on page 268, No. VI.

The construction of a fleet of twenty new vessels for the Caspian is also ordered. They are to have displacements varying from 500 to 1,000 tons. Some are to be built in Russia and some in England and Sweden.

At the Admiralty Works, St. Petersburg, an armored vessel is to be laid down. The principal dimensions are: Length, on water-line, 287 feet; beam, 62 feet; displacement, 6,600 tons, at a mean draught of 21 feet.

STANDARD.

A new Imperial yacht by that name was laid down in 1887 at the Baltic Engineering Works on the Neva, near St. Petersburg. The estimated speed is 16 knots, with an I. H. P. of 6,000.

The principal dimensions are: Length, 314 feet 10 inches; beam, 46 feet; depth, 15 feet; displacement, 3,346 tons.

VESSELS LAUNCHED.

PAMYAT AZOVA.

An armored cruiser, mentioned on p. 206, No. V, and p. 268, No. VI, was launched on the 1st of June, 1888.

In addition to the armament previously mentioned, three torpedo tubes will be fitted.

The engines are built by the Admiralty Engineering Works, St. Petersburg, and are expected to develop 8,500 H. P., with natural draft, and 11,000 under forced draft; the estimated speeds, under these conditions, are 17 and 18 knots.

The twin screws have a diameter of 16 feet 5 inches, and a pitch of 19 feet.

Steam is to be furnished by six double-ended, cylindrical boilers, six furnaces each, at a working pressure of 140 pounds per square inch. The total weight of machinery with water in boilers is to be 1,150 tons.

Sufficient coal will be carried to give an effective radius of 15,000 miles.

The armor belt of steel has a maximum thickness of 6 inches, tapering to 4 inches towards ends; the protection deck varies from 2 to 2.25 inches in thickness.

The sail area is to be 43,440 square feet.

TERRETZ, URALETZ, KUBANETZ, SAPOROJETZ, DONETZ—TCHERNOMORETZ.

These small cruisers, described on page 268, No. VI, were launched during the year for the Black Sea fleet; they were all built in the yards at Nicolaieff and Sebastopol.

The complement for each will consist of 11 officers and 150 men.

STEAM TRIALS.

ADMIRAL NACHIMOFF.

This battle ship is described on page 120, No. IV. The design of the engines was changed after that publication. She now has triple-expansion engines, and in October, 1887, they exceeded the estimated H. P. of 8,000 by 1,000. The speed was 17.5 knots.

SPAIN.

VESSELS PROPOSED OR LAID DOWN.

The royal decree of the 12th of January, 1887, given in full on page 269, No. VI, was modified on the 13th of October, 1887.

In order to provide the necessary funds for the construction of the first-class cruisers *Alfonso XIII* and *Lepanto* at Ferrol and Cartagena, and the cruiser *Marques de la Ensenada* at Cadiz, the order for the nine torpedo cruisers of 1,500 to 1,100 tons, mentioned on page 270, No. VI, has been suspended.

In place of the eight protected cruisers of 3,200 tons, there will be built six armor-belted cruisers of about 7,000 tons. Three of these vessels are ordered at the Government yards of Cadiz, Ferrol, and Cartagena; the others will be built by contract, in Spain, of Spanish material, and the contractor must employ a large proportion of Spanish workmen.

The hulls are to be of Siemens-Martin steel; the proportions of length, beam, etc., are left to the contractors, but the draught is not to exceed 6.75 metres (22.14 feet).

The battery is to include twelve B. L. Hontoria guns—two 24 centimetre (9.45-

inch), 21-ton model of 1883, as bow and stern chasers, and ten 14 centimetre (5.5-inch) 4.2-ton, five in each broadside, all shielded; the four forward and after to have bow and stern fire in line with the keel.

The secondary battery is to number eight 6-pounder Hotchkiss R. F. G., eight H. R. C., and two machine guns of 11 millimetre calibre. The total weight of the principal and secondary batteries will be 259 tons. Eight torpedo tubes are to be fitted, four above and four under water, and four torpedoes are to be carried for each tube.

Two separate triple-expansion engines are to work the twin screws. The conditions for speed trials require a six-hours' continuous run at not less than 18 knots with natural draft, and not less than 19 knots for a two-hours' run under forced draft. Working with one engine and screw against enough helm to keep the vessel on a straight course, 12 knots must be made.

The coal allowance is to give an effective radius of 10,000 miles at a speed of 10 knots; the total coal capacity, however, is to exceed the normal allowance by one-third.

The protection is to be in a complete water-line belt of 12-inch (maximum) steel or compound armor, with 5-foot teak backing behind it, and a protective deck with a minimum thickness of 2 inches in the flat part. The conning tower to have 11.8-inch protection and have an armored tube leading below.

The vessels are to have double bottoms and numerous water-tight compartments or cells, some of which are to be filled with coal or cellulose.

The parts below the protective deck are to be artificially ventilated, and electric lights are to be fitted throughout.

There will be cabins for the captain, second and third officers; a wardroom with fourteen state-rooms, steerage for ten midshipmen, special quarters for petty officers, and a sickbay for twenty men.

One 17-knot torpedo-boat is to be carried, weighing not more than 15 tons.

Of the six torpedo vessels mentioned in section 4, page 270, No. VI, as torpedo gun-boats of about 600 tons, two are to be built at the Government yard near Cadiz and one at Cartagena, the other three by contract.

The proposals for bids for building these vessels and the three armor-belted cruisers mentioned above, were published on the 28th of December, 1887, and the time for receiving the bids was fixed at three months.

They were opened on the 2d of April by the council under the presidency of the Minister of Marine.

Four Spanish and five English firms furnished bids for the cruisers. The principal difficulty to overcome was the disinclination of the foreign bidders to build in Spain and employ Spanish labor.

A compromise was effected, and the new Naval Construction and Armaments Company (late Barrow Ship-building Company), of Barrow, received the contracts for all three.

The hulls are to be built at Bilbao, but all the machinery, boilers, torpedo fittings and boats, and the secondary battery will be furnished from England.

Tenders for the three torpedo vessels ran as follows: The lowest bid came from the firm of Augusto Vila, of Corunna, for $86,850 each. The others were: Civil Arsenal at Barcelona, $97,465; firm of Hijos de Heredia, Malaga, $98,430; T. Gill & Co., Ferrol, $102,290; Garcia Ravina, Cadiz, $119,660.

VESSELS LAUNCHED.

REINA CRISTINA—REINA MERCEDES—ALFONSO XII.

These single-screw, unprotected cruisers of 3,090 tons, built at government yards, are described on page 208, No. V.

The first was launched on the 2d of May, 1887, at Ferrol, the second on 9th of September, at Cartagena, and the third at Ferrol on the 21st of the same month.

VICE-ALMIRANTE MACMAHON.

A small steel gun-boat for local service; was built at Ferrol, where her keel was laid in January, 1887. She was launched on the 21st of September, 1887.

One 9-centimetre (3.54-inch) B. L. Hontoria will be carried.

The machinery of two old gun-boats was utilized for the engines, which are to drive twin screws with an estimated horse-power of 150, and a speed of 10 knots is expected.

The principal dimensions are: Length, 90 feet 6 inches; beam, 13 feet 5 inches; and the displacement is about 203 tons with a mean draught of 4 feet 3 inches.

The vessel will be schooner-rigged.

NUESTRA SEÑORA DEL CARMEN.

The first of three small coast-defense gun-boats building at Barcelona was launched under that name on the 11th of December, 1887.

The armament consists of one 9-centimetre (3.54-inch) B. L., carried 7 feet above the water line.

A speed of 13.5 knots is estimated with an I. H. P. of 350 developed by the triple-expansion engine.

The hull is divided into five water-tight compartments; the after one containing the magazine, has a steel deck over it.

The principal dimensions are: Length, 78 feet 9 inches; beam, 12 feet 10 inches; displacement, 48 tons.

A crew of twenty men will be carried by each vessel.

STEAM TRIALS.

REINA REGENTE.

This protected cruiser, described on page 271, No. VI, had a two hour forced-draft trial on the 10th of October, 1887, during which four runs were made over the measured mile and a mean speed of nearly 20.6 knots realized.

On her natural draft trial the mean speed for six hours was 18.68 knots, average number of revolutions 94.37, and I. H. P. 7,500.

In both cases the vessel carried weights to bring her down to the designed load line; the trials were highly satisfactory, the boilers and engines giving no trouble whatever.

During some turning trials while steaming 18 knots, a complete circle of about 350 yards diameter was made in 2 minutes 58 seconds from the time the order was given to put the helm over. This remarkable performance of a ship 320 feet long on load water line is due to her rudder, which was designed by Messrs. Thomson and Biles and is on the same principle as those fitted to the torpedo vessels *Wiborg* and *El Destructor*.

Its area is 230 square feet, its shape is shown in Fig. 1, and the section A. B. in Fig. 2 shows its conformity to the run of the ship.

Fig 3 shows the same type of rudder as fitted to the new Inman Steamer *City of New York* built by this firm (Thomson & Co.)

On November 30, 1887, while proceeding on her way down the Clyde, the steering gear suddenly gave way and the vessel ran ashore. The damage to the hull from this grounding was slight, showing the good quality of the steel plates and frames; the vessel was taken back to the works and repaired.

On March 16, 1888, she left the Clyde for Ferrol, Spain, and arrived at her destination on the 18th. The speed claimed in this run of 48 hours under natural draft is 18 knots, with an I. H. P. of 7,000, the distance being given as 870 miles.

The steaming distance from the works at Govan to Ferrol is 770 knots, or 886 statute miles.

She was delivered without her 24-centimetre guns, which are building at Armstrong's works in England and are not yet completed.

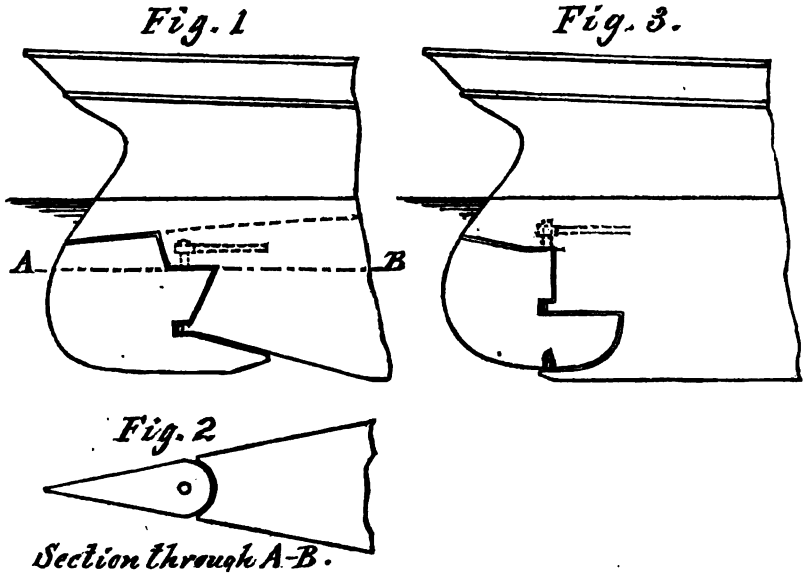

ISLA DE CUBA—ISLA DE LUZON.

These protected cruisers are described on page 272, No. VI.; the dimensions there given need slight corrections; the length between perpendiculars is 185 feet, beam 30 feet, displacement 1,030 tons, at a mean draught of 11 feet 6 inches.

The *Isla de Cuba* had her steam trials outside the Tyne on the 17th of September, 1887, when she realized a speed of 14.27 knots on the measured mile, under natural draft, and made an average speed of 14.03 knots for six hours.

Under forced draft the speed was 15.92 knots over the measured mile.

The *Isla de Luzon* with natural draft made 14.42 knots over measured mile, and 14.08 knots for six hours; with forced draft the measured mile speed was 15.44 knots, and the mean for two hours 15.22 knots.

CONDOR.

A small gun-boat recently built by contract at Barcelona, for coast service, carries one gun (3.54 inches) B. L. and two machine guns.

The contract speed was 9 knots under natural, and 13.5 knots under forced draft; both requirements were exceeded on trial; the natural-draft speed was 11 knots, and under forced draft 13.54 knots were made with 286 revolutions for 9 hours.

The four-bladed screw is driven by a triple expansion engine, with cylinders of 10.5, 15, and 24.5 inches diameter and a stroke of 11.8 inches. The boiler is of the locomotive type. The coal capacity is 3 tons.

The principal dimensions are: Length at water-line, 78 feet 9 inches; beam, 12 feet 9.5 inches, and displacement 63 tons, with a draught of water of 3 feet forward and 5 feet 2 inches aft.

The vessel is built of steel, has a double bottom and four water-tight compartments.

LEYTE.

This small cruiser, built by the Whampoa Dock Company at Hong Kong, and described on page 272, No. VI, was rejected in December, 1887.

The righting moment was very small; the speed realized was only 11.73 knots, instead of the 12.5 called for, and the electric lighting plant did not come up to the terms of the contract.

The speed of her steam launch also fell below the requirements.

AUSTRIA.

VESSELS PROPOSED OR LAID DOWN.

RAM CRUISER.

The Austrian naval appropriations provide 250,000 florins ($101,500) as the first installment for this vessel of 4,200 tons. She is to be laid down during the year, and is estimated to cost 2,000,000 florins ($812,000).

TORPEDO VESSEL.

The sum of 260,000 florins ($105,560) is appropriated for building a vessel of this type of 360 tons displacement.

VESSELS LAUNCHED.

TIGER.

This torpedo cruiser is referred to in No. VI, under the head of *Meteor*. She is similar to the *Panther*, described on pages 86, 138, and 206, of No. V, but somewhat larger.

The Stabilimento Tecnico Triestino had the contract for building this vessel; the keel was laid in 1886, and she was launched from their yard at San Roco, near Trieste, in the latter part of 1887.

The armament is heavier than in the others of her class; the main battery is increased by two 12-centimetre (4.72-inch) B. L., making a total of four, mounted in projecting ports. The secondary battery and torpedo armament is the same as in the others, consisting of six 3-pounder R. F. G., four 47-millimetre R. C., and four above-water launching tubes.

The engines are of the same type and have same dimensions· the boiler power is increased somewhat, and the estimated speed is 19 knots with forced draft.

The principal dimensions are: Length between perpendiculars 230 feet, 8.4 inches; beam, 34 feet 5.4 inches; mean draught, 14 feet, with a displacement of 1,641 tons.

The cost of the Tiger is 1,000,000 florins ($406,000).

STEAM TRIALS.

METEOR.

This torpedo vessel was built for the Austrian Government in 1887 by Schichau at Elbing. She had a trial trip on the 11th of August of that year, when her vertical triple-expansion engines developed 3,300 horse-power, and a speed of 23.1 knots was made over the measured mile course, but her torpedoes and guns were not on board at the time.

In September, 1887, she arrived at Pola, having taken coal at Gibraltar. With her coal on board, but without armament or ammunition, she drew 7 feet forward and 11 feet aft.

At Pola a battery of nine Hotchkiss R. F. G. of 47 millimetres was put on board and she was supplied with four torpedoes for her bow tube, which brought her on an even keel drawing 9 feet 9 inches.

The principal dimensions are: Length, 187 feet; beam, 22 feet 4 inches; and a load displacement of 420 tons, normal 350 tons. The complement comprises five officers and forty-four men. With everything on board she is reported as making a run from Barcelona to Messina at a mean speed of 21 knots.

The performance of the vessel gave such great satisfaction that Schichau received orders from the Austrian Government for another of this type.

CHINA.

VESSELS PROPOSED OR LAID DOWN.

At the Foochow yard the viceroy is building for the southern navy four gun vessels about 141 feet long and 25 feet beam, and two about 148 feet long and of 19 feet 8 inches beam, the latter for river service.

Four composite torpedo vessels of about 1,500 tons and an I. H. P. 3,400 are also proposed.

VESSELS LAUNCHED.

HUAN-TAI.

This composite dispatch vessel was commenced at the Foochow yard in December, 1885, and finished last year.

The battery is composed of two 15-centimetre (4.9-inch) B. L. forward and one in pivot aft, besides four 12-centimetre (3.9-inch) B. L. in broadside. The secondary battery numbers four H. R. C.

One torpedo tube is fitted on each bow.

CHUEN TIAO—LI KIN—KAI PAN.

These vessels were built by the firm of Armstrong & Co., for the Chinese Government, and left England for their destination on the 2d of April, 1888.

Their mission in time of peace will be that of revenue vessels. Each carries a battery of two 20-pounder Armstrong B. L. and two Hotchkiss R. F. G.

The engines are triple expansion, designed to drive the vessels 12 knots.

All three are rigged as 3-masted schooners. They have a poop, top gallant forecastle, and hurricane deck.

The *Chuen Tiao* has a displacement of 700 tons; that of the *Li Kin* and *Kai Pan* is 500 tons.

FEE-CHEN.

The 1,300-ton vessel described on page 277, No VI, developed an I. H. P. of 1,000 and a speed of 13 knots.

She left England with 600 miles of submarine cable on board to lay between Foochow and the Island of Formosa.

DENMARK.

VESSELS PROPOSED OR LAID DOWN.

The Government is building another armored coast-defense vessel, a sister ship of the *Iver Hvitfeldt* described on page 213, No V.

A new third-class protected cruiser is designed to carry a battery of two 6-inch, 35 calibre B. L.; four 57-millimetre H. R. C., and some of 37-millimetre calibre. Four torpedo tubes are to be fitted, the bow tube to be the only one under water.

The principal dimensions are: Length, 331 feet 8 inches; beam, 34 feet; draught, forward 10 feet 3 inches, aft 11 feet 4 inches; displacement, about 1,280 tons.

A complete protective deck will have a thickness of 1.5 inches over machinery space and 1.25 inches at ends.

A speed of 17 knots is to be realized with an I. H. P. of 3,200.

The regulations for speed trials require that the vessel be brought down to the load-line and steamed for four hours under forced draft, and for six hours with natural draft.

The engines are to be kept running as nearly as possible at a constant speed during the trials; the speed of the ship is to be the mean of a number of runs over the measured mile, taken frequently and without the knowledge of the people at the engines.

HOLLAND.

VESSELS LAUNCHED.

CERAM—FLORES.

These small cruisers for the Dutch Indian navy were laid down in 1886 and launched in 1887. They were built by contract, the *Ceram* at Flushing, by the Royal Company of the Schelde, the *Flores* at Amsterdam, by the Royal Engine Works.

Each carries a battery of three 12-centimetre (4.72-inch) and one 7.5-centimetre (2.95-inch) Krupp B. L.

The diameters of the cylinders of the triple-expansion engines in the *Ceram* are 20, 29, and 46 inches; in the *Flores* they are 20, 28, and 46 inches; in both vessels the length of stroke is 27 inches.

Steam is furnished by two double-ended cylindrical boilers of steel, 8 feet 2 inches in diameter and 15 feet long, having a grate surface of 65 square feet and a heating surface of 2,000 square feet.

Trials were had in July and August, 1887, with a four-bladed Griffith screw of 9 feet diameter, 13 feet pitch, then with two of the blades taken off, and last with a two-bladed screw of same diameter, but of 11 feet 8 inches pitch.

A full account of these trials is given on page 331; the vessels were 9 inches lighter than their load draught, and displaced only 512 tons each.

The load displacement is 566 tons at a mean draught of 10 feet 2 inches. The length between perpendiculars is 152 feet; greatest beam, 25 feet 7 inches; depth, 15 feet 5 inches.

JAPAN.

VESSELS PROPOSED OR LAID DOWN.

Fifty million yen ($44,350,000) has been designated as the amount to be expended for the Japanese navy during the next five years, and its strength is to be increased by an addition of 15 vessels and 30 torpedo-boats during that time.

ITSUKUSIMA—MATSUSIMA.

These names were given to the two coast-defense vessels ordered from the Société des Forges et Chantiers de la Mediterranée, and described on page 278, No. VI.

HASIDATE.

A sister ship to the above, is building at the Yokosuka navy-yard.

TISIMA.

This name was given to the small armored gun vessel building at Ishikawasima. She is described on page 278, No. VI.

VESSELS LAUNCHED.

AKAGI—ATAGO—CHOKAI.

These vessels are sister ships to the gun-vessel *Maya*, described on page 278, No. VI.

They were launched during the latter half of 1887; the first at the Onohama navy-yard, Kobe; the *Atago* at the Yokosuka, and the *Chokai* at the Tokio yard.

MANJIU—KANJIU.

These wooden barks were laid down at the Onohama yard, Kobe, in 1886, and launched in August, 1887.

They are to be attached to the new naval station at Kure, near Hirosima, as training vessels. Each is to carry a battery of two 20-pounder and two 17-pounder Armstrong B. L.

The principal dimensions are: Length, 134 feet 6 inches; beam, 34 feet 5.5 inches; depth, 19 feet 9 inches; displacement, 877 tons with a mean draught of 14 feet. The sail area will be 8,921 square feet.

STEAM TRIALS.

TAKACHIHO.

This second-class protected cruiser, in all respects a sister ship to the *Naniwa*, is described on page 121, No. IV.

On the 24th of May, 1887, a full-speed trial was made in four runs over a measured mile in Yeddo Bay; two runs were with the tide and two against it.

The draught of water was 17 feet 7 inches forward and 19 feet 9 inches aft; mean, 18 feet 6 inches, or 2 inches more than the designed load draught.

The mean results of the four runs were: Boiler pressure, 93.19 pounds; vacuum, 24.44 inches; revolutions, 119.25; I. H. P., 5,726.5; and speed, 17.885 knots.

The consumption of coal per I. H. P. was 3.8 pounds; at a speed of 11.53 knots, with 72.25 revolutions and an I. H. P. of 1,349, the coal consumption per I. H. P. was 1.7 pounds, using 4 boilers.

SWEDEN.

VESSELS PROPOSED OR LAID DOWN.

GÖTA.

A sister ship to the armored coast-defense vessel *Svea*, described on pages 212 and 213, No. V (steam trials, page 276, No. VI), was ordered from the Motala Company in Sweden, for $376,350.

The contract for the armor plates for hull and turret was made with Messrs. Schneider & Co., le Creusot, France.

CRUISER.

The sum of $330,776 is appropriated for the construction of this vessel, to be laid down this year.

A battery of ten guns is to be carried, and torpedo tubes are to be fitted. The estimated speed is 14 knots and the I. H. P. 1,800.

TURKEY.

VESSELS PROPOSED OR LAID DOWN.

It is in contemplation to renovate some of the obsolete ironclads and to order four new powerful vessels of the latest type and four torpedo-boats, at an estimated outlay of $19,466,000.

The Government has ordered a dispatch-boat and two torpedo-vessels from the Germans, and the Germania works at Gaarden, near Kiel, have the contracts for building them.

The dispatch-boat is to carry an armament of two 10.5-centimetre (4.13-inch) Krupp B. L.; eight 8.5-centimetre (3.34-inch) Krupp B. L., and ten H. R. C. Eight torpedo-tubes are to be fitted.

The triple-expansion engines are to develop 4,500 I. H. P., and the estimated speed is 19 knots. The boilers are of the locomotive type.

The vessel will be built of steel. Her principal dimensions are: Length, 229 feet 7 inches; beam, 31 feet 2 inches; draught, 16 feet 5 inches.

F. SINGER,
Lieut., U. S. N.

MACHINERY.

Little change has been made in the general design of the engines of naval vessels beyond that outlined in General Information Series, No VI. The triple-expansion engine is being introduced almost as universally in the navy as it is in the merchant service, and every vessel now building by the English Government is to have them. The engines of the *Medea* class, which are designed for 9,000 horse-power, are expected to develop this power on a weight of machinery, including water in boilers and condenser, of 161 pounds per indicated horse-power. The steam pressure is 155 pounds, the stroke of engines 39 inches, and the estimated piston speed 910 feet. The engines of the dynamite cruiser *Vesuvius*, which are four-cylinder triple-expansion, working with a boiler pressure of 160 pounds, are expected to have a piston speed of 930 feet per minute when developing their maximum power.

The Italian Government is building some very large ships, one of which, the *Sardegna*, is to have triple-expansion engines of 22,800 H. P. There are two sets of engines to each shaft, so arranged that when cruising at reduced speed the forward sets can be disconnected and the after engines only used. The cylinders are 39, 59, and 88 inches in diameter, with a stroke of 51 inches, and the piston speed is expected to be 1,020 feet when developing the maximum power. Steam is furnished by eighteen four-furnace cylindrical return-tubular boilers, working at a pressure of 150 pounds. The crank-shafts are each made in six sections (three for each engine on the same side of the ship), the total length being 59 feet 11¼ inches, and the weight of each 33 tons. The shaft of the forward engines is 16 inches outside and 8 inches inside diameter, and that of the after ones 20 and 10.

Besides the *Sardegna*, the Italians are also building the *Re Umberto* and the *Sicilia*, which are to have compound engines of 19,500 I. H. P., arranged similarly to those of the *Sardegna*, two sets to each shaft. The diameters of cylinders are 47 and 89, and the stroke 51 inches.

The *San Francisco* is the only one of our ships now building which has crank-shafts made in interchangeable sections, those of all the others being made in one length.

A reaction seems to have set in in favor of the Stephenson link motion, instead of the radial gears, for operating the main steam-valves, and the latter are now seldom fitted except in cases where the designer is restricted by length of engine-room, or where more attention is paid to reduction of weight than to general efficiency.

The number of quadruple-expansion engines which have thus far been built is comparatively, small owing probably to the difficulty of building, under the existing inspection rules, large boilers which might carry a sufficiently high pressure to enable the engines to show an appreciable gain over triple-expansion engines.

The table on the next page, which comprises nearly all the steamers now fitted with quadruple-expansion engines, will give a good idea of the prevailing practice in designing them. It will be observed that, with few exceptions, the areas of the cylinders are very nearly in the proportion of 1 : 2 : 4 : 8. The only marine engine of this type which has been built in this country is one for the yacht *Say When*, by

Herreshoff. The engine has five cylinders, which are of the same size as those of the two sets to be put in the twin-screw torpedo-boat which Herreshoff is building. The *Narod*, a 120-foot yacht, fitted with a Ward boiler, is also to have this type of engine. Quadruple-expansion engines have not yet been fitted in any naval vessels.

QUADRUPLE EXPANSION ENGINES.

Name of vessel.	Number and diameter of cylinder.				Stroke.	Steam pressure.	I. H. P.
	1	2	3	4			
Bromo	23	33	43	63	42	200	1,500*a*
Buenos Aires	32	46½	64½	92	60	170	4,500*a*
City of Venice	30	40	52	70	48	145	1,300
County of York	20	28½	40	57	42	155	984
Grace Darling	10¼	14	20	28	20	200	360
Jumna	35	48½	67	94	60	160	3,415
Kronprinz Friedrich Wilhelm	21½	30½	43	61	48	170	1,700
Lahora	24	34	48	68	48	160	2,000*a*
Myrtle	12	17	24	34	24	180	550
Peking	23	35	46	67	72	.....	.....
Rionnag-na-mara	3 of 7	16	22	34	24	170	528
Suez	22	30	43	62	51	152	985
Tenasserim	24½	37	49	72	42	180	1,800

a Estimate.

SCREW PROPELLERS.

The design of screw propellers is now receiving a great deal more general attention than has hitherto been the case, and the prevailing practice is to make screws much smaller in diameter and with much less surface than was usual with the slow-running engines of a few years ago. The following table will give a very good idea of the prevailing English practice for twin-screw vessels. It is taken from a paper by Mr. E. A. Linnington, read last year before the Institution of Naval Architects. Fig. 1 shows the method of fitting the hub to shaft and blades to hub, and Figs. 2, 3, and 4 the shape of blades for the screws of the vessels whose particulars are given. The screw of B, Fig. 3, is large for 88 revolutions, but the tips are very narrow. If the blade were as shown dotted for 16 feet diameter, the same work could be done with the same number of revolutions, but with a little coarser pitch and a little more slip. The longitudinal position of these screws is such that the center is about one-fifth the diameter of the screw forward of the after side of the rudder-post.

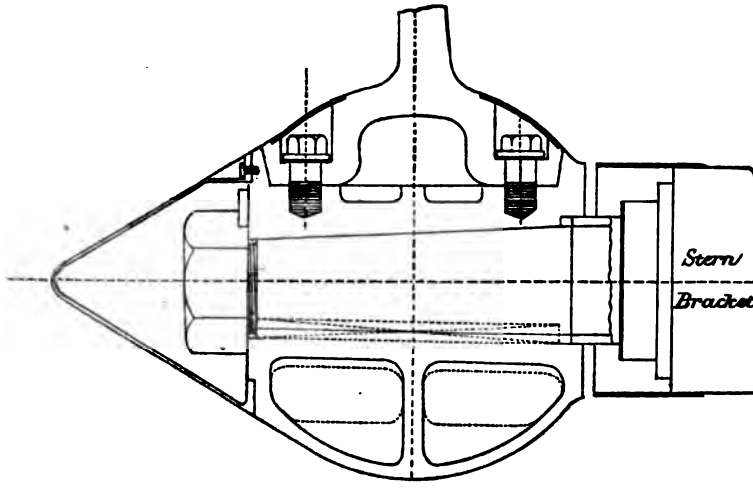

FIG. 1.

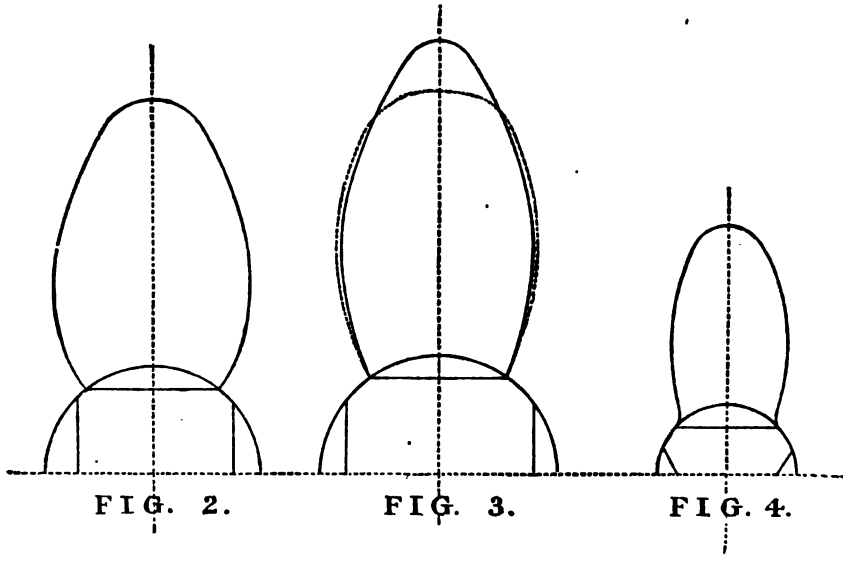

FIG. 2. FIG. 3. FIG. 4.

PARTICULARS OF SOME RECENT HIGH-SPEED TWIN SCREWS.

Ship.	A.	B.	C.	D.	E.	F.
Length ..... .feet..	325	315	300	300	220	250
Breadth .....do....	68	61	56	46	34	32½
Draught on trial:						
Forward	26′ 2″	24′ 6″	19′ 9″	15′ 6″	12′ 10″	13′ 1″
Aft	27′ 3″	25′ 6″	22′ 0″	19′ 9″	15′ 2″	14′ 7″
Displacement .....tons..	9,696	7,645	5,000	3,581	1,560	1,544
I. M. S..... square feet..	1,560	1,287	1,000	744	438	392
Speed of ship.....knots..	16.92	17.21	19	18.18	16.91	17
I. H. P.....	11,610	10,180	8,620	6,160	3,115	3,045
Revolutions per minute	107.2	88	119	122.6	150.4	132.1
Pitch of screw.....	19′ 5″	22′	18′ 9″	17′ 6″	12′ 7½″	14′ 9″
Slip .....per cent..	17.6	10	12.9	14.2	9.7	11.4
Diameter of screw	15′ 6″	18′	14′ 6″	13′	10′ 6″	11′
Diameter of boss.....	4′ 4″	4′ 11″	3′ 9″	3′ 5″	2′ 9″	2′ 10″
Number of blades.....	4	4	3	3	3	3
Blade area of one screw	72	87	60	47	24	24
Shape of blade.....	Fig. 2	Fig. 3	Fig. 2	Fig. 2	Fig. 4	Fig. 4
Pitch÷diameter	1.25	1.22	1.3	1.34	1.2	1.34
Disk÷blade area.....	2.62	2.92	2.75	2.82	3.6	3.96
Immersion of screw	9′	5′ 3″	.....	4′ 4″	2′ 9″	1′ 10″

The letters A, B, C, D, E, and F refer respectively to the *Howe*, *Impérieuse*, *Orlando*, *Severn*, *Scout*, and *Alacrity*.

The trials of the Italian cruiser *Dogali* furnish a good illustration of what may be done by properly proportioning the screw to the ship's resistance. Her screws were originally 12½ feet in diameter, and drove the ship at the rate of 18.9 knots over the measured mile, on about 7,800 I. H. P.; the diameter was then reduced to 12 feet, the pitch decreased and surface increased, when, with 7,600 I. H. P., and about the same number of revolutions, the speed rose to 19.66 knots.

At the meeting of the Institution of Naval Architects, in 1886, Mr. W. H. White gave an account of what had been accomplished by an alteration of the *Hecla's* screw. She was built for the merchant service, but was bought by the British Admiralty for use as a torpedo-depot ship. Her screw was 19 feet 9¾ inches in diameter, with a pitch of 22 feet 6½ inches. When tried on the measured mile she made 12 knots with 1,760 I. H. P., which was all the screw would work off. Its diameter was then reduced to 18 feet, the surface reduced about 23 per cent., the pitch remaining practically the same, when, with 2,260 I. H. P., the speed of the ship was 13¼ knots.

The *Tripoli*, of the Italian navy, is the only completed vessel which has yet been fitted with three screws. The outer screws are arranged similarly to those of a twin-screw vessel, but the shaft of the central one is carried much lower, emerges at the stern just above the line of the keel, and passes beneath the rudder, beyond which the screw works.

TRIALS MADE WITH ONE, TWO, AND THREE SCREWS IN THE ITALIAN TORPEDO-CRUISER TRIPOLI.

[From a paper by Mr. F. C. Marshall.]

No. of screws used.	Diameter.	Pitch.	Surface of each.	Revolutions.	Speed.	Slip.	I. H. P.	Mean draught.	Displacement.
	Ft. In.	*Ft. In.*	*Sq. ft.*			*Per ct.*		*Ft. In.*	
1.....	5 3	6 1¼	7.15	356	14.55	32	1,030	9 10¾	770
2.....	5 1	6 1¼	6.52	383	18.33	18.6	2,076	10 2⅜	802
3.....	5 9	7 1½	7.57	297	19.80	5.25	3,016	10 5½	831

Owing to the circumstance that each of these trials was made with a different screw, and that no trials were made to ascertain the power required to drive the vessel at the same speed with all three screws, no estimate can be formed of the propulsive efficiency of one or two screws as compared with three. The same screw was used in the trial with one as in that with two screws, the only difference being that the diameter was slightly reduced in the latter trial.

The *Tripoli* is being followed by the *Montebello* and the *Monzambano*, the only difference being that they will have triple-expansion engines instead of compound.

The French armored cruiser *Dupuy de Lôme* is also designed for triple screws.

For data of the *Destructor's* screws and the trials made with them, see General Information Series No. VI, page 292.

The following are the data of the screw of the Italian torpedo-boat built by Schichau, whose boiler data are given on page 233:

Diameter	5 ft. 10 in
Pitch at hub	6 ft. 6¼ in.
Pitch at periphery	7 ft. 6⅝ in.
Fraction of pitch at hub	.425
Fraction of pitch at periphery	.056
Number of blades	3
Surface in square feet	4.3056
Revolutions	368
Speed in knots	22.165

The I. H. P. was 944, the mean draught of water 4 feet 5 inches, and the displacement 85 tons.

RESULTS OF EXPERIMENTS WITH FOUR AND TWO BLADED SCREW PROPELLERS.

[Abstract of paper by Mr. J. B. Andreae, read before the Institution of Naval Architects, 1888.]

These trials were made last year, on delivery of two vessels for the Dutch Indian Navy, viz., the *Ceram* and the *Flores*, which were built after the same designs. The stipulations in the contracts gave the opportunity to collect some comparable data relating to four and two bladed screw propellers. There were three series of trials made; the first with a four-bladed screw having 9 feet diameter, 13 feet pitch, and 30 square feet of blade surface; the second with the same screw, but with two opposite blades removed; the third with a two-bladed propeller having the same diameter, but 11 feet 8 inches pitch and 17 square feet of surface. All these screw blades were of the usual Griffiths shape.

The *Ceram* was built by the Royal Company de Schelde (Van Raalte), at Flushing; the *Flores* by the Royal Engine Works (Hudig and Van der Made), at Amsterdam. They have a length between perpendiculars of 152 feet; extreme width, 25 feet 7

inches; depth, 15 feet 5 inches. With a fully-equipped mean draught of 10 feet 2 inches the displacement is 566 tons, the immersed midship section 189 square feet, and the wetted surface 4,875 square feet. The triple compound engines differ only in minor details; the cylinders being for the *Ceram*, 20, 29, and 46 inches, with a stroke of 27 inches; for the *Flores*, 20, 28, and 46 inches, with the same stroke (27 inches). Each vessel has two double-ended boilers, working at 120 pounds pressure, having 65 square feet of grate and 2,000 square feet of heating surface. They are fitted with forced draft by means of a fan; in the case of the *Ceram* with closed stokehold, in that of the *Flores* blowing direct in the ash-pit.

The results obtained are shown in the annexed table. The number of revolutions and the speed of the vessel were taken practically correct. Diagrams of the cylinder pressures were obtained each run simultaneously, but there always are more reasons for the indicated horse-power not being so reliable as the speed and the revolutions. The mean draught only being stipulated for the contractors' trial, there was some difference in trim; the propeller of the *Ceram* only being immersed 2.6 inches, that of the *Flores* 6.1 inches.* Weather and sea were the same on the different days of trial.

It will be noticed how small the influence was of removing two blades of the four, except in the slightly-increased number of revolutions (only 10 per cent.), so that the loss of one-half of the propelling surface was more than balanced by the gain in friction and other causes. Beyond a speed of 12 knots the vibrations with the two-bladed screw of the *Ceram* became troublesome. This was not so much the case with the propeller of the *Flores*, which had less pitch and more surface. I think it probable that at higher speeds the efficiency in the case of the two-bladed propeller of the *Ceram* was influenced by the violent vibrations. From the curves of revolutions and indicated horse-power the following table has been prepared, showing the indicated horse-power by regular intervals, necessary for a certain number of revolutions with the four-bladed and the two-bladed screw of the *Ceram*:

1. Revolutions	80	90	100	108	116	123	128
2. I. H. P. four-bladed propeller	200	300	400	500	600	700	800
3. I. H. P. two-bladed propeller	140	210	300	375	465	545	625
4. Difference between 2 and 3	60	90	100	125	135	155	175
5. Difference in percentage of 2	30	30	25	25	22	22	22

From the same curves the following table has been deduced, showing the indicated horse-power by regular intervals, necessary for a certain speed of the *Ceram* with the four-bladed and the two-bladed screw:

1. Speed in knots	8.7	9.7	10.6	11.35	12
2. I. H. P. four-bladed propeller:	200	300	400	500	600
3. I. H. P. two-bladed propeller	180	275	375	480	625
4. Difference between 2 and 3	20	25	25	20	−25
5. Difference in percentage of 2	10	8	6	4	−4

I may add that the model experiments on Mr. W. Froude's system gave for the mentioned speeds:

E. H. P. .. 118 169 230 298 372

At 11.8 knots speed the indicated horse-power for both screws was the same, viz, 565; estimated horse-power is then 348.

On comparing each of the curves of performance (immersed midship area or displacement) with its slip curve, it will be observed that, generally speaking, where the slip is the lowest the efficiency is the highest, as might be expected. Where this

* When fully equipped the draught is 9 inches more.

is not the case, it may be presumed that the indicated horse-power is not quite correct. This becomes still more evident in curves which were drawn by setting down the slip percentage on the axis of abscissa and the coefficients of performance $\frac{S^3 D^{\frac{2}{3}}}{I.H.P.}$ on the axis of ordinates.

Screw propeller experiments with the gun-boats Ceram and Flores.

Name.	Date.	Revolutions.	Speed.	I. H. P.	Slip.	Indicated thrust.	$\frac{S^3 D^{\frac{2}{3}}}{I.H.P.}$	$\frac{S^3 A}{I.H.P.}$	Remarks.
	1887.		*Knots.*		*Per c.*	*Tons.*			
Ceram	July 26 .	20.5	.....	12	.....	0.66	.....	.....	2 sets of diagrams.
	July 26 .	30	.....	25	.....	0.94	.....	.....	2 do. do.
	July 26 .	56.6	6.25	61.2	13.9	1.23	254	713	3 runs, 3 sets of diagrams.
	July 26 .	77	8.50	197.4	14	2.90	198	559	3 do. 3 do. do.
	July 26 .	79	8.84	204.4	12.8	2.93	215	604	3 do. 3 do. do.
	July 26 .	80	8.95	219.5	12.8	3.11	208	583	3½ hours, 6 do. do.
	July 26 .	86.3	9.396	255.1	15.1	3.35	207	580	3 runs, 3 do. do.
	July 28 .	117.1	12.124	607	19.4	5.86	188	530	4 hours, 7 do. do.
	July 28 .	117.7	12.19	616.6	19.3	5.91	188	530	5 runs, 5 do. do.
	July 28 .	128.6	12.78	804	22.5	7.08	166	466	4 do. 4 do. do. (forced draft.)
	Aug. 23 .	82.5	8.41	156	20.6	2.14	243	688	3 runs, 3 sets of diagrams.
	Aug. 23 .	102	10.08	311	23	3.45	210	592	3 do. 3 do. do.
	Aug. 23 .	120	11.55	505	25	4.76	195	550	4 do. 4 do. do.
	Aug. 23 .	132	12.226	728	27.7	6.25	161	453	3 do. 3 do. do. (forced draft.)
Flores	July 21, 22	25	.....	17.5	.....	0.88	.....	.....	2 sets of diagrams.
		58.7	5.61	54	17	1.17	208	587	3 runs, 3 sets of diagrams.
		86	8.345	166	15.8	2.44	223	628	4 do. 4 do. do.
		105	9.89	332	18.2	4.00	186	524	3 hours, 6 do. do.
		106	9.99	327	18.1	3.90	195	548	4 runs, 4 do. do.
		126.1	11.36	552	21.7	5.53	170	478	5 do. 5 do. do.
		131	11.82	602	21.6	5.80	176	494	4 hours, 8 do. do.
		132.5	11.96	622	21.5	5.93	176	494	2 do. 11 runs, 11 sets of diagrams.
		148.3	12.94	811	24.2	6.91	171	481	3 runs, 3 sets of diagrams, (forced draft).

On July 26 the draught of the Ceram was $\frac{\text{8 ft. 10.3 in.}}{\text{9 ft. 11.7 in.}}$; D=510 tons; A=179 sq. ft.; propeller, four bladed, 9 ft. × 13 ft. × 30 sq. ft.

On July 28 the draught of the Ceram was $\frac{\text{8 ft. 11.5 in.}}{\text{9 ft. 11.3 in.}}$; D=512 tons; A=180 sq. ft.; propeller, four bladed, 9 ft. × 13 ft. × 30 sq. ft.

On Aug. 23 the draught of the Ceram was $\frac{\text{8 ft. 11.5 in.}}{\text{9 ft. 11.3 in.}}$; D=512 tons; A=180 sq. ft.; propeller, two bladed, 9 ft. × 13 ft. × 15 sq. ft.

On July 21, 22, draught of the Flores was $\frac{\text{8 ft. 7.7 in.}}{\text{10 ft. 3 in.}}$; D=512 tons; A=180 sq. ft.; propeller, two bladed, 9 ft. × 11 ft. 8 in. × 17 sq. ft.

LIQUID FUEL.

The success attending the burning of liquid fuel during the past two years has not been very marked, and little change has been made in the apparatus employed for burning it as given in General Information Series No. V. Many experimenters are still at work, but none with boilers designed especially for the purpose, all making modifications in the existing type of coal-burning furnaces to adapt them for liquid fuel. The success thus far achieved has not been such as to warrant the abandonment of coal, except in localities like the Caspian, where the fuel is very cheap. The

adaptation of the boilers of the Russian battle-ship *Tchesme* for burning liquid fuel marks the most important step taken by any government in the matter, and the result will be watched with great interest by all interested in the subject.

The most important experiments made last year were by M. d'Allest, at Marseilles. He used a small return tubular boiler, the furnace of which was fitted with an arch, or return bridge, and lined with fire-brick. The following are its principal data:

Working pressure	pounds	50
Heating surface, in square feet:		
Tubes		179.8
Total		215.3
Calorimeter of tubes	square feet	1.67
Cross-section of smoke-pipe	do	1.64
Water surface	do	27.16
Steam space	cubic feet	39.9
Water space	do	88.3

The boiler was tried under both natural and forced draft. For the natural-draft experiments the door and dead-plate were removed, and a plate substituted carrying at its lower part a small door on which the burners or atomizers were fixed. In the forced-draft experiments the furnace was closed air-tight by means of a cast-iron plate, on which the burners were placed, the air for forcing the combustion being supplied by a fan.

The burner used in the natural-draft experiments is shown in Figs. 1 and 2. It consists of a conical case *A*, to which the fuel is admitted through the nozzle *B*. The outlet of this case is closed by a rod, *C*, operated by the hand wheel *K*, and so made that an annular space of about one-twelfth of an inch can be obtained between it and *A*. The steam or other atomizing agent enters at *F*, envelopes *A*, meets the fuel at the orifice, and forces it into the furnace. The quantity burned may be regulated by the position of the rod *C*, which can be taken out altogether by giving *H* a half turn.

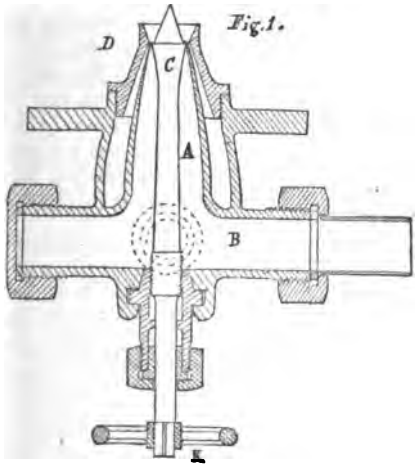

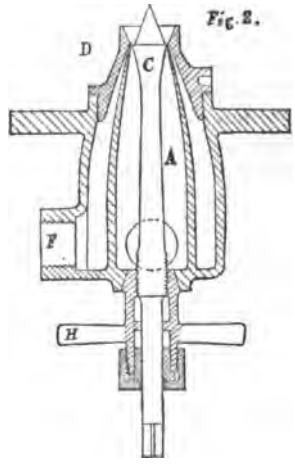

The following are the results obtained from the natural draft experiments, the fuel being astatki, and the atomizing agent steam:

No. of experiment.	Duration.	Consumption of fuel.		Temperature of feed water.	Steam pressure.	Pounds of water evaporated.				
		Total.	Per hour.			Total.	Per hour.	Per hour per square foot of heating surface.	Per pound of fuel.	Per pound of fuel from and at 212°.
	H. M.	*Pounds.*	*Pounds.*							
1	4 15	573	134.8	73.4	42.66	6,832	1,607	7.464	11.90	13.81
2	4 10	464	111.3	75.2	42.66	5,951	1,428	6.633	12.83	14.86
3	3 58	534	134.7	82.4	42.66	6,392	1,611	7.483	11.96	13.77
4	3 6	405	130.6	82.4	42.66	4,628	1,493	6.935	11.43	13.16
5	5 20	624	117	80.6	42.66	7,494	1,405	6.526	12.00	13.83
6	6 28	844	130.5	82.4	42.66	9,753	1,508	7.004	11.55	13.30
7	4	540	135	82.4	42.66	6,171	1,543	7.167	11.43	13.16
8	4 36	501	128.5	80.6	42.66	6,832	1,483	6.888	11.54	13.30
9	2 7	236	111.5	80.6	42.66	2,865	1,353	6.284	12.13	13.98
10	5 20	742	139	82.4	42.66	8,596	1,612	7.487	11.59	13.34

Mean evaporation per pound of fuel, 11.83.
Equivalent evaporation from and at 212°, 13.65.

The combustion in the preceding experiments is said to have been perfect, and the quantity of fuel burned easily regulated up to a certain point. All attempts to go beyond this, either by increasing the supply to the burner or by using a number of burners, were followed by the production of great quantities of dense black smoke, the evaporation remaining stationary. To remedy this, the burner shown in Figs. 3 and 4 was used. It consists of a conical case A, which the fuel enters through B and leaves as in the natural draft burner. Air, which was the atomizing agent used in this case, enters at F and passes out between the conical nozzle D and the case A, forming an external film enveloping the fuel; it passes at the same time through the openings O into the hollow regulating-rod C and meeting the cone M, enters the furnace in the form of a conical jet within the fuel. With this arrangement the combustion is said to have presented no difficulties after the proper proportion had been established between the supply of fuel and the quantity of air furnished by the fan.

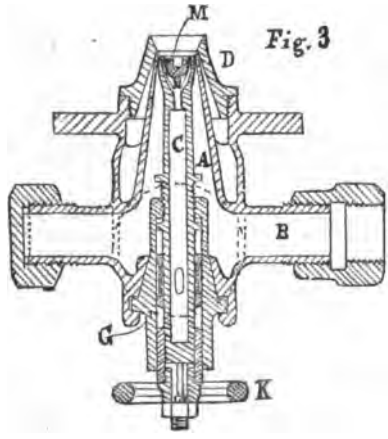

Fig. 3

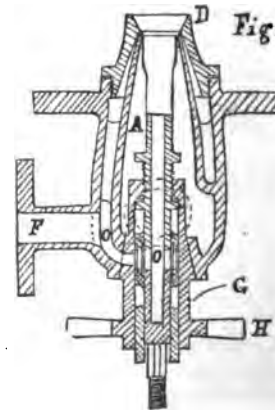

Fig. 4

The following table gives the results obtained, the boiler being the same as in the natural draft experiments, and the fuel, as before, astatki.

	Experiment No. 1.	Experiment No. 2.	Experiment No. 3.
Duration	1h 30m	4h 30m	6h
Consumption of fuel, pounds:			
Total	471.5	1,341	1,729.5
Per hour	314.3	298	288.2
Temperature of—			
Feed water	60.8	64.4	62.6
Uptake	663	575.6	716
Fire-room	77	68	82.4
Steam pressure	42.66	42.66	42.66
Pounds of water evaporated:			
Total	4,848.8	15,690	20,788
Per hour	3,232.5	3,486.7	3,464.7
Per hour per square foot of heating surface	15.014	16.194	16.092
Per pound of fuel	10.28	11.70	12.02
Per pound of fuel from and at 212°	12.02	13.68	14.06
Air pressure, in inches of water:			
At fan	1.776	1.658	1,776
In tubes	.395	.316	.316

The air used in the experiments was heated to a temperature of about 140°, a higher temperature having been found undesirable. As usual in cases where air is used as the atomizing agent, the combustion was accompanied by an intense roaring noise. The evaporation, as shown in the table, reached a very high figure, but as it was necessary to reduce the supply of fuel from time to time on account of foaming, it is very probable that a considerable portion of the water measured was not converted into steam. It is thought that the foaming may be obviated by using a boiler capable of withstanding higher pressure.

From the results of these experiments, M. d'Allest compares the evaporation of this boiler with that of a boiler of the *Marceau* (see page 242), and with a 525 H. P. torpedo-boat boiler. The latter has about 1,075 square feet of heating surface, and the maximum evaporation is 11.5 pounds per square foot per hour, while the mean of the results given in the preceding table is 15.767 pounds. He then proposes two boilers for burning liquid fuel, a locomotive and a return tubular, each having practically the same heating surface as the 525 horse-power boiler. The locomotive type is wholly cylindrical, and the furnaces of both boilers are to be closed air-tight, the front plate being provided with water circulation. The data of these boilers are given below.

	Locomotive.	Return tubular.
Steam pressure, pounds	128	128
Heating surface, square feet	1,071	1,064
Number of tubes	238	166
Diameter of tubes, inches:		
Inside	1.575	1.811
Outside	1.732	1.968
Distance between tube-plates, feet	9.35	11.81
Water surface, square feet	67.06	69.43
Steam space, cubic feet	93.23	96.06

The estimated consumption of fuel, based on 22 pounds of water per I. H. P., is 936 pounds per hour, with a very mild air pressure, the quantity of air being 368 cubic feet per pound of fuel.

R. S. Griffin,
Assistant Engineer, U. S. N.

ORDNANCE.

Following the arrangement observed in previous numbers of this series, the subject of general progress in ordnance is introduced by a reference to the advance made by the naval service of our own country. A brief summary of the work done and to be done on the armaments of the new cruisers is followed by synopses of the various contracts for guns, forgings, ammunition, etc. made during the year, and, where it is thought such matter will be of interest, abstracts of the contract specifications are appended.

An account of the destruction of the *Silliman*, together with the findings of the Navy Pneumatic Dynamite Gun-Board, based upon a consideration of this and other exhibitions of the capabilities of the gun, is given on pages 348–351, under the heading of Gun Trials. Other experiments with shell charged with high explosives will be found on page 376, under High-Explosive Projectiles.

A comparison of the reports of these trials will show, on the one hand, a moderately high-power powder gun capable of throwing to a considerable range a service projectile containing a bursting charge of a very few pounds of high explosive, unsatisfactory or inconclusive target results, more or less danger attending discharge, and in one case actual disaster to the gun; on the other hand, with the pneumatic dynamite gun, great accuracy at a limited range, a bursting charge of fifty-five pounds of the highest explosive, target results that have substantially fulfilled the claims made in advance by the advocates of the gun, and a record clear of accident or mishap.*

A description of the Quick gun is given on page 356. This gun and the cake powder used with it have attracted considerable attention in England, and it is reported will soon be submitted to further and more searching tests. The velocity obtained with a chamber pressure of only 14 tons, viz., 2,180 feet, is certainly remarkable.

For more than a year past experiments have been making with a view to extend the use of the metallic cartridge employed with the 6-pounder R. F.† gun to guns up to and including 6 inches in calibre. That they have been highly successful up to a certain point is attested by the fact that the British Admiralty has definitely adopted the Armstrong 36-pounder, a gun using fixed ammunition, as a part of its future naval armament, and intends it to supersede the present 4- and 5-inch service guns in all ships hereafter to be built. The 70-pounder, although its performance so far has been very satisfactory, seems not to have been received with favor, probably because it would introduce into the service a new and unusual calibre. A 6-inch gun has been completed and will soon be ready for trial, and should this result successfully, it is proposed that the main armament of all but the heaviest of Her Majesty's unarmored ships shall consist of 6-inch and 36-pounder R. F. guns, exclusively. The heavier unarmored ships will carry in addition a number of 9.2-inch 22-ton guns, and in all cases the main battery will be supplemented by the light 3-pounder R. F. gun.

France, which hitherto has had no calibre of R. F. gun heavier than the 3-pounder, has ordered a number of Hotchkiss 9-pounders for the *Brennus* and *Dupuy de Lôme*, and will probably use the new calibre extensively; but its employment by those powers that are already provided with the 6-pounder is doubtful.

* This summary does not take into consideration the results of the experiments made with the Snyder explosive, and for the reason that the reports thereon lack official confirmation.

† R. F.—Rapid-fire.

Italy, it is reported, intends to employ the rapid-fire system with all calibres up to and including 5-inch, and to use a metallic-cased powder charge (separate from the projectile, however) for calibres above 5-inch up to and including 10-inch.

The Maxim machine-gun has been greatly developed during late years, and in its improved form has been extensively exhibited or tried both on this continent and in Europe. It has been very favorably reported on by the Austrian War Office and has been formally adopted into the English and Italian services. A description of the gun of rifle calibre, with some extracts from a report of its performances in Austria, is given on page 364.

The remainder of the space occupied by the notes is given to small-arms, explosives, and high-explosive projectiles, in the order named.

PROGRESS AT HOME.

The battery of the *Boston* is complete, as are alsothe 5- and 6-inch guns of the *Chicago;* and the 8-inch guns of the latter vessel will be ready by September. Money for the 8-inch gun-carriages has been available since March 30, and the work on them has been advanced as rapidly as possible.

The first of the *Miantonomah's* 10-inch guns is at Annapolis awaiting the completion of the tests of the gun and carriage. The trials made thus far are satisfactory; with a 500-pound projectile and 200-pound charge an initial velocity of 2,004 foot-seconds has been obtained. The hydraulic machinery is reported to have worked admirably. No. 2 gun is nine-tenths, and No. 3 seven-tenths completed. The forgings for No. 4 will probably not be received until next year.

The battery of the *Yorktown* is in a forward state, and doubtless will be ready for installation by the time the ship is ready to receive it. The forgings for the armaments of the other vessels authorized by the act of March 3, 1885, viz., the *Newark*, *Charleston*, and *Petrel*, may be expected to be ready by December; those for the *Baltimore's* battery about three months later.

Although under the terms of the contract Bethlehem is not required to make deliveries before February, 1890, the indications are that the gun-forgings plant will be in operation as early as August next; and it is believed that before the close of the ensuing year the material received from Midvale and Bethlehem together will be sufficient for all the vessels thus far authorized, except the coast-defense vessels provided for in the act of March 3, 1887. The armament of these has not yet been decided upon.

Having had occasion to refer to the Bethlehem plant, it may be added that when finished it will be the most complete of its kind in the world.

Up to the present the machine finishing and assembling at the Washington yard have kept pace with the deliveries of forgings with only slight assistance from outside, and with the increased facilities that will result from the establishment of the new gun-shops it is probable that most of this work will continue to be done by the Government;—not all, however, for even when worked to the best advantage the enlarged plant will be able to turn out finished guns only at the rate of twenty-five 6-inch, four 8-inch, six 10-inch, and four 12-inch annually. But the completion of the armaments need not therefore be delayed, for several private firms stand ready to come to the Department's assistance whenever called upon.

Excellent slow-burning powders of domestic manufacture have been obtained for all calibres of guns thus far submitted to test, and no serious difficulty is anticipated in securing suitable qualities for the higher calibres.

It is to be regretted that the efforts to procure projectiles of proper quality have not been so successful. The Chrome Steel Company, of Brooklyn, have made a number of very good 6-inch armor-piercing forgings, but those of 8-inch calibre that have

been received are not so satisfactory; and the cast-steel projectiles, until very recently, have been wholly unsatisfactory.

SECONDARY BATTERIES.

A contract has been concluded between the Navy Department and the Hotchkiss Ordnance Company under the terms of which the latter is to manufacture for the Navy thirty-six 6-pounder R. F. guns, twenty-two 3-pounder R. F. guns, ten 1-pounder R. F. guns, and thirty-two 37-millimetre revolving cannon. Of these there are to be ready for delivery by September 1, 1888, five 6-pounders, six 3-pounders, four 1-pounders, and eight revolving cannon. The remainder is to be ready not later than July 1, 1889.

A separate contract has been made for $150,000 worth of ammunition.

These contracts have a special significance when it is understood that they were awarded only on condition that the company should establish a manufactory in this country. This has been done accordingly, and the Department now has the means close at hand of supplying our ships with secondary batteries at a cost not greater than that for which the same arms can be obtained by foreign powers in the cheapest European markets.

Following is an abstract of specifications for material and manufacture:

Forgings.

Forgings are to be made of open-hearth steel, of domestic manufacture, from the best quality of raw material, uniform in quality throughout the mass of each forging and throughout the whole order for forgings of the same calibre, and free from slag, seams, cracks, cavities, flaws, blow-holes, unsoundness, foreign substances, and all other defects affecting their resistance and value.

Ingots shall be cast solid and are to have an excess of weight of not less than 33 per cent. above that of the rough unbored forging with specimen ends on. Of this excess at least 28 per cent. of the weight of the ingots will be discarded from the upper end and 5 per cent. from the lower end.

The lower end of each ingot, as cast, will be the breech end of the forging made from it.

Forgings are to be annealed, oil-tempered under such conditions as will assure their resistance, and again annealed. No piece will be accepted, nor will its test specimens be broken or considered, unless the last process has been an annealing one. The forging must be left with a uniform fine grain.

All pieces must be annealed and otherwise treated after being rough-bored and turned, except the barrels of revolving cannon and 1-pounders. Pieces forged on a mandrel may be annealed before being rough-bored and turned.

After the final forging all heating must be uniform or uniformly graded throughout the entire piece, and all heating for tempering and all immersing shall be executed with the forging in a vertical position. The whole of the piece must be subjected to the treatment at the same time.

Tests and acceptance of forgings.

Physical tests will be directed towards the exhibition of all the principal physical qualities of the metal. Those to which particular attention will be devoted are tensile strength, elasticity, extensibility, and contraction of area.

These tests are to be made on specimens taken from the forgings after final treatment and within the finished section prolonged. They are to be taken as near the

finished piece as practicable, leaving sufficient metal for submitting additional test-bars in case of retreatment.

In all cases of retreatment the last process must also be an annealing one.

Full Size.

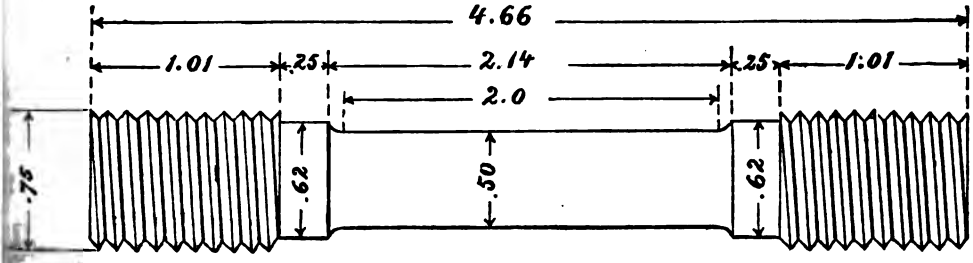

NOTE.—Unless otherwise stated, all test pieces referred to in these and other specifications are of the general shape and several dimensions shown in this cut.

Physical characteristics to be shown by the forgings for different guns, specimens, size, shape, and where taken from the forgings.

37-millimetre revolving-cannon barrels.—After tempering and annealing the forgings for these barrels will be divided as nearly as may be into lots of fifteen, the whole lot to be from the same heat and work of metal. From each lot thus determined one barrel shall be chosen and stamped by the inspector for test.

The test of a lot will consist of the tensile test of at least two specimens from each end of the selected forging.

The test-pieces will have a length of 2 inches between measuring points and a diameter of one-half inch; they will be longitudinal and so cut that their axial lines will lie as near as possible in the middle thickness of the finished barrel.

(*a*) If an average of each of the qualities shown in the four test-specimens equals those in—

Table 1:

Tensile strength	90,000 lbs. per square inch;
Elastic limit	45,000 lbs. per square inch;
Elongation after fracture	25 per cent;
Reduction of area	35 per cent;

and no one of the qualities in any specimen falls below the figures in

Table 2:

Tensile strength	85,000 lbs. per square inch;
Elastic limit	42,000 lbs. per square inch;
Elongation after fracture	20 per cent.;
Reduction of area	30 per cent.;

the piece will be provisionally accepted.

If the average of the qualities shown by the four specimens falls below the figures in Table 1, and if no specimen falls below the figures in Table 2, in any particular, a second set of four specimens may be taken, and they will be considered as laid down in paragraph (*a*).

1-pounder rapid-fire gun tubes.—After tempering and annealing a test-specimen will be cut transversely from the breech end of each tube within the finished lines prolonged at a place selected by the inspector.

If the specimen shows qualities equal to those in—

Table 3:

Tensile strength	90,000 lbs. per square inch;
Elastic limit	45,000 lbs. per square inch;
Elongation after fracture	20 per cent.;
Reduction of area	30 per cent.;

the piece will be provisionally accepted.

If the specimen falls, in any particular, below Table 3, but is equal in all particulars to—

Table 4:

Tensile strength	85,000 lbs. per square inch;
Elastic limit	42,000 lbs. per square inch;
Elongation after fracture	15 per cent.;
Reduction of area	20 per cent.;

a second specimen may be taken, and if the results from this equal the figures of Table 3 the piece will be provisionally accepted.

1-pounder rapid-fire gun trunnion bands.—The trunnion bands may be unhammered steel castings, oil-tempered and annealed. Before oil-tempering the bands will be rough-bored and machined to the dimensions shown on the drawings.

One or more bands may be cast from a single heat of metal; with each heat there will be cast not less than two test-ingots about 3 inches square in section and of suitable length for making tensile specimens.

The test-ingots are to be subjected to the same treatment as the bands of the same heat, and if the two first specimens from them show the following characteristics:

Tensile strength	60,000 lbs. per square inch;
Elastic limit	25,000 lbs. per square inch;
Elongation after fracture	15 per cent.;
Reduction of area	20 per cent.;

the bands made from the heat will be provisionally accepted.

If the first two specimens are unsatisfactory two more may be taken, without retreatment of the bands and test-ingots, and the same rule shall be applied to the results of the second test.

The Department may demand that one of the bands of each heat shall have two test-specimens taken from it, in which case the characteristics to be shown will be:

Tensile strength	60,000 lbs. per square inch;
Elastic limit	25,000 lbs. per square inch;
Elongation after fracture	10 per cent.;
Contraction	15 per cent.;

with the same rule governing a second set of specimens, and the provisional acceptance of the bands made from the heat.

3-pounder and 6-pounder rapid-fire gun forgings.—Tubes and jackets.—After tempering and annealing, a transverse specimen will be cut from each end; that from the breech end and muzzle end of 6-pounder jacket being 2 inches between measuring points and ¼ inch in diameter; that from the muzzle end of tubes and of 3-pounder jacket being 1 inch between measuring points and ¼ inch in diameter.

(*b*) If an average of each of the qualities shown by the two test-specimens from any tube or jacket equals the figures in—

Table 5:

Tensile strength	90,000 lbs. per square inch;
Elastic limit	45,000 lbs. per square inch;
Elongation after fracture	20 per cent.;
Contraction	30 per cent.;

and no one of the qualities in either specimen falls below the figures in—

Table 6:

Tensile strength	85,000 lbs. per square inch;
Elastic limit	42,000 lbs. per square inch;
Elongation after fracture	15 per cent.;
Contraction	20 per cent.;

the piece will be provisionally accepted.

If the average of the qualities shown by the two specimens from any tube or jacket falls below the figures in Table 5, and if neither specimen falls below the figures in Table 6 in any particular, a second set (one from each end) of specimens may be taken, and they will be considered as laid down in paragraph (*b*).

Tubes and jackets will be assembled with the gun in a vertical position, the tube being lowered into the jacket. In no case shall the jacket be raised to a higher temperature than that due to a black heat. Due care shall be observed that the jacket is uniformly heated throughout.

Ammunition.

The body of the steel shell shall be made of steel of the best quality for the purpose, and shall be properly hardened or treated on completion of the machine work.

The gas-check base shall be made of such quality of steel and shall be so fitted as properly to seal the shell.

Common shell shall be made of cast-iron of the best quality for the purpose, entirely free from blow-holes, flaws, and other defects. When practicable they are to be cast base down.

The rotating band of both steel and common shell shall be made of solid drawn brass of the best quality.

The body of the cartridge-case and the re-enforcing cups shall be cold drawn from brass of the best quality.

The head shall be made of cold rolled brass of the best quality. The rivets are to be made of cold drawn brass.

The body of the fuse, the detonator-cup, and screw-cap shall be made of gun-metal of the best quality.

The plunger casing shall be of solid drawn brass tubing and the striker of hard drawn brass wire.

Mounts or carriages.

The material used in the construction of all mounts shall be of the best quality for the purpose.

Pivots and sockets for each kind of gun must be interchangeable.

All mounts shall be provided with an efficient means of securing the guns at sea.

The upper parts of all sockets will be re-enforced by a band of iron or brass, to be specified on the standard approved drawings.

Base rings and holding-down rings of all shifting mounts of the same type must be interchangeable.

All mounts will be so designed that sufficient elevation and great depression can be obtained with the guns.

The trunnion centres of all mounts shall have a height of 45 inches, except in cases where the Department shall specifically designate some other height.

Material and workmanship.

The material employed shall in all cases be of the best quality for the purpose; the workmanship shall be of the best character in every particular, and the finished product must conform to the drawings within the tolerances given in the tables. (In all tables where no tolerance is assigned none will be allowed.)

STEEL-CAST GUNS.

By the act of Congress approved March 3, 1887, the sum of $20,400 was appropriated for the purchase and completion of three rough-bored and turned steel-cast 6-inch guns, one to be of Bessemer, one of open-hearth, and one of crucible steel. In response to the Department's advertisement the Pittsburg Steel-Casting Company bid for the Bessemer casting, and the Standard Steel-Casting Company, of Thurlow, Pa., for the open-hearth casting, and contracts were subsequently awarded to these two companies.

No proposals were received for the gun of crucible steel.

The chief requirements of the specifications are as follows:

The castings from which these guns are to be made must be composed of steel of domestic manufacture, made from the best quality of raw material, uniform in quality throughout the mass, and free from slag, seams, cracks, cavities, flaws, blow-holes, unsoundness, foreign substances, and all other defects affecting their resistance and value.

The guns are to be each of one piece, except the breech-plug (and the trunnion-band, if so desired). They must be unforged.

The Department is to have the right to satisfy itself (by inspection) that the gun is actually made of the kind of steel mentioned in the proposal.

The bidder must state in his proposal the minimum physical characteristics that he engages his metal shall possess, this information being necessary to an intelligent choice between proposals for the same kind of gun. To this end he must insert in the proper table and columns of the "proposals" sent herewith the minimum tensile strength, elastic limit, percentage of elongation and contraction of area that he engages to have exhibited by the test specimens when taken, as hereinafter provided.

The characteristics stated in the proposals are as follows:

	Pittsburg Steel-Casting Co.	Standard Steel-Casting Co.
Stress to be borne at elastic limit.....pounds..	40,000	40,000
Stress to be borne at tensile limit .....do....	80,000	80,000
Per cent. of elongation to be shown.....	7	10
Per cent. of reduction of area to be shown	7	10
Weight, finished.....pounds..	11,000	12,000

The tensile strength and elastic limit of the steel will be reckoned on the original cross-section of the specimen (0.1963 of a square inch). The elongation and contraction of area will each be measured after fracture. The former will be expressed in per cent. of the original length between measuring points, and the latter in per cent. of the original cross-section.

The test-specimen bars are to be taken from the casting after final treatment (at the expense of the contractor), and must be cut within the finished section prolonged, and as near to the finished gun as practicable (these points being verified by inspection).

Rough-bored and turned castings that pass inspection shall be machine-finished by the Department within four (4) months after delivery by the contractor. The statutory test shall take place within three (3) months after completion as above.

Payment will be made when the statutory test of the gun is successfully completed. This test is to consist of ten rounds (the weight of the projectile and muzzle velocity being at least 100 pounds and 2,000 feet seconds, respectively), fired as rapidly as the gun can be loaded by hand and discharged. A critical inspection will be made after the test, and the piece must not exhibit any defects or weakness.

The contract price of the Pittsburg casting is $3,300; that of the Thurlow casting is $5,300.

Following are the results of the physical tests made at the Washington yard:

Specimen.	Tensile strength per square inch.	Elastic limit per square inch.	Elongation after fracture.	Reduction of area after fracture.
Pittsburg gun.				
Muzzle:	*Pounds.*	*Pounds.*	*Per cent.*	*Per cent.*
Longitudinal	81,185	40,464	18	21.26
Transverse	80,722	43,035	18.25	20.79
Do	79,174	40,979	15.55	18.75
Breech:				
Longitudinal	88,973	51,693	9.15	10.89
Do	89,686	51,693	10.35	13.88
Transverse	75,527	51,693	2.65	2.79
Do	73,847	59,332	.60	1.60
Do	73,236	55,258	1.85	4.35
Thurlow gun.				
Muzzle:				
Longitudinal	80,468	37,942	20.60	23.26
Transverse	80,570	38,961	18.20	30.12
Do	81,334	38,451	18.50	27.40
Breech:				
Longitudinal	80,519	38,961	19.55	24.31
Do	80,977	38,451	19.10	27.40
Transverse	80,162	37,942	20.65	22.56
Do	79,246	36,414	24.75	32.43
Do	79,309	37,072	27.85	40.78

The deficiences in the case of the Pittsburg casting are marked, but they have been waived, and the piece has been provisionally accepted. Both castings have been forwarded to Washington to undergo machine finishing.

The interior dimensions of the finished guns will be the same as those of the 6-inch, Mark II.

GUN FORGINGS.

Contracts have been concluded for the manufacture by the Midvale Steel Company of 32 sets of steel forgings for 6-inch guns, and 1 set of chase hoops for a 10 inch gun. All deliveries are to be completed by March 2, 1889.

The specifications for tests and acceptance are substantially, and the physical property limits are exactly, the same as those published in last year's number.

Twenty-two sets of the 6-inch forgings are intended for guns of a new design to be known as Mark III. The chase hoops of the new gun extend all the way to the muzzle. The diameter of the chamber is reduced to 7 inches, and the length is correspondingly increased so as to preserve the capacity of Mark II. The length over all is 196 inches; weight of gun, 11,000 pounds; thickness of wall over chamber, 6.75 inches; at muzzle, 2.40 inches.

OVERHEAD TRAVELING CRANES AND SUPPORTS FOR SAME.

Contracts have been made with the Morgan Engineering Company for the construction, and erection at the Washington navy-yard, of one 25-ton, one 40-ton, and one 110-ton overhead traveling crane; the first named to be ready for delivery, complete in every respect, by September 20, 1888; the second, by October 6, 1888; the third, by March 6, 1889.

A separate contract has been made for the construction, erection, and finishing of the iron frame for a 12-inch gun-shop and supports for the 110-ton crane within the same; all to be ready for delivery, complete in all respects, within ninety days from the 1st day of May, 1888. The same contract provides for the erection of supports for the 40-ton cranes.

GUN LATHES.

The Department has called for proposals for furnishing the necessary material and labor for the construction, delivery, and erection at the Washington navy-yard, of eleven 6-inch gun lathes and one slotter.

Also, the same for the construction, delivery, and erection of sixteen 16-inch gun lathes.

PROPOSED MONITOR TURRET MOUNT.

The Pneumatic Gun Carriage and Power Company having proposed to install a pneumatic plant on one of the monitors, the proposition was referred to the Pneumatic Gun Carriage Board, the Board being authorized to confer with representatives of the company upon certain terms that were not deemed satisfactory. The conference led to certain modifications of the original proposals and, ultimately, to a contract, signed April 25, of which the following are the leading features:

The company to supply, and set up on board the monitor *Terror*, at Boston, Mass., for the sum of $228,750: (1) All the pneumatic machinery, gearing, air compressors, etc. necessary for steering the ship and revolving the turrets; (2) four 10-inch gun carriages, each to be provided with pneumatic recoil and counter-recoil control, hydro-pneumatic elevating cylinders, pneumatic ammunition hoists and loading apparatus, etc.; (3) a complete pneumatic refrigerating apparatus. All of the above to be ready for installation within eighteen months from the date of contract, and to be ready for test within six months from the time thereafter that the vessel is delivered to the contractors in condition to receive it.

On completion, the plant to stand the following test: (1) The helm to be shifted from hard-a-starboard to hard-a-port (or the reverse) in sixteen seconds, and as often as once a minute; (2) both turrets to be turned at the same time and at the rate of one complete revolution in two minutes, the turrets to be at all times under complete control in accordance with the requirements of an efficient manœuvring of the guns; (3) the ammunition to be supplied, and the guns to be sponged and loaded with sufficient rapidity to fire five service rounds from each gun (twenty rounds in all), in volleys of four shots, at intervals of not more than three minutes between consecutive volleys. The system is to perform the above operations simultaneously. The initial air pressure in the reservoirs is to be not greater than that which they are designed normally to carry, and the terminal pressure must be great enough to carry on efficiently the work of steering, revolving the turrets, and manœuvring the guns.

Description of the machinery and mount (see plate).—Fig. 1 is a plan of the turret showing the arrangement of the guns, carriages, ammunition hoists, and loaders. Fig. 2 is a sectional elevation showing more in detail the arrangement and construction of the working parts. Fig. 3 is a vertical cross-section showing the top slide, pneumatic cylinders, and the valve for automatically checking the recoil and counter-recoil and for running the gun into battery. Fig. 4 is a sectional view of the ammunition car showing arrangement of guides, pulleys, and ropes or chains, by means of which the car is hoisted.

In the following description of the several figures like letters indicate like parts: A indicates the guns; A^1, the top slides; A^2, the bands by which the guns are secured to the slides; A^3, the pneumatic recoil cylinders cast in one with the top slide; A^4, pistons and piston-rods, the latter hollow and attached to the rear transom of the gun-carriage; A^5, the side levers upon which the top slides are mounted; A^6, the transom connecting the side levers, and to which the piston-rods are attached; A^7, a frictional arm or clamp mounted on each piston-rod between the stuffing glands of the cylinders and an adjustable stop secured to the top slide; A^8, the distributing valve, the spindle of which is attached to the just-described clamp; A^9, a check valve to prevent the escape of air to the other end of the cylinder during the counter-recoil.

The automatic action of the valve will be better understood by reference to the accompanying cut.

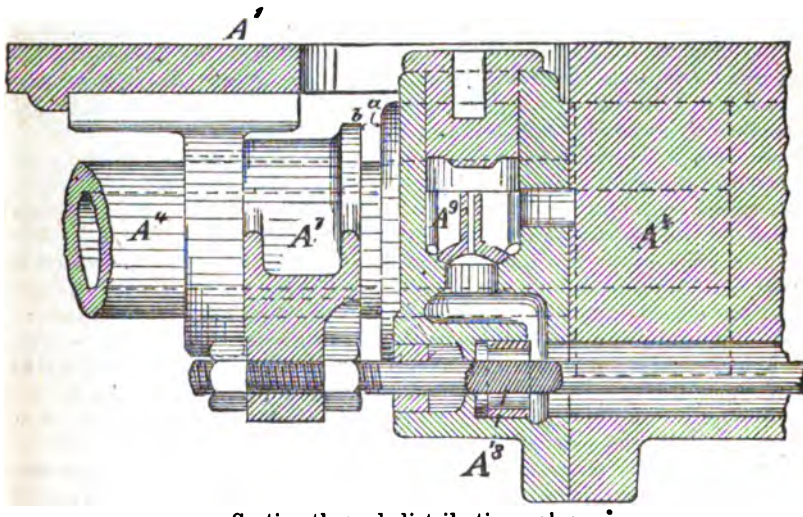

Section through distributing valve.

The clamp A^7 is mounted on the piston-rod, but it is free to move along the surface of the latter under pressure, being held in place only by friction. The valve A^8 is located in a passage under the cylinders, which passage forms a communication between the two cylinders and, also, between the opposite ends of each cylinder. In the cut, the gun is supposed to be in the firing position, and the distributing valve is open.

Upon firing, the recoil moves the recoil-cylinders to the rear, and the travel represented by *a b* closes the distributing-valve and cuts off communication between the opposite ends of the cylinders. At the point *b*, the stuffing-gland comes in contact with the clamp and carries the latter with it along the piston-rod throughout the remainder of the recoil. The valve is thus kept closed, and the air in the cylinder, originally at a pressure of about 500 pounds to the square inch, is further compressed until finally it brings the cylinder and gun to a rest. The clamp is now in contact with the stuffing-gland, and the clearance space *a b* is on the other side, between the

clamp and the stop on the slide. The instant the gun comes to rest, the pressure on the front of the piston starts the gun out to battery, and the movement of the cylinder that takes place before the stop on the slide comes in contact with the clamp opens the valve; the high-tension air escapes past the check-valve A^9 to the rear side of the piston, where it is trapped by the fall of the check-valve and forms a counter-recoil cushion. The return to battery is continued by the excess of pressure on the front side due to the difference of areas of the two sides, this difference being the area of the cross-section of the piston-rods. The air in rear of the piston gradually escapes to the other end of the cylinder through a hole in the check-valve, the hole being too small, however, to affect the cushion.

B indicates the brackets on which the gun-carriage pivots at B^1; they are secured to the floor of the turret.

C is a hydro-pneumatic press for elevating or depressing the breech of the gun; it, also, is secured to the turret floor. C^1 is the ram, the head of which takes against the transom A^6. C^2 is a reservoir containing a non-congealable liquid; it connects with the bottom of the press by the pipe C^3. This reservoir has a capacity greater than that of the press-cylinder, and hence will not be full when the ram is down.

To elevate the breech of the gun, air under pressure (from the same source as that supplied to the recoil-cylinder) is admitted to the top of the reservoir, and the pressure, forcing the fluid under the ram, lifts it and the breech of the gun with it. At the required elevation the current of air is shut off by means of a regulating valve; the same valve also allows of the escape of air from the reservoir, and a consequent return of the liquid from under the ram and depression of the breech. The communication between the press and the reservoir is of sufficient size to permit a rapid movement of the ram, but is not such as to interfere with the stability of the gun during recoil it is regulated by a valve in the pipe not shown in the drawing.

D D are brackets secured to the rear end of the gun-carriage for mounting the telescopic rammer D^1; and D^2 is the swab for cleaning the powder-chamber. D^3 represents the guides for the ammunition-car D^4; they are set obliquely to the axis of the turret, and the upper portion forms a curve of which the centre is the pivot B^1. While in this upper portion the car will travel in an arc concentric with that through which the breech of the gun moves, and, being arrested in its ascent at the proper point for loading, the shell and charge can be pushed home with the gun at any elevation.

E is the pneumatic hoist for working the ammunition-car. E^1 is a rope or chain guided by pulleys E^2 to pulley E^3. By carrying the rope or chain over the pulley at B^1 no alteration in its length is effected through changing the elevation of the gun.

After passing over pulley E^3, the rope or chain is secured to an arm D^5, attached to and extending below the ammunition-car. (See Fig. 4).

G is a column securely fastened to the floor of the ship to give stability to the air-pipes and other mechanism that connect the machinery in the turret with the motive power in the hold. On the top end of the column, and above the floor of the turret, is a manifold G^1, to which are connected the high-pressure pipes G^2 that form the connection between the high-pressure receiver of an air compressor in the hold and the recoil-cylinders, and, also, between the receiver and the reservoirs of the elevating presses. The pipes G^3 connect the low-pressure receiver with the ammunition-hoist E and the telescopic loader.

H is a regulating valve worked by a hand-wheel, H^1, for controlling the pressure in the reservoir and operating the elevating press.

I is an engine, worked by compressed air, for revolving the turret by means of the gearing I^1. The rack on the outside of the turret is not shown in the drawings.

8-INCH PNEUMATIC GUN-CARRIAGE.

The same company is under contract to construct for the Navy a pneumatic gun-carriage complete, supplied with suitable pneumatic and hand gear for training and elevating, air-compressors, receivers, pipe, and all other machinery and appli-

ances necessary for its complete working and manœuvring as a carriage for an 8-inch B. L. R.

The material used in the construction of the carriage is to be principally cast steel, of domestic manufacture, having a tensile strength of not less than 50,000 pounds per square inch, and an elongation of not less than 20 per cent. in test pieces of the dimensions shown in the cut on page 339. The specimens for test pieces are to be cut either from coupons molded or cast on to some portion of the casting, or from sinking heads, when such heads are of sufficient size, the coupons or sinking heads to have the same treatment as the casting itself before the test pieces are cut from the same.

The carriage is to be delivered and set up for trial at the Annapolis proving grounds not later than June, 1888,* and the conditions of acceptance are that the performance under the test firing shall be equal to that of the best of the 8-inch gun-carriages built by, or under the direction of, the Ordnance Bureau of the Navy.

The contract price is $19,000.

In the foll owing description the letters used have reference to the figures in the plate.

Fig. 1 is a sectional plan of the carriage, showing the general arrangements of the parts. Fig. 2 is a vertical longitudinal section, showing the working parts more in detail. Fig. 3 represents a sectional view of the side brackets and an elevation of the top slide. Figs. 4, 5, and 6 are sectional views of the recoil cylinders and valves. Fig. 7 is a sectional view of the centre pivot, showing deck supports and multiple connections for the transmission of the compressed air for working the gun, carriage, and loader. Fig. 8 is a sectional view of the mechanism for working the reversing clutches of the traversing and elevating gear.

A indicates the gun (shown in dotted lines) at its extreme angle of elevation; $A,^1$ the trunnions; A^2, the elevating band.

B B are the side brackets, firmly secured to the bed-plate B^1. B^1 has downward-extending brackets B^2, to which are pivoted rollers B^3, traveling in a circular deck-plate B^4. The carriage is centrally pivoted at B^5. B^6 is the rear transom, having bearing-wheels B^7, pivoted under each side bracket and traveling on a circular deck-plate B^8. The deck-plate has a toothed rack B^9 on the inner edge, and an elevated projecting flange B^{10} to prevent the carriage from jumping the deck ring.

C is the top slide, securely locked by jibs to the T-shaped girders formed on the top edges of the side brackets. Reaching downwards from the top of the slide are two strong arms or brackets C^1, to which are attached the piston-rods C^2. C^3 indicates the pistons, and C^4 the recoil-cylinders cast in one with the brackets.

It will be seen that in this mount the recoil-cylinders are stationary and the pistons move, whereas the reverse is the case in the turret mount. The principle of controlling the recoil and counter-recoil, however, is the same in both cases, and need not be described.

The course of the compressed air during the counter-recoil is, briefly, as follows: The valves *a* and *b* (see Figs. 4 and 5) begin to open almost at the commencement of the counter-recoil, no matter what position the piston may be in with reference to the cylinder; the final amount of the opening is regulated by the fixed adjustable stop *f*. The air then escapes at the port *c*, passes thence through the hollow circular valve *a* and port *d* by the check-valve *e*, and thus to the forward end of the cylinder. As the gun goes out to battery the air gradually escapes to the other side of the piston through a hole in the check-valve, but not so rapidly as to lessen the effectiveness of the cushion. *g* is a vacuum-valve.

D is an engine, on the inside of the carriage, for training and elevating. It is driven by compressed air and controlled by a follow-up slide motion D^1, actuated at the will of the operator by means of the hand wheel D^2 near the breech of the gun.

The traversing of the engine is effected through the medium of the spur gearing D^3, worm gear D^4, longitudinal shaft D^5, and pinion D^6, the last gearing in the circular rack D^9.

* Time has been extended.

The elevating and depressing are performed through the agency of the train of gears C, cross-shaft C^1, mitre-wheels C^2, and worms C^3, the last supported on bearings or the side brackets and working into the arcs C^4 at the end of levers C^5. The levers are pivoted at C^6 and elevate or depress the sliding blocks D, which are pivoted directly to the elevating band at D^2. The blocks are clipped under the flanges on top of the levers and have interposed elastic cushions D^1 to absorb the shock of recoil.

The engine works always in the same direction, and the reversal of the motion of train and elevation is effected by means of the clutches E situated, one on the shaft C^1, and the other on the crank-shaft; and by the same means the operation of training may be carried on independently of that of elevating, and *vice versa*.

Without going too much into details, this clutch action may, perhaps, be made sufficiently clear by reference to the elevating gear as shown in Fig. 1. If the clutch E on the shaft C^1 engage in the sleeve x, the motion will be in one direction; if it engage in the sleeve y, the interposition of the idle wheel z in the outer train of gears C will cause a reverse motion of the shaft C^1; if the clutch occupy the position shown in the drawing, both sleeves will revolve independently of the shaft, and the mitre wheels C^2, worm C^3, etc., will be thrown out altogether. Similarly, by means of the clutch E on the crank-shaft, the elevating gear may be thrown in or out of action, or its motion reversed, without in the least interfering with the operation of training.

The clutches are controlled by means of rods in hollow shafts worked by a screw and rack as shown in Fig. 8, the rack being attached to and operated by rods and handles E^1, the latter at the breech of the gun. The follow-up motion D^1, also operated from the breech, can be used for final adjustment of train and elevation.

G G are brackets attached to the rear end of the carriage, and at their extremities G^1 is pivoted a platform G^2, at the rear end of which is formed a strong sleeve. Into this sleeve is secured the telescopic loader G^3, and on its left side is the cylinder G^4, having a piston and rack piston-rod G^5, the latter gearing into a quadrant G^6. The quadrant is at one end of a shaft having bearings in the pivoted platform, and at the other end is the pinion G^7 engaging in the stationary rack G^8, secured to the bracket G. Air being admitted through the platform trunnions to the cylinder G^4 in rear of the piston, the piston and rack are forced forward, thereby revolving the quadrant G^6 and pinion G^7. The pinion climbs up the stationary rack G^8 and thus brings the loader into line with the axis of the gun when the latter is in the loading position; the shell and charge being pushed home, the air is allowed to escape from the cylinder, and the loader returns by gravity to the position shown in the drawing.

The air may also be admitted through G^9 to either end of the loader and exhausted therefrom by means of the valve H.

The compressed air is furnished to the receivers by an engine in the hold of the vessel. From the receivers it passes through pipes to the mutiple joint B^6, and thence through the pivot B^5 to the recoil cylinders (500 pounds to the square inch), or to the engine and loader (80 pounds to the square inch). B^6, it will be understood, is stationary, while B^5 is fixed in and revolves with the carriage bed. (See Fig. 7.)

GUN TRIALS.

PNEUMATIC DYNAMITE GUN.

During the past year the dynamite gun has been subjected to two notable trials. The first of these was for destructive effect; the second, for rapidity of fire and accuracy. Both trials were made in the presence of the Navy Pneumatic Dynamite Gun Board, and the following account is chiefly drawn from the Board's official report:

The trial for destructive effect took place on September 20, in New York Harbor. The gun used is the 8-inch pneumatic gun mounted at Fort Lafayette. The target was the Government schooner *Silliman*, moored head and stern in the waters of the

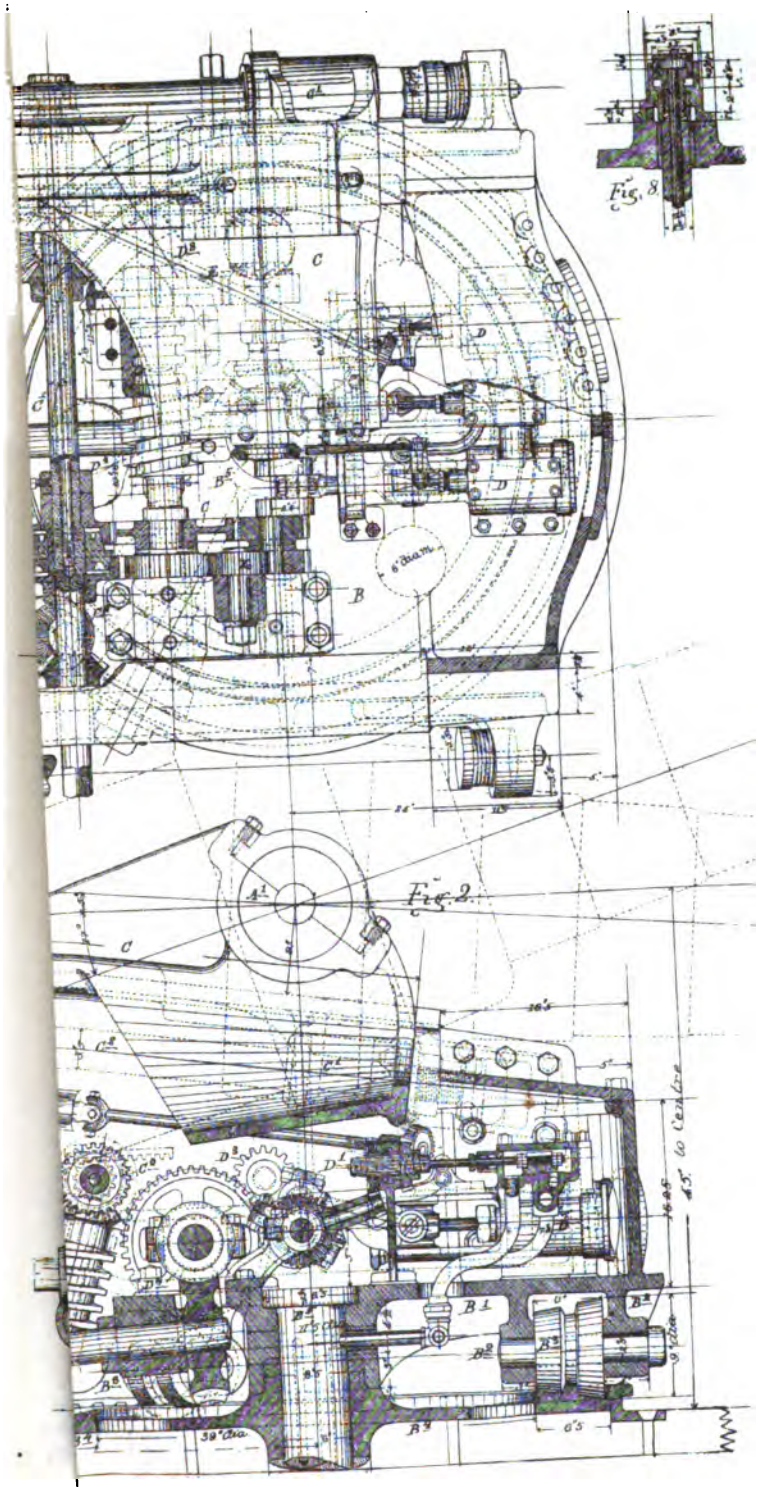
Fig. 8
Fig. 2
6" diam.
39" dia.
45" to Centre
9" dia.

bay, the vessel's stern being toward the firing-point and distant therefrom 1,864 yards. The *Silliman* was of the following dimensions: Length, 79 feet; breadth, 22 feet; depth, 8 feet 6 inches. The vessel when moored had her two masts and bowsprit standing.

In all six shells were fired. The first one fired was loaded with sand; the others were charged each with 50 pounds of gelatine and 5 pounds of dynamite No. 1, and fused with two fuzes (one above water and one below water action), each containing 30 grains of fulminate of mercury. The weights of the charged projectiles ranged from 136 to 137 pounds. The times of flight varied between 10.5 and 10.7 seconds. The weather was fine, and there was no wind.

First shot.—Trial for range. Projectile loaded with sand; weight, 141 pounds. Elevation, 14° 52′. Aimed to the right so as not to hit the target. Firing pressure, 590 pounds; final pressure, 490 pounds. Struck 24 yards to the right and 27 yards short, the stern of the schooner being the point reckoned from.

Second shot.—Elevation, 14° 52′. Aimed to hit target. Firing pressure, 595 pounds; final pressure, 485 pounds. Struck 8 yards to the left and 10 yards short. It entered the water properly for torpedo action, but did not explode. No satisfactory reason for this failure to explode has been discovered by the board.

Third shot.—Elevation, 14° 56′. Aimed to hit target. Firing pressure, 605 pounds; final pressure, 200 pounds, the result of accidentally opening the firing valve a second time. The shell struck a little astern and on the starboard quarter, entering the water at once and exploding, apparently, at the proper depth for torpedo action. It may be here remarked that this depth can be pretty well estimated by the character and height of the water thrown up. Upon boarding the schooner after this shot, it was found that the mainmast had been broken off just above the deck; it fell over the port side. The mast, where it broke off, was very rotten, there being only a slight shell of sound wood on the outside; it was also very slightly supported. Bulkheads were thrown down, and there were other evidences of the shattering effect of the explosion. There were about 2 feet of water in the schooner, and the planking under the starboard quarter appeared to be breached. The moorings of the schooner on the starboard quarter were disturbed by this shot, so that the vessel drifted a few feet away from the gun and assumed a position slightly across the line of fire, the stern being to the left as viewed from the gun.

Fourth shot.—Elevation, 14° 56′. Aimed to hit target. Firing pressure, 610 pounds; final pressure, 505 pounds. This projectile struck the water a short distance from, and abreast of the starboard quarter; entering the water, it exploded about abreast of the centre of the schooner and very near, if not under her. The torpedo action of the projectile was perfect, and it follows that the under-water fuze acted at the proper depth for this target, i. e., from 6 to 10 feet. The centre of the schooner was raised well up, her back broken and penetrated by a column of water, and the vessel fell back a complete, disintegrated wreck. Upon examining the wreckage it was seen that it was not entirely caused by the shattering effect of the projectile, but that the explosion was near enough to show the peculiar cutting and twisting effect of high-power explosives on sound wood. The wreckage for the most part was still held together by the chains and moorings; it drifted, however, about 25 feet to the left, and away from the gun.

Fifth shot.—Elevation, 14° 52′. Aimed at wreck of foremast. Firing pressure, 620 pounds; final pressure, 520 pounds. This projectile exploded 3 or 4 feet above water, over the wreck and abaft the foremost. It is supposed that it struck some of the wreckage, causing the circuit of the above-water fuze to close.

Sixth shot.—Elevation, 14° 52′. Aimed at wreck of foremast. Firing pressure, 612 pounds; final pressure, 520 pounds. Struck abreast of the wreckage, but about 10 yards to the right; entering the water, it exploded, probably at a depth of 6 or 7 feet, throwing up a column of water of small diameter to a height of at least 100 feet.

"It is very important to observe that in these experiments, undertaken by the company for destructive purposes, the air pressure was reduced from 1,000 pounds, the normal amount used in other experiments witnessed by the board, to about 600 pounds, the elevation being increased a corresponding amount. This could have been for but one purpose, viz., to prevent ricochet and insure a proper entry into the water for torpedo action. This indicates the necessity for a high trajectory for a successful torpedo action of the projectile.

"Lieutenant Zalinski stated that the angle of the fall of the projectile was 18° or 19°. While the accuracy of the gun is such that this high trajectory, with its accompanying narrow danger zone, may give satisfactory results when the gun is on a steady platform and the target stationary, it will be a very serious condition when both platform and target are moving."

The object of the firing of the 30th September was to group the shots as near together, and to fire them in as short a time, as possible. The shells were carefully selected and loaded with sand. Seven of them weighed exactly 140 pounds each; two, 140.5 pounds each; and one, 142 pounds. The centre of gravity varied between 16 and $16\frac{3}{16}$ inches from the forward end. The firing pressure was 610 pounds; the elevation, 14° 56′; the times of flight averaged about 11 seconds. The target, consisting of a single buoy with a boat attached, was placed 1,868 yards from the gun. During the firing the wind blew with a force of from 3 to 4 (nautical reckoning), and might be termed broad off the port bow, looking towards the target from the gun.

The 10 rounds were fired in 10 minutes 45 seconds. Two of the shells broke up and two ricochetted, and either breaking up or ricochet is fatal to the torpedo action of the projectile.* The flight was remarkably steady. All of the shot fell to the right of the target, and no attempt was made to correct the error, which was probably caused by the wind. The accuracy of the fire may be summarized as follows:

	Yards.
Point of mean impact:	
Short	13
Right	13.3
Extreme errors:	
Longitudinal	37
Lateral	8.7
Mean errors:	
Longitudinal	13.2
Lateral	3.6
Dimensions of rectangle containing 25 per cent. of probable hits:	
Longitudinal	22.3
Lateral	6.1

Following the fire for rapidity, a sand-loaded projectile weighing 140 pounds was fired for extreme range. Elevation, 32° 42′. Firing pressure, 975 pounds; final pressure, 825 pounds. Time of flight, 24.5 seconds. Estimated range, about 4,000 yards.

Two projectiles, sand loaded, representing the 100-pound shells,† were now fired. They weighed 203 and 204 pounds, respectively. Elevation, 15°. Air pressure, 750 pounds; final pressure, 625 and 615 pounds. Time of flight, 10 seconds. Allowance was made in aiming for the effect of the wind. No boat was out to mark the fall of these shots, so that the point of impact could only be estimated; they seemed to fall about 100 yards short and a little to the left. At the time the projectiles were fired the water was quite lumpy and the wind blew with a force of 4 to 5 (nautical). Neither of these projectiles was as steady in the air as were the 60-pound shells. Upon striking the water the tails of both projectiles broke off, and the shells proper ricochetted a long distance, the first about 20° to the left, and the second about 10° to

* Since these experiments were made the construction of the projectile has been greatly improved, and the possibility of breaking up greatly diminished or removed.

† The shell are designated by the weight of bursting charge of explosive.

the right, with a single, very high ricochet trajectory. It is probable that the lumpy condition of the water had something to do with the several ricochet shots of the day. The 100-pound shells carry the centre of gravity about 1 foot farther to the rear than do the 60-pound shells, while the steel fins have no greater surface, though placed on a longer tail.

The findings of the board, deduced from careful consideration of these and other experiments witnessed, are given in full as follows:

"(1) The dynamite gun is a new instrument of warfare, which has its own peculiar functions in time of war. It can not replace any existing weapon, nor can its place be wholly taken by any other.

"(2) The value of compressed air as a means of throwing projectiles from a gun is chiefly due to the ability of the gunner to exactly reproduce a shot, or to accurately increase or decrease the range at will, and to the accuracy of fire with low velocities.

"(3) The machinery employed by the company to control air at a great pressure has been brought to a high degree of efficiency.

"(4) The accuracy of the gun is remarkable.

"(5) The extreme range is probably about 2 miles. The effective range of projectiles in the trials witnessed by the board has been from 1,477 to 1,868 yards.

"(6) The power of the projectile has been determined only in a slight degree.

"(7) The gun appears to be perfectly reliable in its action.

"(8) The system is not a simple one. The gun does not require an expensive plant to manufacture and its cost should be moderate. Guns of this pattern can be made in any of the large towns of the country where there are machine-shops and foundries.

"(9) It is an important weapon for harbor defense.

"(10) It is adapted to naval warfare whenever mortar fire can be used to advantage.

"(11) A modification of it may be valuable to project torpedoes from ships when at short range.

"(12) It is not expedient to adopt it as a part of the battery of ships of war until after the efficiency of the guns on board the dynamite cruiser now building has been ascertained and their performance afloat observed."

The dynamite-gun cruiser is to have three 15-inch guns in lieu of the 10.5-inch originally named in the contract. These guns will be able to throw shells containing charges of 100, 200, and 600 pounds of explosive gelatine, the smaller charges to be fired from a sub-calibre de vice recently developed. The range of the heaviest shell will be the one mile called for in the contract, that of the lighter ones will be proportionately greater. The length of the gun has been shortened to 55 feet, and designs have been prepared for other still shorter guns.

The 15-inch gun built for the Italian Government is now undergoing trial at Fort Lafayette, N. Y. This gun is only 40 feet in length.

GERMAN PNEUMATIC GUN.

An April number of Le Temps gives the following account of the then recent experiments in Germany with a 30-centimetre pneumatic gun:

The experiments were made under the direction of the German Admiralty.

The gun is of 11.8 inches calibre and measures 73.8 feet in length. The shell are of drawn bronze, 81.5 inches in length and capable of containing a bursting charge of 600 pounds of explosive; the walls are only 0.16-inch thick. The target was an old wooden ship anchored at a distance of 2,080 yards from the firing point.

After a few preliminary rounds for range and pressures, two rounds with shell, charged each with 66 pounds of nitro-gelatine, were fired at the target. The first shell struck quite close and exploded about two seconds after entering the water; the vessel's mainmast and bowsprit went by the board, the deck-house was demolished, and the starboard bulwarks were stove in. The second shot, breaking the vessel in two, completed the work of destruction.

No official report substantiates this account, and the similarity of the experiment to that made with the Zalinski gun in September, 1887, is striking, to say the least.

MAXIM DYNAMITE GUN.

Mr. Hiram Maxim, the inventor of the automatic machine and R. F. guns, has recently secured letters patent on designs for a dynamite gun for which are claimed several advantages over the Zalinski gun.

In the preamble to the patent specification Mr. Maxim says:

"It has heretofore been customary to utilize compressed air in dynamite guns for discharging the projectile therefrom, and in order to obtain a high muzzle velocity of the projectile it has been necessary to make such guns with very long barrels, and to employ air under very high pressure.

"By my invention I am enabled to reduce greatly the length of barrel and the pressure of air employed, and, at the same time, to obtain a very high muzzle velocity."

Instead of charging the gun with compressed air alone, Mr. Maxim uses a mixture of air and some volatile hydrocarbon (gasoline, for example) in such proportions that there shall be just sufficient oxygen in the air to convert the hydrogen of the hydrocarbon into water and the carbon into carbonic-acid gas. This mixture may be used at a pressure equal to about one-half of that ordinarily employed in pneumatic dynamite guns. After the projectile has been driven by the expansive force of the gas that enters at the initial pressure through from one-quarter to a half the length of the bore, the mixture is caused to explode, and the pressure is at once increased about eightfold.

The apparatus devised for causing this explosion may be briefly described as follows: In the wall of the gun, some distance in advance of the projectile, is an axial chamber, in which is placed a detonating cartridge, so arranged as to have a longitudinal play in the chamber of about a quarter of an inch; the outer end of the chamber is fitted with a steel firing-pin. The compressed air and hydrocarbon having been introduced into the bore, the projectile, moves forward until it uncovers the interior opening of the axial wall-chamber and the gas, impinging upon the detonating cartridge, drives the primer against the firing-pin and ignites the mixture in the bore.

Two projectiles have been designed, one for rifle, the other for smooth-bore guns. In the latter case the rotary motion is imparted by means of vanes or screw-blades, as in the Zalinski shell, and the bursting charge of the shell is detonated by means of a capsule and firing-pin in the hollow tube to which the blades are attached.

It is not understood that any gun of this description has yet been built.

U. S. ARMY GUNS.

Army experimental 8-inch B. L. R.

[Mean results of firings made with Du Pont's brown prismatic powder, adopted for test of gun.—Powder, R. Q. type; density, 1.825.]

Powder.		Weight of projectile.	Muzzle velocity.	Pressure per square inch of powder-chamber.	Muzzle energy.
Lot.	Weight.				
	Pounds.	*Pounds.*	*Foot-seconds.*	*Pounds.*	*Foot-tons.*
1	110	289	1,867	36,550	6,983
	106	300	1,830	35,700	6,965
2	106	300	1,830	33,850	6,965
	110	289	1,875	35,000	7,043
	110	300	1,860	35,800	7,195
*3	103	300	1,823	36,000	6,912
	105	289	1,872	36,500	7,021
	106	300	1,850	37,500	7,118

*Number of rounds fired up to date of March 13, 1888—138.

The gun is now in the hands of the Board for Testing Rifled Cannon, and will be tested for endurance, rapidity of fire, etc., according to law.

Army experimental 5-inch steel B. L. siege rifle.

[Preliminary firings to determine a suitable powder.]

Powder.		Weight of projectile.	Muzzle velocity.	Pressure per square inch of powder-chamber.	Muzzle energy.
Kind.	Weight.				
	Pounds.	*Pounds.*	*Foot-seconds.*	*Pounds.*	*Foot tons.*
Sphero-hexagonal; density, 1.728	10	43	1,628	25,000	790
	12	43	1,803	32,050	969.2
	12.5	43	1,829	34,961	997.2

Gun weighs 3,660 pounds; length of bore, 27 calibres. Firings made on new steel siege carriage; number of rounds fired up to date of February 24, 1888—6.

Army experimental 12-inch B. L. rifled mortar.—Cast-iron, steel hooped.

[Preliminary firings to determine a suitable powder.]

Powder.		Weight of projectile.	Muzzle velocity.	Pressure per square inch of powder-chamber.	Muzzle energy.
Kind.	Weight.				
	Pounds.	*Pounds.*	*Foot-seconds.*	*Pounds.*	*Foot-tons.*
Sphero-hexagonal; density, 1.795	65	627.5	1,043	26,950	4,732
	33	627.5	704	9,900	2,156
Bl'k prism; density, 1.828	58	630	1,044	27,000	4,750
Brown prism, R. H.; density, 1.825	72	627.5	1,065	22,200	4,934
	80	627	1,151	27,150	5,763
	37	627.5	710	Less than 900	2,193

Gun weighs 14 tons. Maximum measured range with 65 pounds charge, O. X. powder, 9,385 yards. Total number of rounds up to date of April 4, 1888—73.

Army experimental 7-inch steel B. L. rifled howitzer.

[Preliminary firings to determine a suitable powder.]

Powder.		Weight of projectile.	Velocity at 100 feet from muzzle.	Pressure per square inch of powder chamber.
Kind.	Weight.			
	Pounds.	*Pounds.*	*Foot-seconds.*	*Pounds.*
L. X. B.; density 1,706	6	105	840	15,000
	7	105	922	19,275
	8	105	994	23,000
	8.5	105	1,038	25,300
	9	105	1,074	26,775
	9.25	105	1,093	28,400

Gun weighs 3,750 pounds; length of bore, 12.4 calibres.

THE BENBOW'S 111-TON GUNS.

The trials of the Benbow's 111-ton guns were brought to a conclusion on the 14th of March last, when sixteen rounds were fired with full service weight of charge and projectile.

The results are considered, on the whole, highly satisfactory, although one gun was *hors de combat* for at least thirty minutes after the second round. This was due to the jamming of the obturator, a Vavasour modification of the de Bange system. The charge and projectile used weighed 1,000 pounds and 1,800 pounds respectively.

The mounts are very similar to those now making for the *Miantonomah*, *i. e.*, the gun is held down on its bed by steel bands and recoils in its bed on the slide; the latter is pivoted in front and is elevated, and the gun with it, by a hydraulic ram. It has been found that the 12-inch guns on board the *Howe*, which are secured to their beds by bands as above described, rotated slightly on their axes upon firing. The rotation is due to the twisting reaction caused by the motion of the projectile along the rifle bore; and it is proposed to prevent such derangement in future by means of studs screwed up through the bottom of the bed into the gun.

WOOLWICH 156-TON GUNS.

Designs have lately been prepared at the Royal Gun Foundry, Woolwich, for a 156-ton gun.

OTHER ENGLISH GUNS.

The subjoined table shows the number of new B. L. guns issued for sea service between January 1, 1887, and January 1, 1888:

Nature.	Number.
16.25-inch, 110 tons	2
13.5-inch, 67 tons	4
12-inch, 45 tons	2
9.2-inch, 22 tons	7
8-inch, 15 tons	15
6-inch, 5 tons	122
5-inch, 38 cwt	61
4-inch, 22 cwt	25
Total	238

A return of the British War Office, dated April 28, 1888, furnishes the names of the ships of Her Majesty's service that were then awaiting their armaments, the dates by which the armaments were originally promised, and the estimated dates of their probable delivery.

Evidently using data similar to those contained in the War Office return as a text, the First Lord of the Admiralty says in his annual report:

"Considerable delay has occurred in the delivery of guns at the dates previously promised. Several of the heavier ironclads are now awaiting their armament, and the programme of dockyard work has been deranged, and the cost of completing ships has been increased by these delays. So few breech-loading guns of large calibre have hitherto been made in this country that all concerned in their manufacture, whether they be private contractors or Woolwich factory, seem to have antedated the finish of their work and miscalculated the time necessary for its completion. As experience is gained, it is to be hoped that punctuality of delivery will be associated with it."

Following is the official statement of the War Office:

Name of ship.	No. of guns.	Calibre and weight of guns.	Where manufactured.	Dates by which guns were originally promised.	Dates of probable delivery.
Collingwood	4	12-inch, 45 tons	Whitworth	May, 1887	Nearly ready.
Howe	4	13.5-inch, 67 tons	Royal Gun Factory	Sept., 1887	1 issued; 1 by June 30, 1888; 2 by September 30, 1888.
Camperdown	4	13.5-inch, 67 tons	Royal Gun Factory	No promise.	March 31, 1889.
	6	6-inch, 5 tons	Royal Gun Factory	Dec., 1887	3 nearly ready.
Anson	4	13.5-inch, 67 tons	Elswick	(*)	1 by September 30, 1888; 1 by November 30, 1888; 1 by January 31, 1889; 1 by March 31, 1889.
	6	6-inch, 89 cwt.	Royal Gun Factory	Sept., 1885	Completed in 1886, and issued to other ships. Returned for chase-hooping; now ready.
Undaunted	2	9.2-inch, 22 tons	Elswick	July, 1886	Under inspection.
Australia	2	9.2-inch, 22 tons	1 Elswick	July, 1886	Under inspection.
			1 Royal Gun Factory	June, 1887	May 31, 1888.
	10	6-inch, 5 ton	Royal Gun Factory	Dec., 1887	Ready.
Narcissus	2	9.2-inch, 22 tons	Whitworth	Mar., 1887	June 30, 1888.
	10	6-inch, 5 tons	2 Whitworth	Aug., 1887	Nearly ready.
			8 Royal Gun Factory	Dec., 1887	
Galatea	2	9.2-inch, 22 tons	1 Whitworth	Mar., 1887	August 31, 1888.
			1 Royal Gun Factory	June, 1887	May 31, 1888.
	10	6-inch, 5 tons	2 Whitworth	Aug., 1887	Nearly ready.
			8 Royal Gun Factory	Dec., 1887	
Immortalité	2	9.2-inch, 22 tons	Royal Gun Factory	Sept., 1887	August 31, 1888.
	10	6-inch, 89 cwt.	Royal Gun Factory	Sept., 1885	Completed in 1886, and issued to other ships. Returned for chase-hooping; now ready.

* Fourteen months from passing of steel; should be completed by April, 1888.

KRUPP 40-CENTIMETRE GUNS.

It is reported that the 110-ton gun built for the Italian Government, which was left at Essen when the other three of the order were shipped, has been fired two hundred times and is still in good condition.

Krupp is now engaged upon a longer gun of the same calibre (40 centimetres) which will weigh about 139 tons. The projectile, when fired with the maximum charge, will have a muzzle energy equivalent to a penetration in wrought-iron of nearly 4 feet (47.5 inches).

WIRE-WOUND GUNS.

Russian 6-inch gun.—Le Yacht of March 24 contains a brief notice of the trial of a 6-inch wire-wound gun built upon the Longridge principle at Aboukoff, in Russia;

up to date 200 rounds had been fired. The principal details of the firing, given in English units, will be found in the following table:

No. of rounds.	Weight of projectile.	Weight of charge.	Mean pressure.	Maximum pressure.
	Pounds.	*Pounds.*	*Foot-seconds.*	*Tons per sq. in.*
7	72	27 to 38	Not taken.	Not taken.
19	72	39.5	2,150	19.3
11	90	39.5	1,937	19.4
163	122	39.5	1,715	21.3

The firing is to be be continued up to 500 rounds.

The gun is 35 calibres in length, and weighs 5.5 tons. The wire weighs about 1,650 pounds; it is coiled direct upon the A tube, and the ends of each layer are secured independently. No solder is run on. The jacket, in one with the trunnion, is of cast-iron; all other parts are of steel.

The results are considered so satisfactory that it has been decided to construct an 8-inch and a 12-inch gun on the same design.

Woolwich 9.2-inch gun.—The Army and Navy Gazette of December 10 announces that a 9.2-inch wire-wound gun is making at the Woolwich Arsenal after designs submitted by Colonel Maitland. The system of construction is as follows:

The A tube is made much thicker over the chamber than elsewhere, and the thick part is then turned down in steps, deepest toward the centre. Over the hollow thus formed, which extends nearly half the length of the gun, is coiled a carefully selected ribbon wire, ¼ by ⅛ inch in section, and having a tensile strength of 80,000 pounds to the square inch. The ends of the wire, after heating in a blow-pipe, are bent to the proper direction and secured by screws and plugs. When the hollow in the tube has been quite filled up, the trunnion ring and jacket are shrunk on over the wire and are locked together by a locking-joint.

The weight complete will be 22 tons, exactly that of the service hooped-gun; but it is expected that the wire gun will be able to use a charge of 270 pounds of prism brown powder, while the service gun is limited to 175 pounds. The calculated muzzle velocity resulting from the charge is 2,370 foot-seconds, and the penetration in wrought-iron 21 inches.

Mr. Longridge, it is reported, does not approve of Colonel Maitland's adaptation of his principle, and is now busily engaged in preparing a gun on plans of his own to be put in competition with the Woolwich gun.*

The Shoeburyness Jubilee round.—In April last, at Shoeburyness, England, was fired the much-talked-of "Jubilee" round, or, in other words, a round for range.

The firing was from the Elswick 9.2-inch wire gun, laid at an angle of 40° elevation. The weight of projectile was 380 pounds; the powder charge was increased to about 270 pounds, giving a muzzle velocity of 2,300 foot-seconds. The observed range was 21,000 yards, or nearly 12 statute miles. (From The Engineer.)

QUICK'S 3-INCH B. L. R.

This gun was designed by Mr. George Quick, late an engineer in the British Navy, and is introduced by the Quick Ordnance Company, Westminster, England.

The following are the principal data:

Calibre	inches	3
Weight, including breech-block	pounds	1,591
Length of gun	inches	109
Length of bore	calibres	34

* Presumably the gun mentioned on p. 358.

Breech Mechanism.

Quick's 3 inch B.L.R.

Fig. 1.

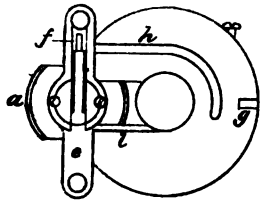

Fig. 2.

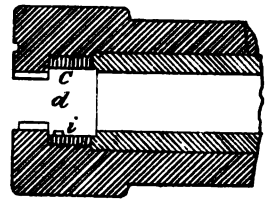

Fig. 3.

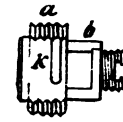

Fig. 4.

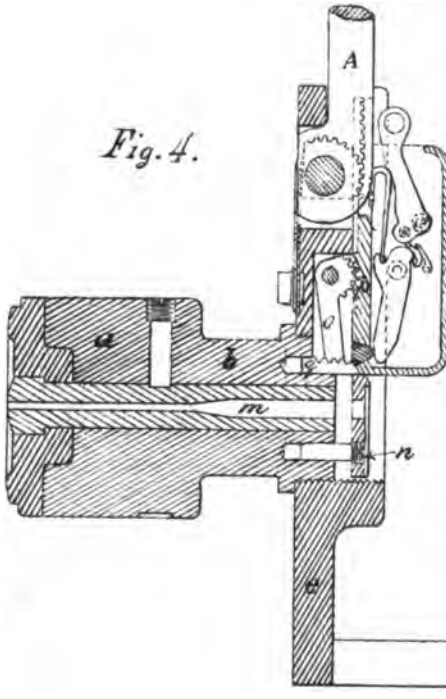

Fig. 5.

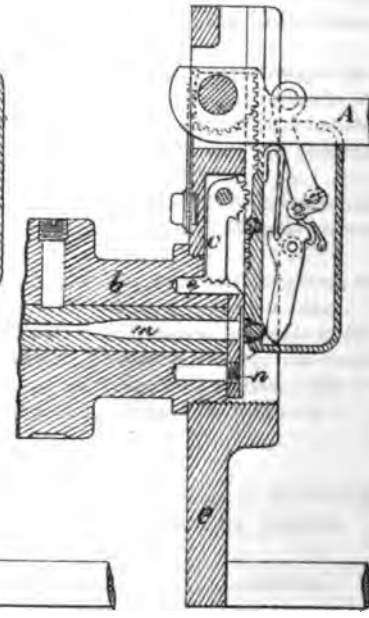

Length of chamber	inches..	13
Diameter of chamber	do....	3.625
Capacity of chamber	cubic inches..	134.16
Number of grooves		15
Depth of grooves	inches..	.05
Pitch of rifling, uniform	calibres..	27

The gun was tried at Erith, June 21, 1887, in the presence of a number of British army and navy officers. After some preliminary firing with a view to finding a suitable obturator, 5 rounds were fired for velocity and pressure with the following results:

No. of round.	Powder. Quick's cake.	Weight of charge.	Weight of projectile.	Muzzle velocity.	Pressure per square inch.	Remarks.
	Density.	*Pounds.*	*Pounds.*	*Foot-seconds.*	*Tons.*	
26	1.815	6.5	12	Not taken.	Did not exceed 14.	Steel ring obturator employed. Crusher gauge used with all but last shot. Velocities determined by Boulengé chronograph.
27	1.815	6.5	12	2,082	Did not exceed 14.	
28	1.770	5.562	12	2,032	Shot lost.	
29	1.750	5.5	12	2,180	14.05	
30	½ 1.170 ½ 1.750	6.125	12.25	2,164	Not taken.	

The test for rapidity of fire with dummy loading resulted in an average of 12 rounds per minute, one man performing both the loading and firing operations.

The "Quick's cake powder" used in the trial consists of ordinary powder pressed into disks of a diameter nearly equal to that of the powder-chamber, and about half an inch thick. Each disk is pierced by a 1-inch central canal and several smaller ones around the centre, and each has four studs on one side and four mortises on the other, so that any required number may be joined together to make up a charge.

The only marked feature in the construction of the gun is the breech mechanism, which is patented.

As will be seen by reference to the plate the forward portion *a* of the breech plug is considerably larger in diameter than the powder-chamber and also than the rear portion of the plug, *b*; and on opposite sides one-quarter of the thread is removed so as to form two parallel plane surfaces. The screw-box is fitted with a female screw *c* to receive the threaded portion of the plug. Extending from the screw-box, at right angles to the bore and parallel to the axis of the trunnion, is a recess of rectangular section *d*, having plain bearing surfaces on all sides. Now, by means of the lever handles *e f*, the plug can be rotated until one threaded portion is disengaged and can then be moved bodily to the left through the recess until the bore is unmasked for loading; this is all done by one continuous motion of the handles, and the same movement automatically opens the primer chamber and extracts the spent primer tube.

The plug is guided throughout by a pin on the lever traveling in the groove *h* in the face of the breech, and it is made impossible to withdraw it too far by stud *i* gearing into a shallow groove *k* cut in the side of the plug. After loading, the plug is caused to slide back through the recess until the threads engage, when the handles are turned through a right angle, which movement brings the nose plate close up against the gas-check. The lever handle A is then pulled out from the position shown in Fig. 4 to that in Fig. 5, when the plug is locked by the head of the handle entering the safety-catch *g* (Fig. 1), and the gun is made ready for firing.

In Figs. 4 and 5, *m* represents the primer chamber, *n* the extractor plate, and *o* the extractor lever with two arms, each of which has teeth, those in the upper arm gearing into the rack *p*, and those in the lower arm into the rack formed in the guide-pin *q* of the extractor plate.

The breech plug of heavy guns, according to the patent specifications, is operated by means of a pinion on the lever gearing in a rack screwed to the face of the breech, and the mechanism is made susceptible of the application of hydraulics. It is not known, however, that any gun heavier than the one here described has been made, or even commenced.

ELSWICK 11-INCH HOWITZER MOUNT.

The Elswick firm has recently made an 11-inch howitzer, to be mounted on a carriage specially designed for high-angle fire.

The gun weighs 10 tons 13 cwt. and fires a 478-pound projectile with a charge of 44 pounds of powder.

The mounting consists of a small cast-steel carriage, on which the trunnions rest, and which moves on the inclined sides forming a part of the platform. To each of these slides, at the bottom, is attached a recoil-cylinder having two chambers; the inner filled with fluid, the outer one with air. These two chambers communicate with each other and are also in independent connection with the corresponding chambers in the other cylinder.

The piston-rods are attached at their upper ends to the gun-carriage, and the pistons work in the fluid-chamber. Upon firing, the piston drives the fluid into the surrounding air-chamber, compressing the air therein and forming a cushion which gradually absorbs the recoil.

For loading, the howitzer, which is then in its lowest position, is laid horizontally. By means of the elevating gear this can be done by one man in fifteen seconds. A spring bearing is fitted in each trunnion block to receive the smaller trunnion arms of the howitzer; these take the whole weight of the gun while elevating, thereby greatly diminishing the friction and rendering the operation of elevating comparatively easy. After the gun is loaded, the opening of a valve allows the compressed air to force the fluid back into the central chamber underneath the piston, and the gun is returned to the firing position.

The mounting can be rotated through an entire circle by two men in one and a half minutes. The elevation is limited between 45 and 75 degrees.

CASUALTIES.

Rupture of the 340-millimetre de Bange gun.—This gun, which was exhibited at Antwerp in 1884 and is described in Gen. Inf. Series, No. V., was first subjected to trial at Calais, in August of last year. When there remained but five rounds to be fired to complete the experiments, progress was suddenly interrupted by the rupture of the tube.

The Army and Navy Journal of December 17 quotes from a letter from the Belgian agent of the Cail Company (of which company Colonel de Bange is superintendent) to the editor of the Journal de Bruxelles, as follows:

"During the hammering and assembling, Colonel deBange noticed a weak spot at about the middle point of the tube; but as this part of the gun is but little strained, and as he was pressed for time on account of the approaching opening of the Antwerp Exposition, where the gun was to be exhibited, Colonel de Bange gave the order to proceed with the construction.

"The tube parted at this very point."

The projectile used in the firing trials weighed 926 pounds.

Armstrong 10-inch gun.—An Armstrong 10-inch gun failed on proof at the Woolwich Arsenal, January 27, at the fourth round. The gun was only partly lined; the tube broke off just where the liner ends, and the forward portion was blown clean out of the muzzle.

The Woolwich authorities represent the occurrence as merely one of the small percentage of failures that is always to be expected in proof trials.

Longridge 6-inch gun.—The trial of the Longridge 6-inch wire-wound gun at Woolwich, April 26, resulted in blowing off the muzzle end of the cast-iron jacket at the

first round. The charge used was 34 pounds of pebble powder; weight of projectile, 98.5 pounds. The gun was made by a private firm.

The Hope gun.—The Hope gun burst at the first round. A description of this gun, with a statement of the remarkable claims made for it before trial, is given on page 311, No. VI.

DEVELOPMENT OF RAPID-FIRE AND MACHINE GUNS.

ARMSTRONG 36- AND 70-POUNDER R. F. GUNS.

A description, with dimensions, of the Armstrong 30-pounder is given on page 313 of No. VI.

The Elswick Company now make the gun of this calibre (4.″724) to throw a 36-pound projectile with a charge of 12 pounds of powder. The length of the gun is 33.1 calibres; weight, 34 cwt. The muzzle velocity is now 1,946 foot-seconds against 1,900 foot-seconds in the gun previously described, while the total energy has been increased from 751 to 945 foot-tons. The perforation in wrought iron corresponding to this energy is 7.3 inches.

Late authentic reports have been received of a round from this gun with a 12-pound charge of a new German powder, which gave an initial velocity of 2,380 foot-seconds. The energy and penetration corresponding to this velocity are respectively 1,414 foot-tons and 9.3 inches.

The gun is mounted on a rocking slide recoil mount similar to that adopted for use with the 3-pounder, but the cylinders are differently disposed. There are two of these, situated directly under the slide and parallel to the axis of the piece; in one is a Vavasseur piston with ports of variable apertures, and in the other a strong spring. The piston-rod passes through the two cylinders and is attached at its rear end to an arm projecting downwards from the breech of the gun. When the gun is fired it moves to the rear in the rocking slide to the extent of the recoil, which is limited to 9 inches; the recoil is checked in the one cylinder by the closing of the ports, and the stored-up energy in the spring of the second cylinder returns the gun to battery. The lower part of the mounting is formed by a strong transverse steel transom, which rigidly supports the mounting and at the same time affords substantial protection to the base of the structure and the man working behind it. Fixed to this is a lighter vertical shield to cover the crew from rifle fire, the upper portion being arranged to hinge back and thus to admit of a more extended view when using the gun at night. The under carriage is carried on ball-bearings running between the base-plate and the pivot-plate fixed to the deck. The training can be done by one man by simply putting his weight against the shoulder-rest. The rocking slide oscillates on trunnions and is elevated or depressed by means of a rack and pinion gearing connected to a worm, the worm-shaft operating from near the shoulder-piece on the left of the gun.

The breech is closed on the interrupted screw system, and one motion is saved both in opening and in closing by making the breech-block conical and forming it in two steps, the steps having their circumferences so slotted that the threads on one stand opposite to the blank spaces on the other.

The gun is fired by electricity. The circuit is completed by a pin in the breech-block coming in contact with an electric primer in the base of the cartridge. The contact, however, can be made only when the breech-block is closed and secured in position, and discharge at any other time is impossible.

In the course of some recent trials with the gun, 10 carefully aimed shots were fired in 1 minute 38 seconds, and another 10 rounds were fired from a man-of-war steaming past the target in 1 minute 40 seconds. All the shots fell within 40 yards either in front or rear of the target, and the direction was perfect. In the test for rapidity, the 10 rounds were fired in 47.5 seconds.

At various other trials 8 rounds have been fired in 32 seconds, 15 rounds in 1 minute, 20 rounds in 1 minute 32 seconds, 10 rounds in 40 seconds.

The 70-pounder R. F. gun, alluded to in the last number, is now complete and has been tried with satisfactory results.

The arrangements adopted for the service of the 36-pounder have generally been followed in the case of the larger gun.

The only details at hand are the following:

Calibre	inches..	5.5
Length of gun	do...	168
Length of bore	cals..	28
Weight of gun	cwt..	68
Weight of projectile	lbs..	79
Weight of charge	do...	36.5
I. V	foot-seconds..	1,924
Muzzle energy	foot-tons..	1,797
Perforation of wrought iron	in..	*10.5
Rapidity of fire	rounds per minute..	10

* Computed. $P = \frac{2.035}{.86\,\pi d}\sqrt{E}$

HOTCHKISS R. F. GUNS.

The Hotchkiss Company have extended the use of fixed ammunition to guns of 9-pounder and 33-pounder calibre. The smaller gun has been successfully tried both in France and Russia, and an experimental 33-pounder is reported as undergoing proof at the company's proving grounds.

The following is an abstract of the official firing trial of the 9-pounder recently made at Ochta, Russia: Weight of projectile, 8.8 pounds; weight of charge, 3.63 pounds brown powder (Sevran-Livry); average velocity at 200 feet from muzzle as determined by the Bréger chronograph, 200 feet between screens, 2,228 foot-seconds; observed chamber pressure for three rounds, 15.4, 15.8, and 16.1 tons per square inch. The mean deviations of ten shots fired at 1,000-yard range were: Vertical, 1.14 feet; lateral, 1.25 feet. The angle of elevation corresponding to this range was 0° 35′ (including jump).

A design for a 14-pounder has very recently been submitted to the Bureau of Ordnance, Navy Department.

The breech mechanism of these guns is, in all essential respects, the same as that of the 6-pounder and smaller calibres; other principal details are subjoined:

	9-pounder.	14-pounder.	33-pounder.
Calibre ... inches..	2.56	2.95	3.94
Weight ... pounds..	1,490	1,915	3,500
Length of gun ... inches..	119	144.5	174.2
Length of travel of projectile ... do....	94.5	103.3	137.8
Diameter of chamber at bottom of bore ... do....	3.15	3.54	4.42
Number of grooves	26	30	30
Depth of grooves ... inches..	.015	.02	.028
Inclination of grooves ... do....	0 to 6° 30′	0 to 6° 30′	0 to 7°
Length of line of sight ... do....	50.07	.....	63.58
Weight of projectile (steel and common shell and shrapnel)	8.8	14	33
Weight of powder charge ... pounds..	3.4	5.5	12.5
Weight of cartridge complete ... do....	15.2	.....	.....
I. V ... foot-seconds..	2,228	.....	1,970
Energy ... foot-tons..	303	.....	889
Perforation of wrought iron ... inches..	*5.3	.....	*7.9

* Computed. $P = \frac{1.645}{2.41\,\pi d}\sqrt{E}$

Fig. 1.

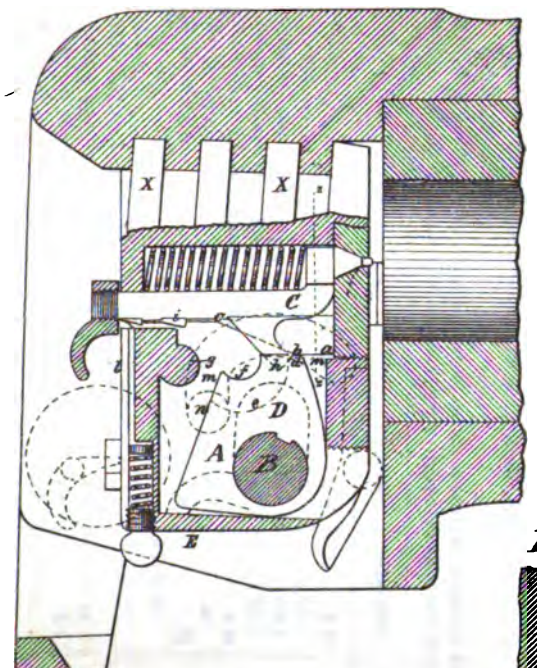

Fig. 2.

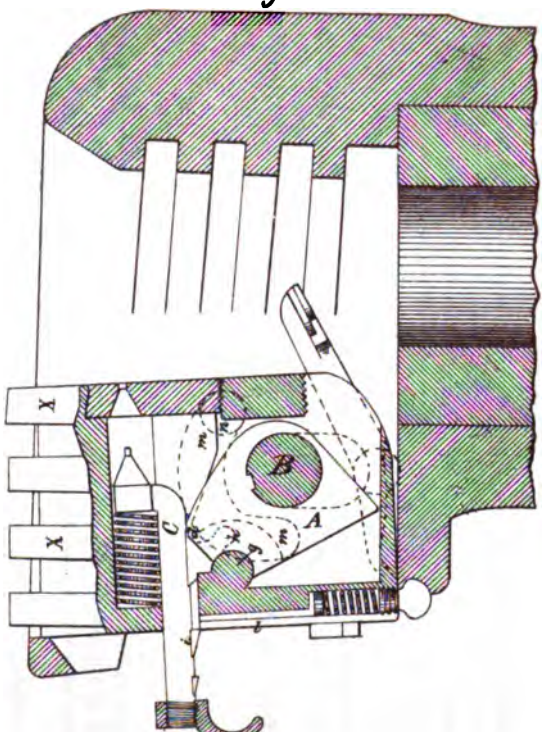

Fig. 3.

With the new powders it is expected that the initial velocity of each of these guns will reach 2,300 foot-seconds. The energies and perforations in wrought iron corresponding to this velocity are:

	Energy.	Perforation.
	Foot-tons.	*Inches.*
9-pounder	322.8	5.5
14-pounder	513.5	6.7
33-pounder	1,210	9.5

DRIGGS-SCHROEDER GUN.

The Driggs-Schroeder gun, the earliest form of which is described in No. VI., has been submitted to official trial at the Annapolis proving-grounds. Some few imperfections in the breech mechanism were discovered, but these are defects of detail, not of the system, and they have been remedied in the guns now making. On the other hand, the trial developed some marked points of superiority.

The unusual length of travel of the projectile gives the gun an increased initial velocity, and consequently greater accuracy and penetration, as compared with other guns of the same type and calibre; and, owing to the extreme lightness of the breech parts, these advantages are obtained without any corresponding increase of the weight of the gun as a whole. It is claimed, and with reason, that these advantages will appear more striking as the calibre increases.

The average initial velocity obtained on trial, using Hotchkiss cartridge and common shell, was 2,048 foot-seconds. With a crew of three men, not especially trained, six shots were fired in 15.5 seconds; and it was thought at the proving-ground that, with greater practice, they could undoubtedly have fired at the rate of 30 shots per minute. The arrangement by which the firing-pin may be set and kept at half-cock is an unusual device, and the trial proved it to be a useful and perfectly safe one.

The original breech mechanism has undergone many modifications, the nature of which will be seen by reference to the plate.

Fig. 1 represents a longitudinal section of the breech of the gun and breech-block; the breech-block cavity, cam, and firing-pin being shown in full lines, and other features in dotted lines. Fig. 3 is a vertical section along the dotted line *z z* of Fig. 1.

The operation of the parts is as follows: To open the breech, the lever on the axial bolt B is turned to the rear, thereby revolving the bolt and cam A; when the latter has turned so far as to cause its forward upper point *d* to pass from beneath the horizontal wall *a b* of the cavity, the toe of the cam will press against the lower portion E of the breech-block and force the block downwards, the point *d* meanwhile moving along the upwardly-inclined plane *bc*. During this part of the movement, the bottom of the grooved recess *e* in the cam takes against the cocking-lug *h* on the firing-pin C, and forces the latter to the rear against the pressure of a spiral spring until the full-cock stud *i* is caught by the sliding leaf *l*.

This occurs just as the cam recess *f* embraces the shoulder *g* on the block, after which any further rotation of the cam must necessarily rotate the block, and the relative motion of the cam and firing-pin will cease. The block has now descended so far that the ribs X X are free from the grooves in the wall of the breech, and the axial bolt is in the upper portion of the elongated opening D; hence onward the movement of the block is to the rear and is controlled by the cam grooves *m* and the guide-studs *n* fixed in the wall of the breech, and the motion continues until the parts assume the position shown in Fig. 2. A reverse motion of the lever brings the parts back into the firing position.

The extracting and firing apparatus are operated substantially as described in No. VI.

A consideration of the shape of the firing-pin will show that it is impossible that it should be blown out to the rear by imperfect obturation of the cartridge base, the upturned head and the cocking-lug both acting to prevent such a mishap. Also, a spring safety-catch has been introduced to prevent accidental opening of the breech by concussion arising from the discharge of adjacent guns.

A company has been incorporated and organized for the manufacture of these guns, and a 6-pounder is now in course of construction. Designs for a 5-inch gun are in preparation.

KRUPP R. F. GUNS.

Last year's record of the trial of the 84-millimetre gun has been supplemented by experiments with fixed ammunition, and naturally much better results have been obtained.

On successive occasions within the present year the gun has fired 20 rounds in 1 minute 41 seconds, 10 rounds in 34 seconds, and 7 rounds in 19 seconds. The powder charge has been increased to 3.7 pounds, and the initial velocity is now about 1,580 foot-seconds.

The subjoined table gives some details of the new Krupp R. F. guns, 35 and 40 calibres in length:

Calibre.		Length of gun.		Weight of—			Powder.	Initial velocity.	Pressure.
				Gun.	Projectile.	Charge.			
Centimetres.	*Inches.*	*Inches.*	*Calibres.*	*Pounds.*	*Pounds.*	*Pounds.*		*Foot-seconds.*	*Atmospheres.*
4	1.57	63.0	40	231	1.76	.77	G. G. P. C/86	2,145	2,080
5	1.97	78.7	40	496	3.85	1.3	G. G. P. C/86	1,991	2,125
6	2.36	94.5	40	849	6.6	2.2	G. G. P. C/86	2,030	2,035
7.5	2.95	118.1	40	1,653	15	4.4	G. G. P. C/86	1,902	2,125
10.5 ...	4.13	144.9	35	2,645	39.7	8.6	P. P. C/86	1,729	1,950
							10—15cm		
13	5.12	179.1	35	5,510	66	17.6	P. P. C/86	1,640	2,200
							10—15cm		

The initial velocities here given are the highest that have been obtained thus far. It is proposed, however, so to adjust the weights of powder charges as to give to the four smaller calibres a uniform initial velocity of 650 metres (2,132 feet), and it is believed that with the new powder, G. G. P. C/86 (grobkörniges Geschütz-pulver), this figure can be reached without giving rise to excessive pressures.

The 13-centimetre gun fires 12 rounds and the 10.5-centimetre 15 rounds per minute; the smaller calibres fire from 17 to 20 rounds per minute.

THE MAXIM R. F. GUN.

Mr. Hiram Maxim has lately completed a 47-millimetre R. F. gun, which, it was stated a month ago, is soon to be sent to France for trial.

The mechanism of this gun performs automatically all operations except that of loading. When the gun is loaded and the trigger is pulled the barrel recoils through a distance of 4 inches, the breech remaining closed. The return to the firing position operates to drop the breech-block, cock the hammer, and eject the empty cartridge-case. The insertion of the cartridge brings into action a mechanism that

closes the breech, and the gun is at once ready for firing. Once begun, the firing may be carried on indefinitely without the intervention of the pull on the trigger.

R. F. GUNS IN THE FIELD.

In a recent paper by Mr. Nordenfelt on this subject, he puts before artillery authorities the question, "Whether it is necessary to make all artillery in the field heavy and long-range, or whether it would not be wise to endeavor to find a protected, non-recoil gun for fighting at short range, leaving to the present field gun to do its part of long-range artillery duels."

To carry the short-range idea into practice Mr. Nordenfelt proposes to reduce the weight of shell sufficiently to allow the recoil to be checked by wheel-brakes and trail; to compensate for such loss of weight, and consequent loss of effect, by increased rapidity of fire; to take advantage of the saving of weight in gun and carriage by the employment of an efficient shield against infantry fire; to give the gun a traversing motion to facilitate train; to carry a much larger supply of the lighter ammunition used; to carry the fixed ammunition that goes with limber and wagon in special boxes, so that in unlimbering a large supply may in safety be left with the gun; to save by this means much labor of men and horses; to reduce the weight per horse within the limits of power of very rapid movement.

Mr. Nordenfelt has constructed three calibres of R. F. field guns, viz., 8-pounder, 6-pounder, and 3-pounder. Their principal details are—

	8-pounder.	6-pounder.	3-pounder.
Calibre ..... inches..	2.4	2.24	1.85
Weight of gun ..... cwt..	6.5	4	3.25
Carriage with shield ..... do ..	13	12	‡18.75
Limber ..... do ..	*15.25	†15.5	.....
Shell and shrapnel ..... pounds..	7.7	6	3.3
Powder charge ..... do ..	1.75	1.25	.66
Cartridge complete ..... do ..	11.5	8.75	5.2
Case shot ..... do ..	10	8	4.5
Length of gun over all ..... inches..	92	72	74
Diameter of wheels ..... do ..	60	60	60
Track ..... do ..	62	62	62
Velocity:			
Initial ..... foot-seconds..	1,650	1,510	1,510
At 1,000 yards ..... do ..	1,197	1,070	1,003
At 2,000 yards ..... do ..	965	880	844
At 3,000 yards ..... do ..	830	750	717

* With 50 rounds of ammunition. † With 80 rounds. ‡ With 96 rounds.

The 8-pounder is drawn by six horses, the draught of each being below 6 cwt.

The maximum rapidity of fire is 30 rounds per minute. The rapidity of fire of aimed shots is 15 per minute; or, as Mr. Nordenfelt puts it, the 8-pounder fires 120 pounds of shrapnel, containing 1,575 lead bullets, per minute, as against 36 pounds weight, and 531 bullets per minute from the 12-pounder field piece now in use.

The ammunition wagon carries 80, its limber 50, and the gun limber 50 rounds; 180 rounds in all.

The 6 pounder has 248 rounds per gun.

The 3-pounder is provided with 176 rounds when one two-wheeled ammunition cart is attached to two guns, or 256 rounds when each gun has its own ammunition cart.

The gun on its galloping carriage and the ammunition cart are each drawn by four horses, the draught of each horse being 5.5 cwt.

The 8- and 6-pounders are intended for the support of cavalry and infantry attacks; the 3-pounder may support cavalry attack, or may be attached to the regular 12-pounder battery for the purpose of rapid range-finding or flank protection against cavalry or infantry.

MAXIM AUTOMATIC MACHINE-GUN.

The Maxim is a single-barreled gun. The barrel is mounted partly in a rectangular steel case, and partly in a brass tube, and is so arranged that it slides freely to and fro in its supports when firing. The gun may be mounted on any of the naval or field mounts commonly in use with this type of weapon. The first round is fired by hand, and the automatic system is set in motion by the resultant recoil, as follows: The recoil opens the breech, withdraws a loaded cartridge from the belt, extracts the empty case, and cocks the hammer, at the same time stretching a spiral spring, which, when the recoil is absorbed, forces the barrel back into the firing position; the return of the moving parts expels the empty case, thrusts a loaded cartridge into the barrel, pushes a fresh cartridge in the belt into position, closes the breech, and pulls the trigger.

Guns of various calibres, from rifle-bore to 3-pounder, have been constructed on this principle or on slight modifications of it. The following is a description of the gun of rifle calibre; the letters employed therein have reference to the figures in the plate.

Fig. 1 shows the outside portion of the gun; all parts shown in full lines in this view remain stationary at the time of firing, with the exception of the crank A, C, B. The crank forms a part of the recoil system, and upon firing, the arm A comes in violent contact with the stationary arm D. The shape of A is such that the pressure against D causes the former to take up a gradually increasing arc motion through about 150°, the motion being most rapid when the toe of the arm D bears against the lower cam-shaped portion of A. The rotary motion of the shaft is arrested by the arm B striking against the spring buffer E. The spiral spring F, shown in dotted lines, is located in a box on left side of the gun-casing. The recoil extends this spring 1 inch, the amount of longitudinal travel of the shaft, and the revolution of the shaft, winding the chain G about a small fusee at its farther end, still further extends it. When the crank handle B has been brought to a stop at E, the action of the spring is to return all parts to the firing position as shown in the figure, the piece H, which brings the crank-handle to a rest, being so constructed as to prevent all rebound.

I represents the sights; K, the feed-box; L, the trigger; M, the aiming-handles.

Fig. 2 is a central longitudinal section, showing the parts in the firing position. The lock consists of the firing-pin *a*, main-spring *b*, hammer *c*, and sear *e*, all of which are mounted in the detachable bolt N N N. The operation of the lock is as follows: When the trigger L is pulled, the rod O is drawn backwards, and with it the lower end of the sear; this movement of the sear releases the hammer (see Fig. 5), when the main-spring throws the firing-pin forward, causing it to strike the primer and explode the cartridge.

The detailed action of the recoil will now best be understood by reference to the remaining figures. Fig. 3 shows the relation of the parts when the breech is closed; Fig. 4, the same at the end of the recoil: Figs. 5 and 6 are central sections corresponding to the outside views, 3 and 4; and Fig. 7 is a perspective view corresponding to Fig. 4.

As before explained, the recoil resulting from the explosion causes all movable parts to slide backwards through a space of 1 inch, and this is the limit of the recoil of the barrel. But almost at the commencement of the recoil, the shaft C and crank R begin to rotate, and all other movable parts are thus gradually drawn away from the barrel. The sliding piece T, which has an undercut groove on its forward face exactly fitting the head of a cartridge, serves the double purpose of breech closure and carrier for transferring cartridges from the belt to the gun; as it moves away from the barrel it withdraws the empty case from the bore and a loaded cartridge

Fig

Fi

from the belt, and as its rearward motion continues it finally passes beyond the guides that sustain it and drops, partly by gravity and partly by the action of a spring, into such a position as to bring the loaded cartridge into line with the barrel and the empty case in line with the discharge-tube P. The motion of the crank R also cocks the hammer by bringing the connecting-rod S in contact with the hammer extension *d*. The spring returns all parts to the firing position as shown in Fig. 3. The empty case and full cartridge are pushed into their respective places, the carrier is lifted by the arm U and bell-crank V (the bell-crank being so shaped that the lifting takes place at the last moment, and after the cartridge has been thrust home), and the movement of the connecting-rod releases the safety-sear *f*. If the trigger be held in the firing position by pressure on the lever *g*, the gun will again fire and will continue to fire as long as the pressure on *g* lasts and the ammunition is supplied to the feed-box.

A safety-catch *h* is so arranged that, when turned outwards as shown in Fig. 2, it is impossible to pull the trigger.

The cartridges, placed side by side in a belt, are fed into the gun by a bell-crank lever, one arm of which is attached to the barrel and the other to a slide provided with two downward-protruding fingers. As the barrel recoils the fingers move to the right and engage a new cartridge, and the return of the barrel moves the cartridge into a position where it can be seized by the carrier.

The gun is surrounded by a water jacket provided with a tube in which a rod Q moves freely back and forth. If the gun be fired at an elevation, the rod slides backwards, closing the water passage at the rear end of the tube and opening a passage for the escape of the steam at the highest point, thus preventing any unnecessary loss of water. If the gun be fired at a depression, the rod slides forward, and the steam passage at the rear is opened. The jacket holds sufficient water to allow of firing 1,000 rounds in rapid succession. The supply may at any time be renewed in about twenty seconds. The spring *x x* around the barrel is for the purpose of keeping the stuffing-box at each end tight.

The following is quoted from Iron, of May 25, 1888:

"The Maxim gun has been very favorably reported on by the Austrian War Office. The report states that the preliminary trials made at Vienna last year established the superiority of the Maxim system over all others as regards both rapidity of fire and ease of manipulation. The Austrian Government therefore ordered exhaustive experiments, which included tests for range and accuracy at distances of 200 metres to 1,575 metres and tests for strength and durability. The results showed that the accuracy of the Maxim gun is superior to that of both the two-barrel Gardner and the five-barrel Nordenfelt. In the tests for durability, an average rapidity of 600 rounds per minute was obtained, not only with the greatest elevation and depression, but also when traversing the gun laterally through the greatest angle that the mounting would allow. The report further states that in all 13,504 rounds were fired, and that the gun, on the whole, behaved extremely well, the loading and firing mechanism working faultlessly. It is added that if certain reserve parts are supplied and the buffer spring is made stronger the durability of the arm would be guaranteed under all circumstances. After 6,356 rounds had been fired, the gun was tried for accuracy at 600 metres range, and an excellent diagram was obtained. The report is signed by Colonel Huffzky."

These trials were made with the 11-millimetre cartridge; it is said that the Austrians will adopt a gun of 8 millimetres calibre, in order to use it with the new Männlicher small-bore ammunition.

SMALL ARMS.

The small-arm experts of Europe seem generally to have become converts to the Hebler theory of small calibre, and nearly all the leading powers are taking steps toward re-armament with pieces not exceeding 8 millimetres bore.

Austria.—The Austrian Government has definitely decided on the adoption of the Männlicher 8-millimetre, and the Diet has voted the necessary credit of fifteen and a half millions of florins for the purchase of the new weapons.

The breech mechanism is the same as that of the 11-millimetre piece. The weight of the new cartridge is 30.6 grams as against 42 grams in the old one. At 15 paces range the new steel-coated bullet has pierced a 6-millimetre steel plate and penetrated from 10 to 15 centimetres into the wood backing.

Belgium.—Belgium has recently ordered 100,000 Nagant magazine rifles; calibre, 8 millimetres.

The bore of this gun is rifled with 6 grooves of 0.15-millimetre depth. The profile of the groove is a simple arc of a circle, a form which greatly facilitates cleaning. The pitch is about 31 calibres; length of bore, 820 millimetres. The total weight of the piece is 4.02 kilograms.

Denmark.—The Danish Minister of War has asked for the funds necessary to manufacture 41,000 rifles of a new model, 8 millimetres bore, and appropriate ammunition.

The pitch of the rifling of this piece is such that the projectile makes three complete revolutions before leaving the muzzle. The cartridge, the compound bullet of which is covered with sheet copper, weighs 33 grams. The muzzle velocity is 534 metres, superior by 137 metres to that of the Remington now in use, and the new gun fires five shots in the time required to fire three from the old.

England.—The new English magazine rifle, .30 bore, is a combination of the improved Lee and the Männlicher. The length of the piece is 49.5 inches; weight, 9 pounds 3 ounces. A May number of the London *Times* says that "the issue of the new rifle for final trial has been stopped for the present, and the supply of a suitable ammunition is now engaging attention."

Germany.—The present German weapon, the 11-millimetre Mauser, is to be replaced by one of a little less than 8 millimetres. The new steel-coated bullet will perforate a 30-millimetre steel plate.

France.—Five French army corps have already been provided with the new Lebel small-bore rifle.

Russia.—Russian military authorities have decided against the magazine rifle and in favor of the Berdan single-fire. The calibre of the latter, however, is to be reduced to 8 millimetres.

The primary object in action is to disable, rather than to kill. The enemy should be encumbered, if only for a brief time, with the greatest possible number of wounded, and the rifle and cartridge that will best bring about this result are the ones best adapted to the purposes of war. The bullet that will pass through half a dozen men must disable, although it may not kill, and it is therefore better than the bullet that hits to kill—one.

The introduction of small-calibre rifles has given rise to greatly increased velocities, and consequently to greater destructive effect through penetration; but penetration depends also upon the composition of the bullet, upon its hardness; and the question has arisen—How far can the bullet be hardened so that it shall give the requisite penetration, and yet not injure the rifle-bore or lose any of its accuracy through failure to take the grooves?

The following pages, descriptive of the Lorenz ammunition and some recent small-arm experiments made in Austria, seem to furnish a satisfactory answer.

THE LORENZ AMMUNITION.

The bullet consists of an envelope or shell of one of the harder metals and a lead filling. The shell is drawn and pressed into the required shape, its inside is tinned

and filled with compressed pieces of soft lead, and the whole is then raised to a temperature sufficient to fuse the lead and effect an intimate union between it and the casing. The lead filling is afterwards subjected to pressure, after which the bullet is cut to the required length and gauged.

The shell metal from which the best results have been obtained is steel, tempered at the point, but comparatively soft along the parts that take the grooves.

The cartridge case is drawn out from a single disk of metal, and the metal is so distributed in the process as to afford the greatest strength just where it is most needed to resist the force of explosion of the charge.

The charge is of compressed powder, and is arranged in the case in varying densities so as greatly to reduce the pressure, while very considerably increasing the velocity; at the same time a uniform density of loading is secured, or, at least, the chances of lack of uniformity are reduced to a minimum.

The accuracy obtained with this charge and the steel-jacketed bullet is remarkable. In 20 targets of 30 rounds each, at a 400-metre range, the 80 per cent. rectangle measured only 2.15 by 1.60 inches.

The effects of prolonged fire upon the bore are no greater than with lead projectiles; 6,000 rounds were fired from a service rifle without in the least impairing its serviceable qualities.

The Lorenz metallic cases are not confined to rifle calibres; they have already been used in Krupp R. F. guns of 10.5- and 13-centimetre calibre, and the Revue Militaire Belge is authority for the statement that Armstrong purchases from Lorenz the cases used with his 36- and 70-pounders.

EXPERIMENTS WITH SMALL-BORE RIFLE BULLETS.

The following summary of the experiments to determine the most suitable projectile for the new small-bore rifles is condensed from the detailed report published in the Revue d'Artillerie, Vol. XXXII, part 1. The experiments were made at Bernsdorf, Lower Austria, during the months of June and September, 1887.

The firing in all cases was from either a Kropatcshek or a Nagant rifle; both are of 8-millimetre calibre.

The first named is designed expressly to fire a hardened lead bullet. A section of the bore shows four grooves of same width as the lands and of a depth of 0.2 millimetres; the bottom angles are rounded off, but those at the junctions with the lands are well defined. The pitch of the rifling is 35 calibres; length of bore 820 millimetres. The muzzle velocity is about 510 metres.

The Nagant rifle is designed to fire a nickel-jacketed bullet. A sufficent description of the gun will be found on page 366.

Three kinds of bullets were used, viz., hardened lead, lead with steel jacket, lead with nickel jacket.

Following are some details of the two steel-bullet cartridges:

	Guèdes. (Kropatschek.)	Nagant.
Length of—		
Cartridge ..... millimetres..	81	78.5
Bullet ..... do....	32	31.5
Case ..... do....	59.5	53
Weight of—		
Cartridge ..... grams..	35	29.5
Bullet ..... do....	16	15.6
Charge ..... do....	4.5	3.75
Case ..... do....	14.4	10

The June experiments comprised tests for accuracy, effect of prolonged firing on the rifling, and penetration.

Fire for accuracy.—(1) *Kropatschek rifle.*—The same rifle was used throughout the firing. At the 200-metre range a series of 30 rounds was fired with each description of bullet. The piece at the conclusion of each series was thoroughly cleaned and allowed to cool to the initial temperature. At the 400-metre range 80 rounds with each description of bullet were fired, as follows: 40 rounds were first fired for accuracy; these were followed by 20 rounds fired as rapidly as possible, when 20 additional rounds for accuracy were fired. The piece was cleaned and cooled at the conclusion of each series of 80 rounds.

The results are indicated below—

Distance of target.	Description of bullet.	Number—		Radius of the circle containing—			
		Of shots fired.	Of hits.	100 per cent. of shots fired.	90 per cent. of shots fired.	70 per cent. of shots fired.	50 per cent. of shots fired.
Met.				*Cm.*	*Cm.*	*Cm.*	*Cm.*
200	Hardened lead	30	30	48	27	18	10
	Steel jacketed	30	30	52	28	21	15
	Nickel jacketed	30	30	36	27	19	15
400	Before the rapid fire:						
	Hardened lead	40	40	84	53	37	26
	Steel jacketed	40	40	76	48	34	30
	Nickel jacketed	40	40	86	71	37	30
	After the rapid fire:						
	Hardened lead	20	15	.....	.....	187	83
	Steel jacketed	20	20	84	59	46	33
	Nickel jacketed	20	20	68	55	28	25

Attention is called to the great loss of accuracy in the case of the hardened lead bullet in the rounds succeeding the rapid fire, and also to the fact that, as the firing progressed, the accuracy of the nickel-jacketed bullet seemed to improve.

(2) *Nagant rifle.*—A series of 60 rounds with each description of bullet was fired, but the results are given only in the case of the nickel-jacketed bullet. They are as follows:

No. of shots fired 60
No. of hits 60
Radius of circle containing—
100 per cent. of shots fired ..... centimetres.. 96
90 per cent. of shots fired ..... do.... 56
70 per cent. of shots fired ..... do.... 40
50 per cent. of shots fired ..... do.... 27

Effect of prolonged fire.—Five hundred steel-jacketed bullets were fired from the Kropatschek rifle, with the result that the impressions of the bore, taken respectively after the one-hundredth and five-hundredth rounds, showed not the slightest change in the form or dimensions of the grooves.

Penetration.—The firing was from the Kropatschek rifle. The tests included the trial of a copper-jacketed projectile, in addition to those already mentioned. The range is not given; it probably did not exceed 25 metres.

Target.	Bullet.	No. of shots.	Penetration in centimetres.			Remarks.
			Beech.		*Pine.*	
1. Two 9-centimetre beech blocks backed by 2.5-centimetre pine boards 4 centimetres distant from each other.	Hardened lead..	4	9		.....	The bullets, completely deformed, made a slight indentation in the second block.
	Steel-jacketed ..	4	18		52.5	
	Nickel-jacketed	2	18		50.0	
2. Three 9-centimetre beech blocks backed by pine, as in No. 1 target.	Steel-jacketed ..	2	27		35.0 40.0	
	Nickel-jacketed	4	27		32.5 35.0 37.5	
			Steel.	*Beech.*	*Pine.*	
3. One 1.2-centimetre steel-plate backed by a No. 1 target.	Hardened lead..	3	0.12	9	.....	Bullets much deformed.
	Steel-jacketed ..	2	0.12	18	30.0 32.5	Bullets slightly deformed.
	Nickel-jacketed	2	0.12	18	20.0 22.5	Bullets slightly deformed.
	Copper-jacketed	2	0 12	9 11	.....	Bullets rent in pieces.
			Beech.	*Steel.*	*Beech.*	
4. One 9-centimetre beech block and one 2-centimetre steel plate backed by a No. 1 target.	Hardened lead..	2	9	.....	.....	Bullets arrested by steel plate; badly deformed.
	Steel-jacketed ..	2	9	0 22	8.0 5.0	Bullets slightly deformed.
	Nickel-jacketed	2	9	0.22	6.0 4.0	Bullets slightly deformed.
	Copper-jacketed	2	9	....	.....	Bullets arrested by steel plate; badly deformed.

The September experiments were made—(1) To discover whether or not a prolonged fire would cause any deformation of the rifling sufficient to diminish seriously the accuracy of the piece; (2) to study the effect of slight variations in calibre.

(1) The results of prolonged fire may be summarized in tabular form as follows:

Kropatschek 8-millimetre rifle.

[Steel-jacketed bullet. Range, 400 metres.]

	No. shots fired.	Radius of circle containing—	
		50 per cent. of shots fired.	70 per cent. of shots fired.
		Centimetres.	*Centimetres.*
After 500 rounds*.....	30	29	39
After 2,000 rounds....	30	31	38
After 3,000 rounds	30	30	37
After 4,000 rounds	30	29	39
After 5,000 rounds	30	29	39

* The rifle is the same as that used in the June experiments, in the course of which it fired 500 rounds with steel-jacketed bullet.

Nagant 8-millimetre rifle.

[Steel-jacketed bullet. Range, 400 metres.]

	No. shots fired.	Radius of circle containing—	
		50 per cent. of shots fired.	70 per cent. of shots fired.
		Centimetres.	*Centimetres.*
Before prolonged fire	30	23	31
After 2,000 rounds	30	18	27
After 3,000 rounds	30	21	28
After 4,000 rounds	30	14	24

The figures here shown point to the Nagant system of rifling as the one better adapted to the use of steel-jacketed bullets. It should be remembered, too, that the ratio of bullet to weight of charge is much less in the Nagant cartridge than in the case of its competitor, the Guèdes.

(2) With the Kropatschek rifle, the best results were obtained with pieces of from 7.90 to 8 millimetres. Any increase of diameter above 8 millimetres sensibly impairs the accuracy.

With a piece rifled on the Nagant system, a variation of calibre between the limits 7.96 and 8.20 millimetres has no appreciable effect.

CONSTRUCTION OF THE LEBEL RIFLE.*

The Revue Militaire Suisse, in its issue of the May 15, 1888, publishes a short notice by H. Failletaz, lieutenant of artillery, in relation to the new French Lebel rifle. From the description therein given, although not a complete one, it may be inferred that it belongs to the Kropatschek type (bolt gun, with cartridge carrier or trough).

The favorable results obtained with the Kropatschek by the French naval forces at Sfax and with weapons of a similar type employed in Tonquin, have had their influence in bringing about its adoption in France.

The Militär Zeitung, in its issue of the 5th of May, besides giving information relative to the ballistic properties of the new small-calibre Austrian and French guns, adds a few words upon the respective systems of construction, and *apropos* of the Lebel rifle, says:

"As to the arrangement of the feeding and locking gear of the new French rifle nothing certain is known. But from the quarrel that has arisen between the Austrian chief mechanician, Schulhof, and the French authorities, relative to the violation of the rights of the former, it may be concluded that it must contain many points in common with the design of the Austrian inventor.

"In the Schulhof gun the magazine forms part of the weapon itself, and consists of a revolving cylinder, placed in rear of the barrel and in the lower part of the breech, capable of containing ten cartridges. The gun is loaded by introducing the cartridges through a spring aperture and revolving the chambers by hand, holding the piece in any convenient position while so doing.

"The fact that the magazine is in rear of as well as below the line of the barrel gives an advantageous disposition of the centre of gravity, which is thus thrown well to the rear."

To these notes from the German journal we may add that from information ob-

* The notes on the Lebel rifle were translated from the Rivista di Artiglioria e Genio of May, 1888, by Ensign J. B. Bernadou, U. S. Navy.

tained from persons well posted it would appear that the French Government has offered to compromise with Schulhof for 100,000 francs.

As our readers will see from the two citations made, each of which is worthy of consideration, absolute knowledge is not yet to be had, although it may be assumed as quite probable that the real Lebel system corresponds to one of the two above-mentioned types.

The following is the Swiss account:

"The Lebel rifle of 1886, which is 1.24 metres in length, consists of seven principal parts, viz.: (1) The barrel; (2) the breech; (3) the breech mechanism; (4) the repeating mechanism; (5) the stock; (6) the fittings; (7) the bayonet.

"(1) *Barrel.*—The barrel is in external form a truncated cone with five faces. Its length is 745 millimetres. It carries two sight lugs, the socket for the fore sight being cut from the forward one.

"The calibre measured from the bottom of the grooves is 8 millimetres. The lands are four, with twist from right to left, pitch of 0.24 metre, and depth of .15 millimetres.

"The sight is of the movable-bar and sliding-vane type. The base is provided with five steps, against which the bar leans for distances of from 400 to 800 metres. The bar carries graduations for from 900 to 1,900 metres, and has on its top the notch for 2,000 metres, the highest contemplated range. The base of the vane leaning against the notches gives the elevation for from 400 to 800 metres, and the heel of the bar presents, when the latter is lowered, the notch for point blank available for ranges up to 350 metres.

"(2) *Breech.*—The breech, screwed to the barrel and bronzed, is rectangular in shape and much resembles that of the Swiss Vetterli, but being closed underneath, however, by a plate called the 'corps de mécanisme.' It bears also the strengthened or thickened shoulders which receive the shock of recoil, this being transmitted to them by two wings or projections on the 'tête mobile' (movable head).

"(3) *Breech mechanism.*—The breech mechanism is composed of six pieces of steel, viz.: (1) The movable head; (2) the extractor; (3) the cylinder; (4) the trigger dogs; (5) the firing-pin; (6) the handle; (7) the spiral spring.

"The movable head, the cylinder, and the trigger dogs are all arranged together so as to present a whole of an external cylindrical form.

"The movable head presents as a peculiarity two wings or projections which transmit the shock of the recoil to the two shoulders of the breech. It is provided with an extractor made in one piece.

"The cylinder is the locking piece properly so called and is in one with the bolt handle.

"The trigger dogs serve to cock the gun and to fire it.

"These three parts, containing within them the firing-pin, move along the breech in a longitudinal direction. The movable head and the cylinder take, in addition, a rotary motion, given by the bolt handle, and serving to cock the piece.

"The firing pin is of peculiar shape, consisting of two cylindrical parts attached to an oval part. This arrangement prevents any turning movement of the pin when it is drawn back from its rest in the movable head.

"In summation, the functions of the breech mechanism are the following: To close the breech, to cock the piece, to explode the cartridge, to raise and lower the carrier, to introduce the cartridge into the chamber, and to extract the shell.

"(4) *Repeating mechanism.*—The repeating mechanism is more complicated than that of the Swiss Vetterli. It consists of the plate above referred to as the 'corps de mécanisme,' upon which are grouped the five following parts: (1) The cartridge carrier or trough, (2) the arm of the same, (3) the cartridge stop, with its spring, (4) the working lever (service de manœuvre), (5) the trigger and firing gear.

"The carrier or trough serves to convey the cartridge from the magazine to the barrel, and also to close the mouth of the magazine by means of a nib projecting from the lower side of its movable end. At its rear or fixed end the carrier is connected with an

arm, or bent lever, turning on a pivot. Under the carrier is a branched spring, of which one extremity can penetrate into the mouth of the magazine and can catch under the rim of the cartridge shell, thus acting as a magazine stop.

"The working lever (service de manœuvre) with its spring—the latter only serving to facilitate its action—is connected with the carrier arm, which it is capable of lowering through a distance of from 5 to 6 millimetres. It is worked by a stop projecting from the lower part of the breech.

"The trigger and firing gear offer no novelty. There is a second notch serving for half cock.

"(5) *Stock.*—Under the barrel in the forearm of the stock is situated the magazine, feeding to the rear and capable of containing eight cartridges.

"(6) *Fittings.*—Under this head may be mentioned the ramrod, only 30 centimetres in length, screw-threaded at one end, and fitted at the other with a threaded brass socket for the use of tools.

"(7) *Bayonet.*—The bayonet is intended to be used when free in the hand as well as when attached to the gun. It has a straight blade, of grooved quadrangular section, mounted on a nickel-bronze handle. It fits over the muzzle with a swivel band, notched so as to permit its passing over the fore sight.

"The working of the gun may now be readily understood. The extraction and expulsion of the cartridge shell take place in the usual manner. In throwing back the bolt the gun is cocked and one of the projections of the movable head, striking the carrier arm, causes the carrier to rise and to present a cartridge to the chamber, and to close at the same time, by means of the nib projecting from its lower side, the mouth of the magazine. The spring catch, simultaneously, slips over the head of the next cartridge, so as to prepare it for entrance to the carrier when the latter is lowered.

"Upon closing the bolt the first cartridge enters the chamber, and the carrier is lowered to receive the second. The spring catch closes the mouth of the magazine. It only now remains to press the trigger and fire the piece.

"These functions, which are those of repetition, are effected while the carrier arm is raised, *i. e.*, while the stop of the working-lever (service de manœuvre) is pushed forward. When the stop is pushed to the rear it lowers slightly the carrier arm and renders it independent of the breech mechanism, thus preparing the piece for single fire."

THE HURST CARTRIDGE.

Mr. H. P. Hurst, of Mississippi, has recently secured patents on an accelerating cartridge, which, tried in a small-bore rifle (.32 calibre), has given some remarkable results. Remarkable results are to be expected, however, where the weight of charge is nearly double that of the projectile, and this ratio is frequently found in the cartridge under discussion.

Mr. Hurst's invention is briefly as follows: The base of the cartridge shell has attached to it a strong central tube, which contains the initial charge of powder and extends beyond it over nearly all of the cylindrical portion of the bullet. Outside of this case is disposed a second charge, composed of rings of compressed powder considerably less in diameter than the chamber of the gun. The bullets are made of steel, and are of various lengths. The firing of the central charge is effected in the usual manner, and the bullet is driven from the tube, but the very instant it is clear the flame is communicated to the second charge, and the projectile leaves the bore with a greatly accelerated velocity.

Some experiments with this ammunition have recently been made at the Washington navy-yard. The rifle used is of special construction; the barrel is about 42 inches in length, and very heavy over the powder-chamber, which is necessarily made unusually large. The bore is rifled with six grooves having a uniform twist of one turn in 6 inches. A bullet weighing 131 grains fired from this gun with a charge of 240 grains (30 grains interior and 210 exterior charge) penetrated .96 inch in a wrought-

iron plate at a range of 33 feet, and when recovered was found to be practically undeformed. At a 3-foot range, a charge of 245 grains (35 + 210) drove a 257-grain bullet through forty 1-inch pine planks arranged at intervals from each other of 1 inch.

No experiments have yet been made to determine chamber pressures and velocities.

Mr. Hurst proposes to apply his invention to guns of the R. F. type.

EXPLOSIVES.

MÉLINITE.

Mélinite is generally believed to be a mixture of fuzed picric acid, in granules, with tri-nitro-cellulose dissolved in ether.

Mr. Turpin, its inventor, is now free to offer his secret to any government that may choose to purchase it, but the French claim that their mélinite of to-day is so different from the original substance that not even the inventor would recognize it, and that they have reached such a state of proficiency in its use as to put them at least three years in advance of any possible rivalry. It is reported that the secret has been purchased by Sir William Armstrong. It is known that experiments with one form of mélinite are now progressing in England, but so far the particulars have been carefully guarded.

Precautions are taken to guard not only the secret of the manufacturing processes, but also the performances of the explosive. Notwithstanding this, it has transpired that in the *Belliqueuse* experiments the effect of the shell striking against the armored portion of the ship was practically *nil*, the points of impact being marked by only slight surface indentations. On the other hand, the shell that struck the unprotected parts are said to have created "terrible havoc." This expression, which is copied from various editorials of the French press, is a rather vague one, but, at all events, the havoc was such as to cause many French naval experts to advocate a reversion to complete armor; and it is said that the designs of several ships now building (the *Brennus* and *Dupuy de Lôme* are mentioned by name) have since been modified especially to meet the fire of high-explosive projectiles.

A recent French publication, the Manuel du Dynamiteur, by Max Dumas-Guilin, states the explosive force of mélinite to be only three times that of gunpowder; other statements represent it as from five to eleven times as powerful as gunpowder, but M. Guilin evidently has the weight of authority on his side, and is entitled to the greater credence.

It is said that the French have succeeded in firing mélinite shell from high-power guns with velocities as high as 2,000 foot-seconds. The weight of the mélinite charge in this case is not mentioned, but it is known that charges of nearly 70 pounds have been fired repeatedly from the 22-centimetre mortar with velocities of over 1,300 foot-seconds.

BELLITE, THE SWEDISH EXPLOSIVE.

Bellite was discovered by Mr. Carl Lamm, managing director of the Rötebro Explosive Manufactory, situated near Stockholm.

Engineering, in an account of some experiments made with this explosive, states that it consists of ammonium nitrate and dinitro-benzol, which, when in a melted condition (the melting point is 80° to 90° C.), are mixed with saltpetre, forming a compound of which each molecule explodes.

In its granulated state, which seems to be the one best adapted to military purposes, bellite has a specific gravity of 1.2 to 1.4, and in this state it may be fully exploded by the aid of a small quantity of fulminating mercury, even if the cover be only a thin sheet of tin; but when pressed into the form of hard cakes it requires a stronger impulse and a stronger cover, which must adhere to the cake. Heated in an open vessel, bellite loses its consistency at 90° C., but does not begin to separate be-

fore a temperature of 200° is reached; at that point evaporation begins, and increases with a higher temperature, without, however, explosion occurring.

If the heating be sudden, bellite will burn with a sooty flame something like tar; but if the source of heat be removed, it will cease burning and assume a caramel-like structure, the ingredients being the same as in the original state, with the exception of a somewhat reduced proportion of saltpetre.

The suitability of bellite for use as bursting charges has been established by a series of trials carried out by officers of the Swedish royal artillery.

Experiments have been made in exploding mines loaded with the compound under water, against a dynamometer, and the average of several such explosions gives, at a distance of 17 feet, a blow of 10.4 per cent. greater force than that of gun cotton under exactly similar circumstances, and at a distance of 12.5 the per cent. of superiority is increased to 15.2.

Various other experiments have served to prove that bellite can withstand blows, fire, friction, and vibration without the slightest risk of explosion, and that it can be stored without the slightest danger of spontaneous combustion.

ROBURITE.

This new German invention belongs to what is known as the Sprengel class of explosives, that is, it is an explosive mixture of two substances neither of which by itself possesses explosive properties.

In the case of roburite both compounds are solids, and the resulting mixture has a sandy granular appearance somewhat resembling the commonest yellow sugar.

The inventor, Dr. Carl Roth, claims for roburite the following advantages: (1) That the two components are perfectly harmless and inert separately; (2) that even when mixed or ground together in an ordinary coffee, cement, or flour mill, the mixture can not be exploded by friction, percussion, or the application of flame; (3) that when detonated roburite produces neither spark nor flame; (4) that it produces very little noxious gas; (5) that it is not subject to deterioration through climatic variations of temperature; it should be kept dry, but if it become damp its strength can be safely restored by the application of heat.

According to Engineering the safety claims are fully sustained by the results of a series of tests conducted at Chatham, England, under the superintendence of Major Sale, R. E.

Experiment has proved roburite to be much stronger than any picric powder and in some respects more powerful than dynamite, and this fact, together with its perfect safety, seems eminently to fit it for use as a bursting charge for shells. The subjoined requirement of claim (5) would seem to imply that it is not so well adapted to submarine mining, and none of the reports at hand gives any data concerning the action of roburite under water.

A roburite factory has been founded in Germany under sanction of the Government, but whether the product is to be employed solely for industrial or partly for military purposes, does not appear. The establishment has a capacity of about two tons per day.

GRAYDONITE.

Mr. J. W. Graydon has recently discovered a new explosive for which he claims the following advantages: Absolutely no danger in handling or transportation; simplicity of manipulation; a destructive power 400 to 700 per cent. greater than that of No. 1 dynamite. A circular advertisement contains very favorable reports of a trial of the explosive made at Table Rock quarry, on the Potomac, in May, 1887. Mr. Graydon states that the explosive is adapted to military and naval uses.

CARBO-DYNAMITE.

Messrs. W. D. Borland and W. F. Reid, of England, have lately patented a new explosive, of which the base is nitro-glycerine and the absorbent is carbon. The inventors have given their preparation the name of carbo-dynamite.

Carbo-dynamite is said to be as cheap as the ordinary dynamite and to possess two important advantages over it: (1) It has a much greater explosive force—90 per cent. of the preparation is pure nitro-glycerine, and the absorbent itself is highly combustible; (2) no exudation of nitro-glycerine from the absorbent takes place when the dynamite is wet.

It is stated that some carbo-dynamite that had been in water eight months presented the same appearance at the end of that period as when first immersed, and its explosive qualities remained unaltered.

SMOKELESS POWDERS.

Both in Germany and in France extensive experiments have been carried out with the object of producing an improved powder, which shall be comparatively smokeless and non-corrosive, and, at the same time, give higher initial velocity without corresponding increase of pressure.

In Germany gun-cotton and nitro-lignin have chiefly been experimented with, while in France much attention has been bestowed upon picric powders.

The French Brugère powder is composed of ammonium picrate and potassium nitrate. It is said to give high velocities (over 2,000 foot-seconds with small arms) and to cause only very slight recoil. Large numbers of cartridges of this powder were ordered for the new Lebel rifles, but it is stated that a recent examination of a quantity of this ammunition that had been stored at Chalons showed that the powder had deteriorated—rotted—to such an extent that the whole lot had to be condemned.

France is now experimenting with gun-cotton powders, and has already obtained some marvelous results; some reports say velocities as high as 2,500 foot-seconds have been reached. The powder is practically smokeless.

The powder with which 2,380 foot-seconds was obtained from the Armstrong 36-pounder R. F. gun is a German invention. Although not smokeless, the smoke is much less in volume than that from ordinary powder and is speedily dissipated.

The same German experts have perfected a powder for small arms which is said to be absolutely smokeless. This has been adopted as the service powder of the German army.

Trials have been had in England with a small-arm powder known as the Johnson-Barland, or J-B, powder. An account of these is given in the London Times. The small-arm trials resulted in an increase in the initial velocity of about 15 per cent. over that obtained with powder of Government manufacture, and this, too, with a charge of 25 grains less weight. The inventors claimed, also, less recoil and less fouling. In August last the J-B powder was again put in competition with the Government product, the firing of one being executed from the right barrel of a Gardner rifle-calibre machine-gun, that of the other from the left barrel. Forty rounds were fired for fouling, followed by ten rounds for accuracy. The advantage in both cases lay decidedly with the Johnson-Barland powder. The difference in the amount of smoke from the Government powder and that from its rival is compared to the difference between the smoke from a pistol and that from a pipe.

The right to the German invention mentioned above has been secured by the Chilworth Gunpowder Company, in England, and the company announces itself as already prepared to turn out both rapid-fire gun and small-arm powders in quantities as large as are likely to be required by the Government service.

Paleina.—Under the name of Paleina, the Rivista di Artiglieria e Genio describes a straw powder invented by a French officer, which is stated to be suitable to both military and mining operations, to be smokeless, and to possess remarkable explosive force.

The mode of manufacture is as follows: The straw is first subjected to a process which makes the fibre soft and pliant, and is then washed and triturated in an apparatus similar to that employed in reducing rags to pulp. From these operations the fibre issues in the form of thin sheets, which are cut up and steeped first in a mixture

of nitric and sulphuric acids, and then, after careful washing to remove the excess of acid, in a solution of saltpetre and dextrine containing pulverized hardwood charcoal; the final product is dried in a current of air.

Paleina, as thus prepared, has the appearance of small discs of card-board. In the open air it burns slowly and with a blue flame, but when detonated in a confined space it explodes with a force about three times that of gunpowder. It makes no smoke and leaves no residue.

The straw has the property of absorbing nitro-glycerine in a considerable proportion, and then forms an explosive superior to dynamite in power, and relatively safe and easy to handle.

HIGH-EXPLOSIVE PROJECTILES.

Experiments with the Zalinski high-explosive projectiles are described on p. 348.

GRAYDON'S DYNAMITE SHELL.

The experimental firing with shell charged with dynamite by Graydon's method, which was begun on July 6, 1887, and was suspended the same day on account of the bursting of the gun used (a 100-pounder Parrott), was resumed at Sandy Hook on December 1, in the presence of the Ordnance Board, U. S. A.

The gun used on this occasion is a 7-inch Ames wrought-iron M. L. R. The projectiles were steel shell of service pattern, but provided with a large base opening for convenience of loading; the weight of each, including the bursting charge of 2.3 pounds of dynamite No. 2, was about 122 pounds. The weight of powder charge was 23 pounds.

The Graydon method of charging shell consists in subdividing the bursting charge into small pellets, each inclosed in a separate envelope, which is treated with paraffine. The interior of the shell is carefully lined with asbestos. The fuse is composed of a funnel-shaped vessel of sheet metal having its large end in contact with, or close to, the front wall of the projectile, while its rear end sets over the fuse proper, a cylindrical tube filled with powder and armed in front with a percussion-cap. The tube is held in position in the funnel by means of a coiled spring, the ends of which are respectively secured to the tube and the front wall of the shell. Normally the cap is at some distance from the metal of the shell, but on impact it overcomes the resistance of the spring, flies forward and explodes the charge.

Mr. Graydon makes the following claims:

I. That the action of his fuze is such that the shell will penetrate an iron-plate target before the explosion of the compound takes place, and consequently the full disruptive effect of the explosion will be realized.

II. Shell charged with dynamite, in accordance with his method, can be fired from any service gun with the ordinary service charge of powder for such gun.

III. That shell so charged are safe to handle, to store, and to fire.

IV. That a special shell is not necessary, but that any shell can be used to the inside of which access can be had.

V. That the shell will not break up except on impact, and then only when provided with a fuze, and consequently the full range of the gun can be obtained without danger of explosion.

VI. That the compound will not explode on concussion or on being fired into with small-arm projectiles.

The target was a section of wrought-iron turret 14 inches in thickness and made up of two 7-inch plates; each of these was divided horizontally into two sections so disposed as to break joints, the joint in the front plate being about one-third the distance up from the base. The whole was roofed with an iron plate, 3 inches thick and weighing from 12 to 15 tons, which projected 1 foot beyond the face of the turret and was secured to the latter by several 1¾-inch wrought-iron bolts.

This section had been used as a great-gun target before; shot-marks were visible on its surface, and there were several noticeable cracks. On the present occasion the target was set up on a wooden platform at a distance of 101 yards from the firing-point; it was without backing, and was not in any way supported or braced.

Seven shells were fired.

First round.—No fuze used. The projectile struck the upper left-hand section of the target 2 feet above the horizontal joint and 2¾ feet to the left of the embrasure, and exploded with great violence. An indentation from 2 to 3 inches in depth was made, but its appearance was such as to indicate that the shell had not struck point on. The cover was lifted from the turret and toppled over backwards. Seven bolts holding the roof down were broken. A small crack several inches in length, and leading toward the horizontal joint, was made in the front plate, and an old crack in the rear plate was considerably increased in length.

Second round.—The shell, provided with fuze, struck the target in an old indentation partially overlapping that made by the first shot, and exploded. It increased the depth of the old indentation about 2 inches, and continued the crack made by the first shot downward to the horizontal joint and upward to a bolt hole near the top. It also made two horizontal cracks leading toward the embrasure, each several inches in length. One of these terminated in a bolt-hole through which extended a vertical crack made during previous experiments.

Third round.—Fuzed. Shell struck in an old indentation 3 inches deep 1 foot below the horizontal joint and about 3 feet from the left edge of the target, and exploded. Penetration of the front plate was completed, and the plate in rear was considerably bulged and cracked. A crack in the front plate, which led from an old shot-mark up to the horizontal joint, was extended in the opposite direction to the bottom of the target, and the piece, thus separated, about 3 feet square and weighing about 2,700 pounds, was thrown directly to left of the target through a distance of 18 feet.

This completed the record for the day.

The temperature was 16° Fahr.

The remaining rounds were fired on the afternoon of the following day, December 2. The shells were all fuzed. The temperature was 36° Fahr.

Fourth round.—Fired at a wooden target 1 mile distant. Shell burst prematurely in the air at from 300 to 400 yards in front of the gun.

Fifth round.—Fired at same target. Shell burst at or beyond the target.

Sixth round.—Fired seaward at an elevation of 8° 30′. The flight was very irregular, owing, probably, to the failure of the shell to take the grooves. The shell did not burst on striking the water.

Seventh round.—Fired seaward at an elevation of 13° 30′. The shell burst prematurely in the air about 1,000 yards from the gun.

After the firing Mr. Graydon placed a tin can containing 1.5 pounds of his compound about 100 feet distant, and commenced firing at it with a Springfield rifle. The distance was afterwards decreased to about 50 feet. The can finally exploded. Mr. Graydon stated that the can showed evidence of having been hit twice before the final shot caused the explosion.

In regard to the claims made by Mr. Graydon, it may be stated that IV. is of no importance, since no ordinary shell affords such access to its interior as to admit of his method of charging.

As the first shell exploded without fuze, and the fourth and sixth burst prematurely in the air, claim V. is not substantiated.

The same is true with regard to claim VI., since the compound exploded on being hit with a rifle-bullet.

On the other hand, shells charged with dynamite by Mr. Graydon were successfully fired from the gun and serious damage was inflicted on the target; especially was this the case in the third round, when penetration and disruptive effect on the target were combined.

SMOLIANINOFF SHELL.

In November last, at Sandy Hook, in the presence of the Army Ordnance Board, three rounds were fired with shell charged with high explosive according to the method of S. D. Smolianinoff, of San Francisco.

The firing was from a 100-pounder Parrott. The weight of empty shell in the first two rounds was 89 pounds, and the weight of explosive was 4.6 pounds; in the last round the shell weighed 82 pounds, the explosive 4.1 pounds.

Mr. Smolianinoff's explosive consists of 80 per cent. of nitro-glycerine combined with a certain fluid, the composition of which is a secret. It is claimed for it that it is insensible to shock either in the gun or against a target of earth or stone, and that a detonating fuze is required to explode it.

Except that the turret section had no roof, the target was in all respects similar to that used in the Graydon experiments, even in the respect that it had been fired at before and showed the indentations of former shots. It was mounted in the same manner, and the range also was the same, 101 yards.

The powder charge decided on was 18 pounds Dupont powder. Previous trials had shown that this charge with an 87-pound projectile gave a velocity of 1,494 foot-seconds and a pressure of 26,700 pounds per square inch.

First round.—Shell (not fuzed) struck the target in the left-hand lower corner 12 inches below the horizontal joint and within the edge of an old indentation, and broke into minute fragments. A low order of explosion resulted, as evidenced by the black smoke and the character of the sound. The front plate was cracked to the joint, otherwise the damage was all on the surface. Several bolts that had been broken in previous firings were jarred out by the shock.

Second round.—Shell fitted with percussion detonating fuze. Struck slightly above and 6 inches to the left of the first shot and broke up. Explosion, although not of the first, was of much higher, order than in the previous round. A 2⅝-inch bolt was broken in two and some slight surface damage was done. The wooden foundation of the turret was badly broken up.

Third round.—Shell (fuzed) struck a few inches above No. 2 shot and broke up. Explosion of lower order than in No. 2 round and higher than in No. 1. No material damage done to the target.

The weakness of the cast-iron shell used in these rounds, and also the shape of the head, which was adapted to a nose-fuze, precluded any possibility of penetration, without which no really useful result could be looked for.

The firing was successful in the respect that no damage was done to the gun.

SHELL CHARGED WITH SNYDER'S EXPLOSIVE.

The method of Mr. F. H. A. Snyder, of New York, of throwing a high explosive from ordinary guns was recently tested in Turkey, under direction of the Turkish war department, it is said, with very successful results.

Mr. Snyder's explosive, as described in the Illustrated London News and other journals, consists of 94 per cent. nitro-glycerine, and 6 per cent. of a compound of collodion, gun-cotton, camphor, and ether; it is exploded by mere percussion against any hard and solid body, and it seems to be wholly within the power of the manipulator to prevent premature explosions.

The gun employed on the occasion referred to is a 6-inch rifled field piece. The target, erected at a distance of 220 yards, was composed of twelve 1-inch steel plates welded together and backed by 12 by 14 inch oak beams; it measured 14.5 by 4.5 feet, and weighed altogether over 20 tons. The charge of explosive was 10 pounds.

All reports agree in stating that the target was completely destroyed by a single shot, and that in all ten shots were fired without accident of any kind and without damage to the gun.

GUN-COTTON SHELL.

The following notice of the use of gun-cotton shell in Germany is condensed from an article in the Revue d'Artillerie of March, 1887. The original matter is to be found in two papers published, respectively, in 1883 and 1886, by Mr. von Förster, director of the Walsrode gun-cotton factory, Hanover.

In 1883, Messrs. von Förster and Wolff took out two patents, one for a process of preserving gun-cotton, the other for the construction of a shell to be charged with that explosive. The preservation process devised by Mr. von Förster consists in steeping the gun-cotton, in either the wet or dry state, in ether for fifteen to twenty seconds, by which means there is formed on the surface of the cotton a hard, very thin, yellowish-brown film, which is practically impervious to water. Instead of ether, nitro-benzol or any other solvent of gun-cotton may be employed.

The film in no way lessens the explosive properties of the cotton, while it prevents decomposition and loss of consistency, maintains the degree of humidity required, and stops the entrance of the paraffine. It is not claimed that the pellicle is absolutely impermeable, but that the loss of humidity is inconsiderable under favorable conditions of storage.

It does not appear that the shell invented in 1883, which was of special construction, was ever subjected to trial, and in 1885 a patent was secured for a new process of loading, which could be applied to shell of service pattern.

The wet gun-cotton used in this is in the form of prismatic grains made by cutting up the ordinary compressed discs, and to the charge of wet are added about 200 grams of dry cotton. Space being reserved for the fuse and detonator, melted paraffine is poured over the charge, filling in all its interstices, and, as it cools, forms the charge into a solid mass.

The fuze is similar to the German service percussion fuse, model 1873. The cup part, which is open at the base, is lengthened and incloses a capsule containing one gram of fulminate surrounded by an india tube and washer, the whole being held in place by a small screw. To insure the action of the fulminate on the charge the former is surrounded by 10 grams of dry cotton, protected from shock by india-rubber rings. The shell are kept in store filled, but not fuzed.

The results of the trial with the capsule in the position described were not satisfactory, and the inventor set about discovering a better one, and apparently with success. The particulars of the change are not given.

Over 200 shell, completely fitted, have been fired from the 8.8-centimetre gun without accident and with complete explosion. Charges of 16 kilograms have been successfully fired from the 15-centimetre gun, and the experiments have since extended to the 28-centimetre mortar. The bursting charge of the 28-centimetre shell, it is stated, appears to be about 50 kilograms.

A recent number of the Deutsche Heeres-Zeitung contains an account of an experiment made in March last, with a new fuze submitted by Mr. von Förster, but gives no details of the fuze itself.

The firing was from a 21-centimetre Krupp gun, with a 98-kilogram projectile and 22 kilograms charge of powder. The shell was charged with 1 kilogram of gun-cotton, and fitted with the new fuze. The initial velocity was about 430 metres. The target was a compound 12-centimetre plate, measuring 1.7 by 2.7 metres, and backed by 60 centimetres of oak. Four metres in rear of the target was a palisade of pine stocks supporting an earthen wall 3 metres thick.

The shell perforated the plate, backing, and palisade, and burst only after entering the wall of earth.

C. E. VREELAND,
Lieut. U. S. Navy.

ARMOR AND ARMOR-PIERCING PROJECTILES.

The Portsmouth competitive armor trials, compound versus all steel, are now in full progress. The programme, which is under the conduct of the British Admiralty, is an extensive one. Nine leading English firms are competing, and there have been entered, in all, eleven plates. These will be subjected to trial in the following order:

1. Cammell & Co., "Wilson" compound.
2. Brown & Co., "Ellis" compound.
3. Cammell & Co., Sheffield, solid steel.
4. Brown & Co., Sheffield, solid steel.
5. Spencer, Newcastle, cast-steel, unwrought.
6. Vickers, Sheffield, solid pressed-steel.
7. Firth, Sheffield, rolled steel.
8. Jessop, Sheffield, cast-steel, compound.
9. Beardmore, Glasgow, solid steel.
10. Armstrong, Newcastle, steel.
11. Whitworth, Manchester, steel.

The competition, it will be seen, is of a purely national character, a fact that will detract greatly from the importance of its results. The Cammell and the Brown compound plates may be said to represent the perfection of the present processes of manufacture of this type of armor, and it may be said with equal truth that a like perfection in the all-steel process is to be found only in the Creusot product, which, owing to an unfortunate want of agreement between the Admiralty and the Messrs. Schneider, is not in the contest. So while the outcome of the trials will be looked for with unusual interest, a victory for the compound plate will not, under the circumstances, necessarily be decisive in its favor.

The struggle between armor and projectile still continues; and a consideration of the trials of the past year must show that the attack has greatly improved its position.

When it is remembered that two years ago the manufacture of steel armor-piercing projectiles was said to be in its infancy, some of the results recently attained in England seem almost marvelous. For example, the Holtzer 12-inch projectile has perforated a target faced with a 16-inch compound plate of admittedly best quality, and when recovered was found to be, in the words of the report, so little deformed that it could have been used again.

It is worthy of note that, with the improvement of the steel projectile, the steel face of compound armor has been gradually hardened until it now contains a full 1.00 of carbon, or 40 per cent. more than formerly, and, also, that some all-steel manufacturers are experimenting with plates having an especially hard face plate, 1½ or 2 inches in thickness, secured to the main body by bolts.

TRIAL OF HOLTZER PROJECTILES.

The excellent results obtained with the Holtzer projectiles in the trial of March 26, 1887, it was claimed were due to the inferior quality of the plate, and a new trial was called for against a target of more modern construction. This trial took place on the 20th of October last.

The target selected was faced with a 16-inch compound plate made by Sir John Brown & Co., and was avowedly one of the best they could manufacture. It was, in fact, the second half of the plate that had so successfully withstood the attacks of the Firminy projectiles in the early part of the year.

The weight of the projectile was 714 pounds; weight of charge, 295 pounds. The velocity on impact is not stated; the muzzle energy would be about 17,720 foot-tons.

The plate was broken into two parts, and cracks were developed all over its surface. The shot, after passing through the plate, perforated the 10 feet of solid backing, and was finally arrested by an old armor-plate to the rear. When removed it was found to be intact, and so little deformed that, apparently, it could have been fired again.

A similar projectile was fired against a Cammell plate, set at an angle of 45°. The striking velocity was 1,880 foot-seconds, corresponding energy 17,500 foot-tons. The head and part of the body were embedded to a depth of 7 or 8 inches, when the projectile broke up, the rear part falling in several pieces.

A Palliser shot fired under the same conditions was shattered into small fragments after making an indentation about 2 inches in depth.

At Shoeburyness, March 15, two out of a lot of 300 Holtzer 6-inch shell were fired against a Brown 9-inch compound plate. The first shell perforated the plate without further injury than a slight cracking in the head. The second failed to get through; the head lodged in the plate, and the body, breaking off at the front band, rebounded to a distance of about 12 yards. It is understood that the lot was rejected.

The requirements are that the test shell shall pass through a 9-inch compound plate practically undeformed.

The first lot offered by Holtzer fulfilled the above requirements and was passed into the service.

On March 24, 1888, at the Bouchet powder works, near Paris, two rounds with Holtzer steel projectiles were fired against a Creusot plate.

The firing was from a 155-millimetre (6.1-inch) army gun at a range of about 87 yards. Weight of powder charge, 19.8 pounds; projectile, 95 pounds; striking velocity, 1,458 foot-seconds; energy, 1,400 foot-tons.

The plate measured 9.8 feet by 3.3 feet by 5.5 inches, and was secured to its wood backing by twenty 1.4-inch bolts.

Both shots were fired against the right-hand third of the target and both completely perforated the plate. The first shot caused three long but unimportant cracks. The projectile dropped about 6 feet in rear of the target; it was found to be undeformed, except a slight upsetting. The second shot struck about 2.5 calibres to the left and above the first: it considerably enlarged the cracks made in the first round, and caused a new one, connecting the two shot-holes and extending beyond the second one to the upper edge of the plate. The projectile was recovered about 5 feet in rear of the target; it was upset about 0.1 inch.

The bolts all held.

A comparison of the trial just described with that of the Valkyrien's plate, given on page 384, illustrates the difference in the work done on a plate by steel and chilled cast-iron projectiles. The plates are made by the same firm, are of the same thickness, and the surface areas are nearly equal; the projectiles have about the same cross-section, and their energies do not differ greatly.

But the reports, and more especially the photographs, show that in one case the plate was practically uninjured, while in the other it was twice perforated and badly cracked.

HADFIELD PROJECTILES.

Satisfactory results have been obtained with projectiles made by Messrs. Hadfield & Sons, of Sheffield.

The first trial was with a 6-inch shot, weighing 100 pounds, against a Cammell plate 4 feet square and 9 inches thick, backed by 12 feet of oak. The face of the plate to

the depth of 3 inches was of hard steel, containing 1.25 per cent. of carbon. The striking energy was 2,462 foot-tons.

The projectile perforated the plate and passed about 5 feet into the wood backing. It was found to have broken up into three main pieces. The point was uninjured, but was separated from the head, the metal showing a fine grain and close texture. The face of the plate around the shot-hole was split off to a depth of over 2 inches, and a series of nine cracks extended radially from the opening over the surface of the plate. A portion of the face was separated from the back through the weld, but was not detached, and the wrought iron was considerably bulged and fractured.

A test round was afterward fired with a 12-inch Hadfield projectile against a 16-inch Brown plate. The shot perforated the plate and buried itself in the wood backing.

FIRMINY AND ST. CHAMOND PROJECTILES.

Two interesting rounds were executed at Shoeburyness in the early part of this year with steel shell against compound armor.

The firing was from a 13.5-inch of 69 tons; the range was about 250 feet; weight of charge, 630 pounds. This charge, with a projectile of service weight, viz., 1,250 pounds, will give a striking velocity of nearly 2,000 foot-seconds and a total energy of about 35,000 foot-tons.

The first round was with a Firminy shell against a Cammell plate measuring 6 feet square by 18 inches and backed by 6 inches of wrought iron and 12 feet of oak timber. The second was with a St. Chamond projectile against a Brown plate of same dimensions and backing as the preceding, but it had been fired at before and was split into two nearly equal parts. The shot was fired against the larger piece.

The projectile was broken up in both cases, the Firminy completely so.

A lot of 300 6-inch shell, made by Firth on Firminy's patent, was tried at Shoeburyness, March 15. The firing was against a Brown 9-inch compound plate.

The first shell passed entirely through; it was slightly cracked and deformed, and a small piece flaked off the head about half an hour after the firing. The second shell also passed through the plate; it was uncracked, but was upset sufficiently to increase the diameter about 0.1 inch just below the front band.

The lot was accepted without firing the third projectile.

On March 29, two 8-inch Firminy shell, selected from a lot of 300, were fired against a Brown 12-inch compound plate.

Both shell perforated the plate without breaking; one came through without material change of form, the other was upset about 0.8 inch at the front band.

The lot was accepted.

An armor piercing trial with the St. Chamond projectile took place in July last in Russia.

The gun used is the Abonkoff 12-inch B. L. R. of 35 calibres length. The projectile, of forged steel, weighed 714.5 pounds; weight of charge, 220.5 pounds. The range was 350 feet.

The plate was manufactured after Wilson's method, at Kolpino, in Russia.

The shot struck normally with a velocity of 1,700 foot-seconds, which implies a striking energy of 14,320 foot-tons and a perforation in unbacked wrought iron of 20.2 inches. The plate was fractured, but the shot did not get through; the point barely pierced the plate, leaving the base projecting from the other side, and the surface of the projectile was badly cracked in all directions.

KRUPP PROJECTILES.

On March 3, 1888, at Meppen, a trial was made of Krupp steel projectiles against a Cammell compound plate.

The firing was from a Krupp 21-centimetre (8.27-inch) gun of 35 calibres length, at a range of about 125 yards. Weight of charge, 103.6 pounds P. P. C/82; weight of projectile, 304 pounds; velocity on impact, 1,806 foot-seconds; energy, 6,875 foot-tons.

The plate measured 11 feet by 9 feet by 15.5 inches, and was backed by 8.25 inches of oak and two .4-inch skin plates.

Two rounds were fired; both shots effected complete perforation and were recovered respectively at 43 and 733 yards in rear of the target. The plate was badly cracked and shattered; the skin plates were much bulged, and some bolts were broken. The projectiles were slightly upset, but otherwise were uninjured.

LOW'S PROJECTILES.

A trial has recently taken place of a forged steel projectile made in the Royal Laboratory, England, on a patent of Mr. R. Low, the manager. From Engineer we learn that the two projectiles fiied were of 4-inch calibre and 25 pounds weight. The powder charge was 12 pounds; initial velocity, nearly 1,900 foot-seconds; energy, about 600 foot-tons. Each of the projectiles in turn perforated a 5-inch steel-faced plate and 12 inches of wood backing, and penetrated some distance into the wrought-iron backing. The projectiles were slightly upset, but the points were perfect.

The process of manufacture is as follows: The projectile is forged and turned, brought to a red heat, and placed point down in a metal mold, into which it is then pressed by gradually increasing hydraulic power. The fracture of projectiles thus made shows the hardening effect to extend to the centre of the head.

Mr. Low argues that his process commences on the shell the same action that is more violently continued on impact; that is, the shell, when hot, is subjected to a statical pressure resembling the dynamical forces acting on it after its head enters the shield.

PORTSMOUTH ARMOR TRIALS.

The object and some of the preliminary details of these trials are stated on page 380.

The plates to be tested are all of uniform dimension, viz., 8 feet by 6 feet by 10.5 inches, and each is bolted to a solid-oak backing. The firing is from a 6-inch B. L. R., at a range of about 30 feet. The weight of projectile is 100 pounds; powder charge, 48 pounds; striking velocity, 1,975 foot-seconds. This projectile and velocity give a total striking energy of 2,708 foot-tons; the energy per inch of circumference is 143.6 foot-tons. Five shots are fired at each plate; the first two are Holtzer forged steel, the third and fourth are Palliser chilled cast iron, and the fifth is another Holtzer.

The trials are not public, only the Admiralty officials and the manufacturer of the plate to be tested are allowed to be present, and the information furnished to the press is meagre. The notes following are gathered chiefly from English scientific and service journals, and embody only such details as all accounts agree upon.

Cammell compound plate (Wilson's patent).—The first two shots penetrated to an estimated depth of 5 inches and broke up, the pieces being jarred out by the shock of subsequent impacts; the Palliser shot indented the surface of the plate to a depth of about 2 inches and broke up; the fifth shot penetrated about 5 inches, and fell back on deck much deformed. The surface of the plate showed only a few fine cracks.

Brown compound plate (Ellis' patent).—Each of the three Holtzer projectiles perforated the plate; the Palliser shot did no material damage. The surface of the plate showed only a few unimportant cracks.

Cammell solid steel plate.—The Holtzer projectile penetrated to some depth (not given in inches, but stated to be much greater than in the case of the compound plate submitted by the same firm) and remained sticking in the plate. The Palliser shot did no material damage. The surface showed no cracks.

Brown solid steel plate.—The first shot perforated the plate and buried itself about 2 feet in the backing. The details of the second shot are not intelligible. The Palliser shot broke up completely. The fifth shot was fired at an angle with the normal and of course effected comparatively slight damage.

TRIAL OF LE CREUSOT PLATES.

Magenta's belt plate.—The firing took place at Gavre in November, 1887.

Dimensions of plate, 15.3 by 7.6 feet; thickness at top, 12.6 inches; at bottom, 7.0 inches; weight, 20.2 tons. Gun, 19 centimetres; weight of chilled cast-iron projectile, 165.3 pounds.

Three shots were fired; they were directed upon the apices of a centrally located equilateral triangle, whose sides measured 2.5 calibres, one of the sides being parallel to the base of the plate.

First shot.—Powder charge, 55 pounds; striking velocity, 1,592 foot-seconds; energy, 2,908 foot-tons; thickness of plate at point of impact, 9.1 inches.

Second shot.—Charge, 53.1 pounds; striking velocity, 1,561 foot-seconds; energy, 2,795 foot-tons; thickness of plate at point of impact, 8.8 inches.

Third shot.—Charge, 60.2 pounds; striking velocity, 1,680 foot-seconds; energy, 3,238 foot-tons; thickness of plate at point of impact, 9.9 inches.

Results.—Apparently the plate could have withstood much more battering before going to pieces. Although badly cracked, no portion was broken off or detached, and bolts and backing were intact. The principal cracks radiated from the point of impact of No. 1 shot, and were caused or made apparent by the second round. The third shot seemed to have no effect other than that of penetration.

Valkyrien's hatch plate.—The plate was of irregular shape and measured about 4 feet by 6 feet (average width) by 5.5 inches; total weight, about 2.5 tons. Gun, 15-centimetre breech-loading rifle of 36 calibres length; weight of chilled cast-iron projectile, 84 pounds; powder charge, 30.4 pounds.

Three rounds were fired with velocities of 1,410, 1,393, and 1,496 foot-seconds, respectively. The energies corresponding to these volocities are 1,158, 1,130 and 1,304 foot-tons. None of the projectiles got through; the first two bounded back from the target in pieces; the third stuck in the plate. The plate held together perfectly, and its surface showed only a few hair cracks.

Revolving-cannon shield.—On June 18, at the Creusot polygon, a highly satisfactory test was made of a thin steel plate, tempered after a newly-patented process, the patent being the property of the Messrs. Schneider.

The plate measured about 3.25 feet by 2.75 feet by 0.59 inch, and was unbacked.

There were fired against it thirteen 37-millimetre steel shell from a Hotchkiss revolving cannon, the striking velocity varying from 1,066 to 1,105 foot-seconds. Not a single shell got through. Photographs of the plate, taken after the firing, show that in most cases the projectiles broke up and that they caused not a single crack.

The French firing tables represent the perforation of the 37-millimetre shell, at point blank range, as 28 millimetres (1.1 inches) in mild steel and 17 millimetres (0.67 inch) in hard steel.

LE CREUSOT TEMPERING.

The specification forming part of the Messrs. Schneider's letters patent states that the invention is based upon the utilization in the hardening process of the absorption of heat caused by the fuzing or melting of a solid substance, and of the fact that so long as a solid is melting or dissolving in a liquid substance the latter can not get appreciably hotter, except locally around the heating surface, the extent of this abnormal heating being dependent on the conductivity of the liquid material and heating-surface and the difference between the temperature of the heating-surface and that of the liquid at its fuzing point.

The hardening media preferably employed according to the invention are—

First. A saline bath mixed with ice or a refrigerating mixture.

Second. A water bath, preferably saline, mixed with ice or a refrigerating mixture. In both cases the ice can be introduced into the hardening bath, or constituted and reconstituted in the bath by means of refrigerating machinery.

Third. A bath of nitrate of soda, a salt containing sufficient water to freeze at the desired temperature. This medium is more especially suitable for soft-hardening at high temperatures. Its action is regulated by adding or withdrawing water, or by adding, during the course of the operation, hydrated or anhydrous salt.

Fourth. A solid and fuzible medium in contact with the piece to be hardened, pressure being used, if necessary, to insure the contact. This medium may be ice, solid nitrate of soda, or a metal or alloy having a low melting-point—lead, for instance.

The body to be hardened is plunged at the requisite temperature into the bath containing the solid-melting body, or is kept under pressure in and under the preferably pulverulent or granular solid material of low melting-point until the required extraction of heat has taken place, more solid material being added in the meantime, if necessary, as that originally present melts or dissolves.

LEAD-TEMPERING ARMOR-PLATES, PROJECTILES, ETC.

The following, taken from The Engineer, is an abbreviated translation of a paper in Le Génie Civil, contributed by E. Lisbonne, late Director of Naval Construction:

Holtzer chrome steel shells have shown the superiority of projectiles over plates and have made it appear as if the victory in the struggle between gun and armor would remain with the gun, owing to the high quality of the projectile now introduced. The plate, however, has not said its last word. Efforts have been made to increase the resisting power of the plate, not by increasing its thickness, but by the adoption of special modes of manufacture. The Société de Châtillon et Commentry appear to have found a solution of the problem in the adoption of metal-tempering baths, specially one of lead. Hitherto water or oil tempering has been used to modify the quality of steel, and specially to increase its resisting power. This, which only concerns hard steels, involves the inconveniences of causing frequent flaws or cracks when the pieces have any considerable magnitude. It is easy to explain this by the manner in which the cooling takes place in this process of tempering. With a metal-tempering bath, cooling transmits itself more readily through the mass, and cracks are thus avoided.

The Société de Commentry have applied lead-tempering to steels of all degrees of hardness, and have made numerous static and dynamic tests, and have established the fact that soft steels simply cast have the properties of forged steel. The metal tempering determines in the molecular structure a remarkable change. The firing trials at St. Jacques, near Montluçon, made by the society, have shown that the armor plates simply cooled offered the same resistance to a projectile as rolled steel plates of the same exact chemical quality. With very hard steels, samples have been free from cracks, although the amount of carbon would not have allowed of tempering under ordinary conditions without almost certain fracture. The process of immersion adopted consists in keeping the pieces cast or forged at a constant temperature throughout the mass, when they have been in the regions of temperature at which the particles of metal change, and at which cracks are produced. To carry this out the pieces, previously heated, are plunged into a metal bath formed of lead and are left to cool freely in this bath. By this means are obtained perfectly sound, even, regular pieces of metal, which have given notably better results than ordinary. This method, however, even more than the usual methods of forging and tempering, demands great knowledge of the conditions for working the steels to which it is applied. The temperatures to maintain vary very sensibly with the nature of the metal. Manufacturers must have thought out as much by theory as practice what

were the best conditions for the different steels in order to obtain thoroughly satisfactory results.

The society has originated, in addition to furnaces, special means and tools to secure ease, rapidity, and precision in manufacture such as special apparatus for dipping, blocks for fitting up and varying the form of the baths, optical instruments for rapidly perceiving the temperature, etc.

After various statical and dynamic trials by firing, the society established a practice-ground at St. Jacques, to study plates and projectiles, as well as the ballistic powers of guns. These trials have been carried out with war material both of attack and defense with the following results:

Material of attack—Forged steel shells.—Steel shells for the attack of compound plates, and also those of solid steel, are always made of crucible steel of great hardness, containing about 1 per cent. of carbon, with other elements. The application of the lead bath produces particularly good results on this metal, by giving it a great toughness; resistance to rupture is considerably increased, and may reach 130 kilograms per square millimetre—82.5 tons per square inch. It is the same with regard to resistance to impact. A shell of 34 centimetres has been submitted to service tests by the Navy and has given superior results to those hitherto obtained. These shells can be easily produced by the lead-tempering bath with great regularity and without fear of failures on account of flaws.

Cast-steel shells.—In these the lead-tempering only tells in the improved character of the products, because in any case the chances of failure are small. As an example of the improvement effected the society has furnished the following results, which are the means obtained from three bars:

English measures of shells.	Lead tempered.	Oil tempered.
Limit of elasticity	31.0 tons per square inch	28.8 tons per square inch.
Resistance to rupture	54.2 tons per square inch	48.5 tons per square inch.
Final elongation, per cent	9.0 per cent	6.5 per cent.
Trial by falling weight of 39.7 pounds on bars of ⅜ with a of 6.3 inches between the space supports.	8.5 feet	6.8 feet.

Gun tubes.—For these, which are made of soft metal well worked, the advantage of lead tempering appears chiefly in rendering annealing unnecessary. The few trials yet made we need not quote. The chief advantage will come when gun tubes are made of hard steel.

Material for defense—Shields.—The first experiments made by the Society were on samples from plates containing .54 and .64 of carbon, and consisted in comparing resistance to rupture and elongation before and after tempering, as well as to impact. With steel of .54 carbon the resistance to rupture passed from 62.6 kilograms (39.7 tons) to 76 kilograms (48.3 tons) rupture, and the elongation from 15.5 per cent. to 9.5. For steel of .64 carbon resistance was increased, passing from 77.3 kilograms (49.1 tons) to 89 kilograms (56.5 tons), and elongation, which was 10.5 per cent. before tempering, was 13 per cent. after tempering. In these trials an anomaly exists such as is often seen, but as the important matter is the resistance to projectiles, it is useless to dwell on these preliminary trials. We will limit ourselves to results of Society trials on steel plates simply cast and afterwards brought to the condition of forged metal by immersion in metal baths. The results compare absolutely with those made on rolled plates. On plates of compound metal of which the steel part contains .73 carbon, the plate simply tempered had a limit of elasticity of 39 kilograms (24.8 tons), a resistance to rupture of 80 kilograms (50.8 tons), with 10 per cent. elongation. Plate

tempered in lead had a limit of elasticity of 58 kilograms (36.82 tons), resistance to rupture—ultimate tenacity—95 kilograms (120.6 tons) and 12 per cent. elongation.

The firing trials at St. Jacques are conducted under identical conditions in order to be strictly comparative. The plates had .276 metre thickness (10.87 inches), being 1.5 metre (4 feet 11 inches) by .735 metre (2 feet 5 inches) in breadth. A 95-millimetre (3.7 inches) gun was employed. The initial velocity of the projectile was 416 metres (1,365 feet). The projectile with ogival head weighed 11.4 kilograms (25.1 pounds) either of hard cast-iron—chilled—or of chrome steel. The penetration was much less in lead-tempered plates than in ordinary plates, and the number of blows borne was consequently increased considerably.

On plates of 12 centimetres thickness (4.72 inches) the effects of the lead bath exhibited at the practice-ground at St. Jacques have been very remarkable. They have been confirmed by trials made at Gâvre by the Navy on a plate of the same thickness. At St. Jacques the plate was attacked by direct fire with cast-iron (chilled?) projectiles of 95 millimetres (3.7 inches), weight 11.4 kilograms (25.1 pounds), with a striking velocity of 430 metres (1,411 feet); that is, 20 metres (65.6 feet) above the exact velocity to perforate an iron plate of the same thickness. The gun was 10 metres from the plate, and the points of impact formed an equilateral triangle of 240 millimetres (9.45 inches) for each side. Three blows were delivered. The projectile was broken at each blow, and after the third blow the plate showed no crack or injury.

Experiments with thick plates are difficult to carry out at St. Jacques, and can be carried out only at Gâvre. Doubtless the Society of Commentry will obtain opportunities of continuing the trials on plates of different thickness. There is no use in disguising the fact that different thicknesses may demand different qualities; perhaps even the composition of the metal may have to vary with the thickness of the plate. Ballistic experiments with plates of varying thickness are especially necessary to furnish definite information on the subject.

ARMOR TRIAL AT MUGGIANO, ITALY.

The reports of the Terni armor trials come through the Italian press, and may perhaps be somewhat colored; the information, moreover, is very meagre.

The trial took place on December 5. The plate was made at the Terni works according to the Creusot process; it was one of a lot intended for the *Ruggiero di Lauria* class of vessels, and measured 48 centimetres in thickness. The projectile employed against it weighed 908 kilograms, and was fired from a 100-ton Armstrong gun. It is not stated, however, whether the gun is the 450-millimetre M. L. or the 431-millimetre B. L., both of which weigh 100 tons and fire a 2,000-pound projectile. The 431-millimetre has an initial velocity some 300 foot-seconds greater than that of the 450-millimetre gun.

Only one round was fired, with the result that the projectile broke up into innumerable fragments after penetrating to a depth of only 15 centimetres. The face of the plate showed only a few unimportant cracks.

The Italian Minister of Marine has stated in Parliament that the Terni plates have given as good results on trial as any plates that have been received from abroad.

EXPERIMENTAL HIGH-ANGLE FIRE UPON PROTECTIVE DECKS.

During the past year Krupp has experimented with a 28-centimetre (11-inch) rifled howitzer for range, penetration, and dispersion.

With a 216-kilogram projectile and a 28-kilogram charge of prismatic brown powder the mean of 10 rounds gave a range of 9,864 metres (about 5.3 miles), the angle of fire being 45 degrees and the initial velocity 361 metres. The times of flight varied from 47.52 to 47.76 seconds. Longitudinal dispersion, 119 metres; lateral, 49 metres.

The fire for penetration was first directed against a horizontal target measuring 12 metres in length by 3 metres in width and composed of eight plates, four of a thick-

ness of 75 millimetres and four of 50 millimetres. Thirty-six rounds were fired at a 1,500-metre range with a charge of 6.5 kilograms of 6- to 10-millimetre grain powder, and 24 rounds with 8.5-kilogram charge, the angle of fall in both cases being from 56 to 59 degrees, and the striking velocity 132 metres for the lesser and 150 metres for the greater range. Only five shell struck the target; the 50-millimetre plates were fractured, but those of 75 millimetres were only bulged at the points of impact.

The dispersions at the first range were: Longitudinal, 44 metres; lateral, 4 to 5 metres. At 2,000 metres: Longitudinal, 74 metres; lateral, 6 to 7 metres.

To avoid further loss of ammunition the second target, composed of plates of same thickness as the preceding one, was inclined away from the gun at an angle of 60 degrees above the horizon. The range was reduced to 125 metres. The plates were faced on the side towards the gun with 60 millimetres of planking, the target thus representing a section of protective deck. The first round was with a charge of 11 kilograms of prismatic powder and a 345-kilogram projectile, which was given an initial velocity of 173 metres. The shell struck the 75-millimetre plate and bent it, but failed to cause any fracture. The second shell, with same charge, fractured the 50-millimetre plate. The succeeding shell, fired with an 18-kilogram charge and having 232 metres initial velocity, struck the 75-millimetre plate, making a circular hole about 1 metre in diameter besides causing a long, deep crack.

The foregoing rounds were all executed with cast-iron shell, and the conclusion drawn from the experiments is that such projectiles when fired at low velocities are dangerous only against extremely thin plates. The shell invariably broke up on impact or before arriving at any depth of penetration. This was doubtless due to the inherent weakness of the metal and also to faulty construction, the presence of the fuze-hole at the very point of impact being an undoubted source of weakness.

Trials have been made with percussion base fuze with fair success, and with such arrangement it is believed that much better results would have been obtained than those indicated.

In continuation of the above experiments, 2 rounds were fired in which steel armor-piercing projectiles were used. The first round, with a 255-kilogram projectile and only 5.5 kilograms powder charge, fractured a 75-millimetre plate, and the succeeding one, with same shell and 18-kilogram charge, perforated the plate and smashed it into fragments.

AUSTRIAN ARMOR TRIALS.

These trials were made with a view to test the comparative resistances of the Krupp cast-steel and the Leobersdorfer chilled cast-iron armor at long range, and were conducted on the Felixdorfer grounds, May 20 to June 7, 1887. The following is an abstract of the experiments as reported by the Vienna *Militär-Zeitung:*

The firing was directed upon two armored mortar batteries constructed after the most modern designs; one was protected by cast-steel armor furnished by the Essen works, the other by chilled cast-iron armor made by the Leobersdorfer foundry, in Austria.

The gun employed is the 21-centimetre bronze B. L. mortar, firing a pointed projectile of 93 kilograms weight containing a bursting charge of 3.25 kilograms.

The angles of fall of the shell striking the Krupp cupola varied between 60 and 65 degrees, and the trajectories had maximum heights of 1,700 to 1,800 metres. The first shot to take effect broke the cupola in two parts, but a second shot striking one of these parts caused only a triangular crack on the inside.

The Leobersdorfer armor received five direct hits at angles of fall varying between 40 and 53 degrees without suffering the slightest damage; in fact, to the eye, the effects were scarcely perceptible.

The results are considered by the Austrians in the light of a decided victory for the armor of home manufacture; the more so as, owing to the high angle of fall of the shell striking the Krupp cupola, they did not produce their maximum effect.

SIEMANG'S COMPOUND ARMOR.

This armor is the patented invention of Lieut. Siemang, an officer of the Austro-Hungarian artillery.

In its simpler form it consists of a chilled cast-iron face, backed by a plate of wrought-iron or steel, but in some cases the plate is introduced into the middle of the cast-iron mass.

The patent specifications deal chiefly with the manner of welding the two metals together. The central wrought-iron or steel plate, made to the desired thickness, is heated to a red heat and is then placed in a bath of molten iron or steel, in which it is kept moving about until it has almost reached the melting-point, or until the metal of the bath begins to attach itself to the plate. At this moment, which is one easily recognized by the practised eye, the plate is quickly transferred to a prepared mold, and molten cast-iron is run in until it is full. Stress is laid upon the manner of running the metal in. The gates by which it enters must be close to the plate, so that the stream shall wash both surfaces and keep them at the same temperature. One side of the mold is faced with an iron plate to give a chilled surface.

Since the issue of the letters patent an improvement in the above method has been made, by which the plate may be heated to the required temperature in the mold itself. This is shown in the cut.

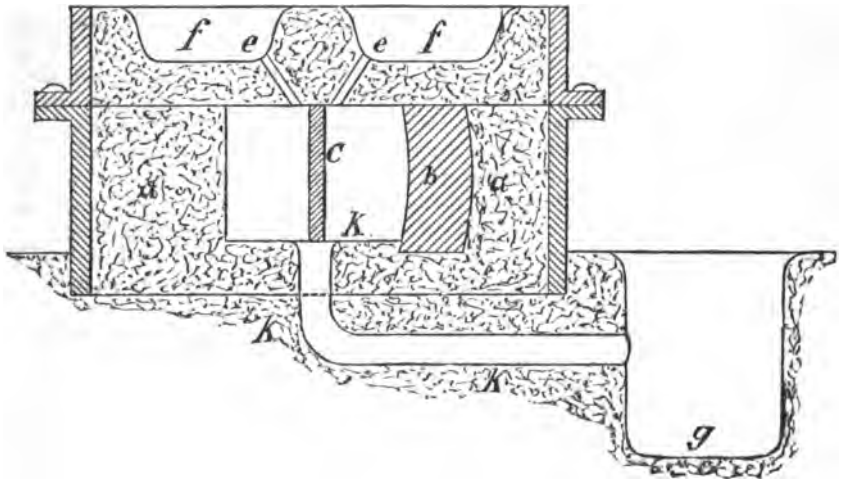

A continuous stream of steel or iron passes from the gutters *f* through the gates *e* along both faces of the plate C and through the waste outlet *k* to the well *g*. At the proper moment, *i. e.*, when C has arrived at the proper temperature, the outlet *k* is stopped up, and cast-iron is run in until the mold is full. *a* is the mold, preparep of sand or loam, and *b* is the chill of steel, iron, or other good heat conductor.

It is claimed that by this method a perfect weld is formed.

The subject of protection is so closely allied to that of armor, that it will not be amiss to introduce here a brief notice of—

WOODITE.

This substance is a patented manufacture, the principal element of which is india-rubber. It is highly elastic, is not affected by salt water, and is non-inflammable. It has been proposed to attach this material in the form of cubes to the outer skin of boats or ships as a protection against gun-fire, the object, of course, being not to

withstand penetration, but to preserve water-tightness after penetration through the resilient properties the material possesses.

Some experiments to determine the exact value of these properties were made in England in 1886. The target on this occasion consisted of thirty-six 8-inch cubes vulcanized onto a three-eighths-inch iron plate, which in turn was secured by screws and nuts to another three-eighths-inch plate supported in a light iron frame. The cubes were disposed in one layer, so as to cover an area 4 feet square. The firing was from Nordenfelt 3- and 6-pounder R. F. guns. Three shots from the 6-pounder and one from the 3-pounder were fired square at the target, and two 6-pounder shots were afterwards fired at an angle of 45°, the range in all cases being from 40 to 50 yards. The effect in every instance was that the projectile pierced the woodite and punched a hole through the iron backing from 2 to 3 inches in diameter, the holes made by the diagonal shots being slightly larger than the others. The effect upon the woodite itself was a surprise; it was difficult to discover the points of entry, and when the cubes were examined at the back it was found that they were not in the least rent or torn. The protection against the influx of water was perfect.

Woodite for protective purposes weighs about 50 pounds per cubic foot.

Sir Edward Reed, in a paper recently published in Iron, refers in the following terms to the application of woodite to the external protection of vessels:

"It is astonishing that this extraordinary and valuable property (resilience) has not been more readily made available in the unarmored parts of men-of-war, more especially as the so-called war ships now in vogue can only be made fairly safe and efficient by the adoption of this or some similar method of excluding the sea from injured compartments. Most of those present are probably aware that since my report was written, in 1886, further experiments have been made on one of H. M. ships with india-rubber sheets, with the result that within our admiralty some gentlemen have concluded that water-tightness is not really secured after shot have passed through. It would, in my opinion, be very hasty and ill-advised to draw this inference generally, and to apply it to blocks of woodite of several inches in thickness. From a close examination of such blocks after repeated penetration, I am thoroughly satisfied that where, as in these, the resistance of the material is allowed to come into full play the hole so closes after the shot has passed through as to make the block as water-proof as ever; proof, I mean, to any such pressure of water as can possibly result from or be due to the depth of a block within or upon a ship below the sea's surface. This being so, and having regard to the immense extent to which our naval power is now being made to depend upon unarmored or imperfectly armored vessels, it appears to me that systems of giving to such vessels the protection of blocks of woodite temporarily, and for war periods only, ought to be taken into serious consideration. It would not be difficult for ship-builders to devise means of fitting such protective blocks to vessels, either externally or internally, between wind and water, and I feel satisfied that the result would be the saving in war of many ships which, in their present condition, are liable to prompt destruction under the fire of machine and quick-firing guns. * * * It does seem unaccountable that torpedo-boats and their steel torpedo-boat catchers should be deprived of the priceless protection which screens of woodite would afford to them. The same remark may be made as to its application as débris screens in larger vessels of war."

The above quotation seems to have a direct bearing upon certain utterances of the Secretary of the Navy in his last annual report. The Secretary says: "The Department deems it unwise to follow at present the course of the European powers in building *unprotected* torpedo-boats." And again: "The abandonment of the unprotected boat does not involve the abandonment of the projectile (the torpedo). * * * If these various devices fail (submarine boat and pneumatic dynamite gun) *protected boats* can be built of small tonnage, of light draught, proof against machine-gun fire."

C. E. VREELAND,
Lieut., U. S. Navy.

TORPEDOES.

The Whitehead is increasing its speed and charge in order to maintain its superiority of speed over that of ships, and to meet the advance in the protection of their under-water hulls. Ships are now better protected against under-water attack by the extension and strengthening of their double-bottom cellular system, and also by steel-wire nets projecting some 30 feet from the side. The *Resistance* experiments have shown that 100 pounds of gun-cotton might not be sufficient to sink a modern ship, as the effect might be limited to one compartment; with a heavier charge it is probable that not only would one compartment be opened, but the bulk-heads of adjoining compartments started or perhaps bulged in so as to destroy the adjustments of the machinery.

With an increase of speed the deflections of the torpedo, due to rolling, will be increased, and the demand for some means of reducing this rolling motion, even by artificial ballast, becomes more urgent. To fill these requirements for speed and charge the torpedo must be larger than those heretofore in use. Nor should the equipment of the larger ships with heavier torpedoes be any more open to objection on the ground of introducing torpedoes of different sizes than the arming of an armor-clad with guns heavier than those supplied to a cruiser or gun-boat.

Controllable torpedoes, it is now generally admitted, will be most effective when operated from the shore against ships in narrow channels; the location of those requiring a fixed plant will be known, and their attack visible or anticipated. Floating objects interfere with their course; ice for instance, even in small quantities, would prevent them from reaching their targets.

The Patrick, or improved Lay-Haight, uses for its motive power carbonic acid. The motive power of the Nordenfelt is electricity supplied by a storage battery carried in the torpedo. Both these torpedoes have good speed and are not dependent on a fixed base. The Sims-Edison is the slowest of the controllable type, and requires a dynamo and engine at its base of operation to propel and manœuvre it. The mechanically controlled Brennan is reported to have made 20 knots (but this speed is doubtful, knots may have been intended for miles), and it is not stated whether this was made on a surface or a submerged run. Its change of direction is small and probably sluggish. An incident in its trial of July, 1887, shows that boats crossing the wake of the torpedo may foul the wires, and suggests the possibility of cutting them.

CONTROLLABLE TORPEDOES.

BRENNAN TORPEDO.

The British Government has adopted the Brennan controlled locomotive torpedo (previously described, page 43, No. VI) as an auxiliary weapon of harbor defense, after a great number of careful experiments made by the Royal Engineers. It is the first of its type that has been definitely introduced by any European country into its system of harbor defense. Certainly every encouragement was offered Mr. Brennan. After the initial experiments at Chatham he was awarded £5,000, and an annual amount of £1,000 for five years to complete and perfect his torpedo, and having improved it to the satisfaction of the Royal Engineers, the British Government has adopted it and paid him £110,000 for the exclusive right of manufacture.

The torpedo is said to have attained a speed of 20 knots, and further advance would seem to be limited only by the strength of the impelling wire; its weight, fully equipped, is 25 cwt.; range, 1½ to 2 miles; it can be regulated to run on the surface or at a depth of 8 to 10 feet; it can be steered 30° to 40° to port or starboard, but can not be manœuvred back to its starting point. It is launched down a ways, and is then further propelled by the unwinding of wire from reels in the torpedo. The wire is drawn in and wound up by two drums driven at a high speed by a stationary engine on shore close to the ways; its diameter is .049 inch; breaking strain, 6 to 7 cwt.; weight, 33 pounds to the mile. The length of the wire on each reel is three times the length of run. The drums of the winding engine are 3 feet in diameter, driven by a pair of direct-acting, high-pressure engines; they run loose on the shaft, and their speeds can be regulated without varying that of the engine. The working parts of the engine are nearly inclosed, so as to reduce the chances of fouling in case the wire should part. A light steel mast with a flag serves to show the course of the torpedo when submerged. At night the flag is replaced by a 16-candle incandescent lamp in a funnel-shaped shade, with the apex pointing towards the object. This mast is said to reduce the speed 4 knots.

The torpedo is propelled by unwinding wire in the same direction from two reels on concentric shafts. The motion of the outer shaft is reversed by a bevel-gearing (similar to that used in the Whitehead) near the stern, so as to revolve its screw in the opposite direction to that of the inner shaft. The revolution of the forward parts of the two shafts is in the same direction, for the purpose of regulating the steering by running the two shafts at different speeds. This is effected by: a thread cut in the solid shaft; a longitudinal slot in the hollow shaft; a collar with a projection on its inner surface, fitting in the slot of the hollow shaft; a thread cut on the inner side of the projection, which engages the thread on the solid shaft: consequently, different rates of revolution of the two shafts will cause the collar to move forward or aft, and by means of rods and levers this motion is utilized to port or starboard the helm.

The immersion is regulated by two horizontal bow rudders worked automatically by a pendulum and a hydrostatic piston, as in the Whitehead, but without the intervention of an air-engine. Lately, the undulations are said to have been reduced to a maximum deviation of 10 inches from a straight line.

The following is taken from the United Service Gazette, October 26, 1886:

"No. 69 torpedo-boat, with a small target, was dispatched out of Sheerness Harbor at full speed, when the torpedo was discharged from Garrison Point fort by Mr. Brennan and successfully steered towards the target, which it struck while moving past at a speed of 16 knots."

The following is taken from Engineering, July 29, 1887:

"An official run was made with the torpedo off Garrison Point, Sheerness, on the 21st instant. The torpedo, as it lay on its cradle on the tram line leading down to the water's edge, presented the appearance of a fine salmon, very narrow as compared with its depth, full forward with a very fine run. On the bow were fixed two horizontal rudders and two small vertical fins, one above and one below. A few feet aft was placed a steel mast some 10 feet high, surmounted by a red flag and supported by three stays from forward. On the stern were fixed two vertical fins, one above and one below, and joined together abaft the two three-bladed propellers. The two wires from the torpedo were led through a fair-lead in the after end of the upper after fin.

"From the winding engine in the fort the wires were led through an embrasure some distance above the water level and connected with the wires in the torpedo. The cradle containing the torpedo was pushed down the ways into the water. The torpedo on taking the water darted ahead at a great speed and dived down to the red flag; it then rose to the full length of its mast, creating considerable disturbance of the water over its propellers. The torpedo made the greater part of its run (about 1½ miles) in this position, plunging twice down to the red flag. After running a considerable distance the steering wheel was turned and the torpedo instantly turned to

starboard down stream, and the wheel was moved in the opposite direction to straighten the torpedo up; it apparently refused to answer the helm, so Mr. Brennan was obliged to stop it. Immediately after stopping a barge half way between the shore and the torpedo fouled the propelling wires, which were not hauled in over the bottom, but in a direct line from the torpedo to the winding engine.

"In a previous experiment the inventor, wishing to demonstrate his control of the torpedo by running close to a launch, struck the launch in the stern and the torpedo remained imbedded there."

THE PATRICK TORPEDO.

The Patrick torpedo, described in No. VI, page 35, has been further developed and improved during the past year to meet the requirements of the French Government, from which the company has received an order. A torpedo made under this order was finished last November, but on account of unexpected delays and the approach of winter the definite trials before the French naval officers were postponed until the current summer.

This torpedo, of the controllable or dirigible type, is similar to but slightly larger than the first made, being 40 feet long and 24 inches greatest diameter. The float, filled with cotton, is 46 feet long, and is so placed as to overlap the rear end of the torpedo some 6 feet; its greatest diameter is 18 inches. The torpedo is submerged 1 metre below the surface. The weight of the torpedo complete is about 7,300 pounds. The explosive charge carried is 200 pounds.

The length of wire carried is 8,400 feet, but the torpedo is known as of the one-mile class.

It has recently been tried before boards of Navy and Army officers, and will soon undergo its contract trials before the board of French officers. The result of four recent trial runs indicates an average speed over a measured mile of 20.21 statute miles, or 17.54 knots. The best run was made in $2^m\ 53^s$, or at the rate of 20.81 miles, or 18.06 knots; and the slowest in $3^m\ 4^s$, or at the rate of 19.57 miles; but on the latter occasion the time might have been materially reduced had the torpedo been well steered. The speed exacted under the contract with the French Government is 17 knots.

The advantages of the Patrick torpedo, as compared with others of its type, are good speed, great regularity of speed during entire run, and considerable mobility, it and its appurtenances being independent of an elaborate and special fixed plant from which to receive its motive power.

THE NORDENFELT TORPEDO.

A successful trial was made with the Nordenfelt electrical torpedo in the Thames, at Erith, on the 15th of June, 1888.

The torpedo is described as being cigar-shaped. It moves 6 feet below the surface, two floats indicating its position to the manipulator. Its length is 35 feet; maximum diameter, 29 inches; total weight charged for action, 6,200 pounds; explosive charge, 300 pounds, which can be increased to 500 pounds. The torpedo contains its motive power, the propelling and steering apparatus, and cable.

The motive power, electricity, is supplied by 120 storage cells, which develop 18 H. P. The motor weighs 780 pounds, and drives a screw at 1,100 revolutions per minute. The speed obtained is reported as 14½ knots. The torpedo is steered by a balanced rudder, manipulated from the shore through a three-cored cable 3,000 yards long, but 4,000 yards or even more cable can be carried.

To determine the steering powers of the torpedo, a pair of red flags 50 feet apart was placed some distance from the operating station, and half a mile further on another pair was similarly placed. The torpedo passed centrally between the first and second pairs of flags. Its estimated speed was 14 knots in the last half mile. The torpedo was stopped, reversed, and run back to starting point at good speed.

A third run was made with similar results. The torpedo had then traveled nearly two miles, and had exhausted its cable.

It was not possible to thoroughly demonstrate the manœuvring powers of the weapon, owing to the proximity of several moored vessels and the frequent passing of others.

Mr. Nordenfelt has in hand another of these torpedoes which will carry 180 storage cells, developing 34 H. P., and giving a speed of 16 knots at 1,500 revolutions per minute.

AUTOMOBILE FISH TORPEDOES.

THE WHITEHEAD TORPEDO.

The present automobile torpedo is even yet somewhat defective.

The Whitehead is heavy in proportion to its charge, and it is delicate and loses its accuracy when launched in a sea way. The fine steel mechanism rusts quickly and necessitates taking the torpedo apart, which operation requires a skilled personnel.

It is stated that during torpedo practice by the Mediterranean squadron in Grecian waters in January of this year, a Whitehead was lost, and although the strictest search was made, the missile was not found. The practice was conducted at a speed of 12 knots. Several torpedoes missed fire. One torpedo-carriage tube burst. Some of the carriages were pronounced failures.

During practice at Malta by a second-class torpedo-boat, March, 1888, one of the Whiteheads was lost. The spot was at once buoyed and divers sent down as soon as possible, but the torpedo was not found. This is the second torpedo reported to have been recently lost in this squadron.

The new French torpedoes are 19 feet long and 16 inches in diameter. In trial runs they have made 28.9 knots for 200 metres, with an air-pressure of 85 atmospheres. With the same pressure and the reducing valves accurately set, it is claimed that 30 knots can be made for 200 metres, 28 knots for 400 metres, 25 knots for 600 metres, 24 knots for 800 metres, with an extreme horizontal deviation of 20 metres. The report that the French have found that the motion of torpedo-boats at sea, or their vibration at certain speeds, destroys the adjustment of the immersion regulating pendulum is denied.

A new type of torpedo for ships and torpedo-boats is 15½ feet long, and about 14½ inches diameter, with a very blunt head carrying a charge of 220 pounds of gun-cotton. No special shape of head is adhered to, as this does not seem to have much effect on the running of the torpedo, and in the later models the tendency is to make the after body finer, and to increase the length of the torpedo as much as governments will allow, to stiffen the trajectory.

The details of manufacture of the different parts vary with the country for which they are intended, and consequently their cost is variable. The strength and malleability of aluminum bronze recommend its employment in the Whitehead. Experiments are in progress with a view to making air-flasks of this metal. It is supplied by the Cowles Electric Smelting and Aluminum Company, of Cleveland, Ohio. This alloy is 90 parts copper, 10 parts aluminum. A piece cast, not forged, broke at 57,000 pounds per square inch; forging strengthens and improves the material. It costs 40 cents a pound.

In England during the year 1886–'87, 131 torpedoes were manufactured and issued ready for service, and a further number of 126 has been issued during the last financial year ending March 31, 1888. The French have ordered 550 torpedoes from Whitehead in the past three years, increasing the number considerably each year.

Opinions of some English naval officers regarding the Whitehead.—At a meeting of the Royal United Service Institution on April 25, 1888, the following opinions were reported as having been expressed by English naval officers with regard to the performance of the Whitehead.

Capt. Hubert Grenfell, R. N., considered the average effective range of the torpedo to be 400 yards against a stationary object, and 300 yards against one in motion; but to be safe from under estimation, he would say 500 yards under both conditions.

Lieutenant Laurie, R. N., just from sea as gunnery officer on a fast cruiser, said that torpedo practice in ordinary service was nearly always carried out in calm weather, and, supposing other conditions favorable, the average percentage of hits would be 75 at 400 yards, with a target 300 feet long; that torpedoes were very seldom fired in rough weather on account of the risk of losing the torpedo, for which mishap an officer would incur the extreme disfavor of the Admiralty; he had seen a torpedo in a sea, the waves of which were 6 feet from crest to hollow, stick its nose out of water, dive, and take any but the course intended.

Captain Harris, R. N., held the same opinion as Lieutenant Laurie, that in a rough sea the course of the torpedo was erratic in the extreme.

Captain Wilson, R. N., had seen practice with exceedingly good results, when the waves were big enough to dip the ejecting tubes under water.

SCHWARTZKOPFF TORPEDO.

These torpedoes are made by the Berlin Machinery Construction Company. They are entirely of phosphor bronze, but their interior arrangement is the same as that of the Whitehead. The principal improvements in the Schwartzkopff are the substitution of phosphor bronze as the material for the air-chamber, the perfection of the steering apparatus, and some changes in the motive machinery. The air-chambers are tested to 135 atmospheres, and the working pressure is 90 atmospheres. No accidents have yet occurred with phosphor bronze; it is said, however, to be soft. It is claimed for the Schwartzkopff that it is more reliable and more accurate than the Whitehead, though the latter is believed to be faster for the first 200 yards, and it is stated that the Schwartzkopff is in condition for immediate use after lying three months in the launching tubes.

The latest product of this company is a new type of torpedo in four sizes, to carry 40, 53, 73, 115 kilos of gun-cotton, and to make 25, 26, 26½, 27½ knots. This increase of speed and weight, it is claimed, will enable the torpedo to pierce the strongest nets. [Doubtful.—ED.]

The Italian Government is said to have ordered 700 Schwartzkopffs, price 6,000,000 marks, about $2,000 apiece in United States currency; these torpedoes are to be delivered in six years; works to be constructed in Venice for manufacture.

The Japanese Government is also reported to have ordered during the past year 150 Schwartzkopffs. The experiments in Japan with the different makes are said to be decidedly favorable to those of German construction.

The *Pelayo*, first-class Spanish iron-clad, is fitted to receive 7 discharging tubes on her armored deck. Her 14 torpedoes will be Schwartzkopffs.

THE HOWELL TORPEDO.

The patent rights of this invention were acquired by the Hotchkiss Ordnance Company, Limited, on February 1, 1888. This company is manufacturing and developing the torpedo both in this country and at their works at St. Denis, in France. In a proposition submitted to the Navy Department two sizes were proposed guaranteed to give results as follows:

	No. 1.	No. 2.
Length not exceeding	9′ 6″	12′
Diameter not exceeding	14″.2	16″
Weight not exceeding ... pounds	428	580
Charge of gun cotton, at least ... do	75	100
Speed for 400 yards ... knots	22½	23
Range total ... yards	800	1,000

The Hotchkiss Company is prepared to discharge the Howell torpedo by swinging out or by ejecting from tubes. In the latter case, compressed air will be used. The tube apparatus can be fitted to any of the ships now building.

The Howell possesses the following advantages over the Whitehead: Inherent directive force, heavier charge in proportion to total weight, smaller size, simpler mechanism, less cost. The Whitehead has greater speed, but this superiority may disappear with the development of the Howell. In short, the possibilities of the Howells have now become such that all first-class naval powers will doubtless give it a trial at least.

THE HALL TORPEDO.

The Hall automobile torpedo is still in the experimental stage. Trials so far have been with the torpedo partly equipped.

The following is a description of the torpedo as used in the trials: Length, 12 feet; diameter, 14¼ inches. There are three compartments, the forward containing the magazine and the firing apparatus; the middle, the air flask and engine; the after, the diving and righting valves.

The motive power is compressed air in a flask 8 feet long; the engine case forms the after head of the flask. There is a single direct acting engine for each screw; length of stroke, 4 inches; diameter of cylinder, 4 inches; the propeller-shafts are geared to the crank-shafts in the proportion of 3 to 1. Check-valves in the hollow screw shafts allow the exhaust air to escape, and prevent water from entering at the end of a run.

The after section, the depth-regulating compartment, has in its top an adjustable telescopic tube, and in the bottom an aperture; by both of these the compartment is accessible to water which rises above the bottom of the telescope until the water and imprisoned air are in equilibrium.

The righting valve in this compartment has orifices at the top, bottom, front, and back; the exhaust compressed-air escaping through the upper or lower outlets in the skin of the torpedo depresses or raises the stern. This valve is worked by an arm connected with a float resting on the water that has gained access to the after compartment; the float takes different positions according to the inclination of the torpedo, and operates the valve so as to give an outlet to the air through the upper or lower orifices as required to bring the torpedo to its proper immersion.

With the telescope adjusted for a surface run, the compartment is half full of water, the righting valve is in its neutral position, the top and bottom orifices barely open.

Double-acting trunk engines have been substituted for the single-acting engines, but no trials have yet been made with them.

The proposed magazine is pivoted at its after end, suspended by hangers at the forward end, and centered by springs, permitting lateral movement which actuates pectoral fins. When the torpedo rolls the lower fin is pressed out and the upper one pulled in. This action of the fins is for the purpose of preventing a deflection of the torpedo from its course due to rolling.

"RESISTANCE" AND TORPEDO NET EXPERIMENTS.

The following is a description of the damage done to the *Resistance* by the explosion of June 14, 1887: (This experiment was noted in No. VI, page 346, but up to the time of its publication, the details of the damage were not known.) A 95-pound charge of gun-cotton was exploded in contact with the starboard bilge at a depth of 20 feet. The result was a hole 13 feet long by 8 feet broad in the outside plating. The space next the outer skin was empty, that next the inner skin was filled with coal. The diaphragm seven-sixteenths of an inch was badly torn, several large holes being blown through it. The inner bulk-head of the coal space was bulged in, the riveting at one point being sheared off, letting the water into the inner large compartment. The bulk-heads of this compartment leaked so badly, the ship finally sank.

The following account is summarized from the English papers: The *Resistance* having been repaired at the Portsmouth dockyard, and considerably strengthened so as to cause her to resemble a modern armor-clad, torpedo experiments were resumed on February 2. The trials are made under instructions from the Torpedo Committee, and the experiment was intended as a further test of the value of net defenses as a protection against the Whitehead torpedo, under a new method of fastening the nets by Mr. Bullivant. The nets were suspended on the starboard side from the usual service booms at a maximum distance of 30 feet. The booms, which were socketed to the ship, were spaced 45 feet apart, the heels being about 4 feet above the water, and the charge, which consisted of not less than 90 pounds of gun-cotton, was lashed about midway down the net, below the boom. The two forward booms were blown bodily from their fastenings and the net sank out of sight. On the net being fished up, it was found that the attachments to the ridge-rope had not been damaged in the slightest degree, and that with the exception of a local and clearly-defined rift, not a grommet had been displaced. Some of the old wounds in the bottom of the hulk were reopened. The ship listed over to starboard and gradually settled by the stern in the mud.

The following is taken from Engineering, February 10, 1888:

"An examination has been made of the hull of the *Resistance* which was damaged by the torpedo exploded near her eight days ago. Though all the patches on the side were found in place and did not appear to have been bulged in, yet nearly all the rivets fixing these plates have been sheared off so that the seams had opened in some cases to nearly an inch."

An experiment was made by the Torpedo Net Defence Committee on the *Resistance*, May 15, for the purpose of testing the endurance and efficiency of wooden booms for supporting nets, and more particularly the value of improved heel attachments. Dimensions of booms tried: Diameter, 10 to 12 inches; length, 33 feet; with its gear, each spar weighed about a ton. There were three booms on each side, spaced 45 feet apart; they were supported by double guy-ropes from a point below the range of broadside guns, and also, as a precaution against accident, by topping lifts. The heads of the booms were lowered to within 2 feet of the water-line. The mine, consisting of 93¼ pounds of gun-cotton, was suspended under the middle boom and 10 feet below the surface of the water. The port booms were attached to the ship's side by a modification of the Téméraire hook, and the starboard booms by a connection invented by one of the constructors of the dock-yard.

The charges were simultaneously exploded, the center boom on the starboard side was completely severed at the head, but the heel attachments remained intact; on the other side, the center boom was blown from its attachment, but was otherwise uninjured.

In a previous experiment, steel booms weighing 6 cwt., were bent by the explosion of 92 pounds of gun-cotton, but so slightly as not to impair their efficiency, and they were afterwards straightened in about an hour aboard ship. To obviate this defect later Bullivant booms were made to weigh 8 cwt., and it is claimed that the explosion of even a much larger charge will not cause them to bend.

In England and France torpedo nets are carried by armor-clads only; but in Italy they are also fitted to unarmored cruisers.

J. T. NEWTON,
Lieut., U. S. N.

TORPEDO-BOATS.

The naval manœuvres of 1887 abroad confirmed the opinion formed in 1886 that torpedo-boats of small tonnage are not adapted for service at sea, and that their field of operations is restricted to operations on or near the coast and in harbors. The tendency at present is to build boats exceeding 130 feet in length, with displacements ranging above 90 tons, carrying machine and rapid-fire guns in addition to the torpedo armament.

European powers have begun but a comparatively small number of torpedo-boats during the past year, although a large number have been added to the strength of the fleets; but these have, in a majority of cases, been completed in fulfillment of old contracts.

In general it may be fairly said that the smaller type of torpedo-boat, so highly thought of in 1885, has lost much of its prestige.

The principal sources of weakness in the smaller boats have been found to lie in inefficient boilers and light construction of hull. A new boiler, invented by Messrs. Thornycroft & Co., described on page 230, has been largely adopted and is giving very satisfactory results; and the tendency to work more material into the construction of the hull and protection of vital parts bids fair to overcome the second weakness noticeable in the earlier boats, in which so much was sacrificed to speed.

The necessity of torpedo repair and supply vessels again made itself apparent during the naval manœuvres. In England, a large and powerful vessel, the *Vulcan*, described on page 303, is building, and in Italy two vessels of this class are to be built. The Germans have appreciated the value of this class of vessel for some years, and have constructed division torpedo-boats (see No. VI, page 339). These vessels are fitted with complete work-shops and spare stores, and are intended to accompany divisions of torpedo-boats.

The difference of the speed of torpedo-boats on trial and in actual service, almost always considerable, was well illustrated in the races of the English torpedo flotilla in the Channel, in which the victor attained a mean speed of but 16.25 knots per hour for five hours, while on the original measured mile it realized a speed of 21 knots. This was also illustrated in the competitive trials of Russian torpedo-boats of various types in the Baltic in September last (described on page 404), the loss of speed amounting to 2½ to 4 knots in boats but a year old. The single exception known to this rule is that of the Normand boat *Sveaborg*, which realized in this trial its original trial speed.

The trials of the Nordenfelt submarine torpedo-boats in England and Turkey have attracted considerable attention, and mark a new phase in torpedo warfare. Their present under-water speed of 4 or 5 knots is very low for efficient service against ships under way; but the attention of inventors and naval constructors is now directed to this type of boat, and doubtless it will be largely developed in the future. In a circular recently issued by the Navy Department calling for proposals for a submarine topedo-boat an under-water speed of 8 knots is deemed requisite. This circular probably indicates the most advanced thought and opinion in regard to submarine boats. The results of this invitation for proposals are described on page 411.

AUSTRIA.

The *Meteor*, torpedo division vessel, built by Schichau, being of 350 tons displacement, is classed in this office and is described as a ship on page 322. Her trials were so successful as to induce the Austrian Government to order a similar vessel from the same builder.

Five torpedo-boats of the Schichau type were built at Pola during the year; three were of 60 tons, and two smaller.

It is proposed to add seven torpedo-boats to the Austrian fleet, one of which will be built during 1888.

The Stabilimento Tecnico of Trieste has recently built a torpedo-boat which it is expected the Austrian Government will purchase. The dimensions are, length, 135 feet; beam, 15 feet 1½ inches; depth, 10 feet; displacement (load), 103.79 tons. The engines are 3-cylinder compound, to indicate 1,400 H. P. Armament, 2 torpedo tubes and 4 torpedoes. She is expected to realize 20 knots at load draught.

CHINA.

The 128-foot Yarrow, described in Gen. Inf. Series, No. VI, p. 338, reached Hong-Kong safely in November, 1887, in company with the Chinese armor-clads, having been towed most of the way. The armament consists of 2 fixed torpedo tubes in the bow, and a third tube mounted on a turn-table aft. There are also 3 R. F. guns and 4 Gatlings mounted on deck and conning tower. The boat is lighted by electricity.

DENMARK.

The Danish fleet has been increased by two 124-foot Thornycrofts, with a speed of 23 knots; displacement, 85 tons. They are both fitted with Thornycroft's new type of boiler.

Fourteen first-class and fourteen second-class boats are to be built.

ENGLAND.

During the year 1887–'88, all the first-class torpedo-boats (twenty in number, from 125 feet to 150 feet in length) have been completed, and a considerable amount of experience has been obtained with boats of various types on actual service. At the close of 1887–'88 (March 31) there were completed eighty first-class torpedo-boats, and sixty-three second-class boats, of which latter twelve are built of wood and fifty-one of steel. It is contemplated to order six first-class torpedo-boats and ten second-class boats in 1888–'89.

The decision of the Board of Admiralty of last year, by which it determined to discontinue the building of torpedo-boats for sea-going purposes and substitute vessels of a much larger displacement, was amply justified by the experiments of the past year.

White, of Cowes, is building an experimental twin-screw sea-going torpedo catcher, on his turnabout plan. The general dimensions are, length, 200 feet; displacement, 300 tons; minimum speed to be 22 knots when fully loaded.

The Indian Government has ordered three Thornycroft and three White boats, 125 feet in length. These boats are to be built under Admiralty supervision.

The Abercorn Ship-Building Company is building a torpedo-boat for the harbor defense of Calcutta; length, 130 feet; I. H. P., 900; speed, 23 knots.

A deep-sea torpedo-boat, called the *Buona Ventura*, has been completed by Ernest Scott & Co., Newcastle-on-Tyne, and is for sale by the Defence Vessel Construction

Company. The dimensions are as follows: Length, 182 feet; beam, 20 feet; draught, 7 feet 6 inches. It has a steel bullet-proof superstructure, twin screws, triple-expansion engines, and steam steering gear. The armament consists of R. F. 6 pounders and machine guns, and four torpedo tubes.

An excellent type of second-class boat to be carried on board ship has recently been completed by Yarrow. It is of the following dimensions: Length, 60 feet; beam, 8 feet 3 inches; lifting weight, 11¼ tons without stores or outfit; loaded displacement, 15 tons. The engines are triple expansion, indicating nearly 250 H. P. The armament consists of a revolving torpedo gun carried aft. The torpedo is ejected by gunpowder, fired by an electric connection to the conning tower. A two-barreled Nordenfelt gun is also carried. The torpedo gun can be unshipped and a R. F. gun put in its place if required to act as a gun-boat. On trial October, 1887, six runs over the measured mile gave this boat a mean speed of 17.147 knots, with 507 revolutions; on a subsequent four hours' continuous trial, fully loaded, aspeed of 17 knots was realized, without the engines being stopped during the trial. Yarrow guaranties 17 knots with a load of two tons. The boat without its armament is very suitable for the ordinary service of the ship. This type of second-class boat has been adopted for the English navy.

Another type of second class boat has also been completed for the Admiralty by Messrs. Yarrow & Co. The new type is somewhat smaller, being 56 feet in length by 8 feet 3 inches beam, and has a displacement of 10 tons light, and 14 tons loaded. The speed is 16 knots, and the armament the same as for the 60-foot boat. The object of the Government in ordering this boat is to compare her performances and efficiency with those of the larger boat.

Twenty-four first-class torpedo-boats under the command of Commander Long, R. N., with the torpedo vessel *Rattlesnake* as flagship, took part in the evolutions during May, 1887. They were of the following types: Sixteen Thornycroft, four Yarrow, and four White.

During this evolutionary cruise eleven boats, all Thornycrofts, came to grief. Three men were killed on board No. 47 by a boiler explosion, while a similar accident almost occurred to No. 57.

On the morning of May 24, twenty-two boats started for a 50-mile race down the Channel and back. The squadron was composed of fifteen Thornycrofts, four Whites, and three Yarrows. There was a heavy swell on during a greater part of the run. Only fifteen boats finished, the race being won by No. 31 (Yarrow) with No. 35 (White) only five seconds behind. It was during this race the fatal accident occurred on board No. 47. The weather throughout the evolutions was boisterous, and many of the officers and men were entirely new to the work. The numerous small accidents which occurred at first emphasizes the importance of having well-trained crews thoroughly familiar with the boats.

The general opinion of the professional press as to the qualities of the different boats seemed at that time to be: The White boats are good all-around boats; the Yarrows, the speediest and wettest, and the Thornycrofts the handiest and weakest.

FRANCE.

Nine torpedo boats of the deep-sea class, eighteen first-class, forty-one second-class, and nine videttes should have been completed at the end of 1887. This programme has not been carried out; only five of the deep-sea class have been completed, while the others are undergoing alterations. The videttes, by reason of two having been rejected, number five; the effective number of the second-class has not changed. The loss of No. 67 reduced for the time the number of first-class boats to seventeen, but three new ones have since been completed, making twenty in all. By the programme of last year the number of first-class boats should have been increased by thirty, but

from many required alterations and various causes it is not expected to complete these until the current year.

M. Barbey, the immediate successor to Admiral Aube as Minister of Marine, did not agree with the latter's announced idea that "the microbe should destroy the giant." He is quoted as saying, "He regards torpedo-boats as of service for coast defense, and will renew the building of armor-clads as soon as money is available." He also said in speaking of the 35-metre boats: "The present type has marked defects, they can not keep the sea, and they lack coal capacity; we are studying a deep-sea boat of the *Balny* type of 41 metres; if it fulfills our expectations we will make it the only type of deep-sea boat."

Admiral Lafont and Brown, speaking before the budget committee, are reported to have stated that the torpedo-boats are undoubtedly excellent, but experiments at sea are necessary to prove their utility in naval engagements; they have no doubt the present type is too small.

The deep-sea torpedo-boat *Ouragan* described in No. VI, page 339, made the voyage during June last from Nantes to Toulon in six days and four hours, an average sea speed of 12 knots per hour. She encountered heavy weather in the Gulf of Lyons. Leaving with her bunkers full of coal and fully loaded, she reached Toulon in good condition with 8 tons of coal on board. Speed trials took place off Toulon and are said to have been very satisfactory (Yacht, March 31); without forcing the fires the boat realized a mean speed of 19.5 knots, with 305 revolutions. The engines are designed to make 400 revolutions when running at full speed. The Ateliers de la Loire are building five more boats similar to the *Ouragan*, which will be taken by the French Government if the *Ouragan* proves a success. The latest accounts state that the *Ouragan* has not yet succeeded in making her contract speed, and that her acceptance is dependent on the success of further trials.

Normand, of Havre, is building for the Government a twin-screw torpedo-boat, of the following dimensions: Length, 137 feet 10 inches; beam, 14 feet 8 inches; displacement, 119.5 tons; speed, 20½ knots. The hull will be of steel, and the interior will be divided into eleven water-tight compartments. Two independent locomotive boilers will furnish steam for compound engines driving twins screws. The full endurance is to be 2,000 miles at 10 knots. Besides the torpedo tubes, a torpedo spar will be fitted.

Much trouble has been experienced with the boilers of French torpedo-boats, and with the smaller types of boats. In their effort to obtain the best type of deep-sea boat, and the best type of boiler, the Government, attracted by the success of the *Ariete*, has ordered from Thornycroft a similar boat, the *Coureur*.

The *Coureur*, twin-screw, classed as an *éclaireur-torpilleur* (torpedo-boat scout), was launched at Chiswick June 13. Her dimensions are: Length, 147 feet 6 inches; beam, 14 feet 6 inches. The hull is of steel, and is divided into twelve compartments. The two boilers are of Thornycroft's patent tubulous system. It is claimed that boilers of this design can supply steam at a pressure of 200 pounds per square inch with immunity from leakage and priming; besides, they are lighter and smaller than the locomotive type. The *Coureur* is fitted with Thornycroft's patent double rudder, she is to make 26 knots and the trials are to take place in France. The armament consists of two bow tubes for discharging Whiteheads and four 47-millimetre Hotchkiss guns.

The *Gabriel Charmes*, described in No. VI, page 259, having proved a total failure as a gun-boat, has been altered into a torpedo-boat.

First-class torpedo-boat No. 71, which had gone by sea to Toulon, was transported by rail to its port, Cherbourg, during August, 1887. The special train which carried the torpedo-boat consisted of three carriages of the first, second, and third classes, two freight cars for the armament, two freight cars for the stores and outfit, and a specially-constructed carriage with special trucks for the boat itself. The boat measured 108 feet in length, 9 feet in depth, and weighed 38 tons. The train reached Cherbourg in four days. Its speed varied from 15.5 to 18.5 miles per hour, and

it stopped at night at the stations en route. Special precautions were taken that the boat should not be injured in transit. (See pp. 289 to 293.)

Torpedo-boat docks.—Twelve small floating docks are to be constructed especially for docking torpedo-boats. They will be of two sizes: the larger, length 118 feet, breadth 39 feet 4 inches, depth 14 feet 8 inches; the smaller, length 98 feet 5 inches, breadth 24 feet 7 inches, depth 12 feet 7 inches. They will be rectangular in shape, made of steel 3 to 4 millimetre (.118 inch) in thickness. The length of the dock can be increased by means of projecting aprons, strongly supported and so arranged as to extend at either end of the dock floor.

The largest sized torpedo-boats can thus be lifted. An ingenious system of piping will be fitted, which can be connected if desired with pumps established on shore. These docks will be distributed among the different ports.

It is stated that an invention of Mr. Oriolle, of Nantes, for rendering the approach of torpedo-boats invisible at night has met with success experimentally. The flames and sparks disappear, and the smoke, which is cooled from 100° to 30° C., spreads horizontally over the surface of the water. This smoke envelopes the torpedo-boat in a dense mist, which even the electric light is unable to penetrate, as has been shown by experiment. At the same time there is no variation in the normal steaming conditions. Steam is maintained at the required pressure, and the speed of the boat is not diminished. The change which the products of combustion undergo is effected in the smoke-stack, and the additional weight of the apparatus is said to be inconsiderable. It is reported that this improvement is being introduced in the torpedo fleet of France, and that Italy and Spain have resolved upon its adoption.

GERMANY.

The two division boats described in Gen. Inf. Series No. VI, page 339, have been completed and tried. On a special eight hours' trial against a heavy sea and wind, force 8, they realized a mean speed of 18 knots without any excessive vibration or movement. The boats were fully loaded and carried coal for 2,500 miles at 10 knots.

These trials were so satisfactory that two similar boats were ordered from the same builder, Schichau, of Elbing. These are now completed. Their dimensions are: Length, 188 feet; beam, 22 feet; draught aft, 9 feet 8 inches; displacement, 350 tons; H. P., 2,000.

After a competitive trial in 1885, Germany decided in favor of the Schichau type for first-class boats of the following dimensions: Length, 121 feet 3 inches; beam, 15 feet 7 inches; displacement, 85 tons. The engines are triple expansion, indicating 1,000 horse power, and giving a speed of 19 to 22 knots. Those first designed had an endurance of only 1,000 miles at 10 knots, the later design have an endurance of 3,500 miles. Schichau has received orders for sixty-four in all, forty-two of which are now completed.

ITALY.

Ten first-class torpedo boats were completed and delivered by Schichau during 1887, these boats steamed from Pillau, Germany, to Spezia, calling at Portland and Cadiz. The steaming time of the voyages varied from 8 days 20 hours to 8 days 22 hours. The Schichau type of boat adopted by Italy differs somewhat from that adopted by Germany. The general dimensions are: Length, 127 feet 9 inches; beam, 15 feet 7 inches; draught aft, 6 feet 8 inches; displacement, 90 tons; I. H. P., 1,000. The trial speed has been 22.5 to 23 knots. The trials of these boats proved so satisfactory that ten more of the same type were ordered, five of them to make 26.5 knots for an hour's run, and five others to make 23 knots for an hour's run. These boats serve as

models for the Italian builders, who are now constructing twenty-nine more of this type, to be completed in 1888; all the materials of these are to be of Italian origin.

Four Thornycroft type boats, 101 feet 7 inches in length, are building at Genoa. Two deep-sea boats, of the model of the sea-going Yarrows, described in No. VI, page 340, are building in the Venice dock-yard. White, of Cowes, England, has completed eight third-class boats with wooden hulls for Italy. They are built on his turn-about plan. Two are for the *Italia*, two for the *Lepanto*, and four for the *America*.

Orlando Bros., of Leghorn, the builders of the *Lepanto*, have recently completed a torpedo-boat called the *Fatum*, which has shown remarkable results as regards manœuvring power, steaming and steering astern. The principal dimensions are: Length, 101 feet 2 inches; breadth, 11 feet 6 inches; depth, 7 feet 8 inches; displacement, 42 tons. The hull is of galvanized steel, the rudder, stem, and stern framing of cast-steel. The conning tower is protected by steel armor of varying thickness up to 1 inch. The side armor extends aft as far as the smoke-pipes, and is so arranged that the maximum angle at which shot ahead could strike is 30°. The torpedo tubes also are protected by plating; the angle at which shots could hit this is 6°. Two ejectors are situated in the part protected by the plating, in order that the pumping may not be interrupted, in case of damage to the unprotected part.

The manœuvring power of the boat is obtained from a bow rudder and a rudder-propeller astern, worked simultaneously by steam. The rudder-propeller is connected to the main shaft by a universal joint; the rudder-head passes inside the stern, and is connected by gearing with the steam steering engine. The turning circle has a diameter of 150 feet, and is accomplished in from sixty to sixty-five seconds. The boat steers as easily going astern as ahead. It is intended to approach the enemy bows on, fire the torpedo, and back off, trusting to the armor plating, which rises to such a height as to protect the vital parts. The speed attained is 19 knots going ahead and 15 or 16 knots going astern. The stern lines are very fine, so that in steaming full speed astern in a heavy sea very little water is shipped on deck. There are two sets of compound engines, each of which has the cranks at 180°, one steam valve being used for both cylinders. The cranks of one set of engines are at right angles to those of the other. The diameter of the high-pressure cylinder is 10¾ inches, of low-pressure 17$\frac{17}{32}$ inches; piston stroke, 10¼ inches. The circulation in the condenser is effected by a circulating pump placed longitudinally in the boat, and worked by an independent engine, which also works the air and feed pumps. In case of damage to the auxiliary engine the natural induction due to the speed can be substituted for the effect of the circulating pump, and the engine kept going at a moderate speed. The boilers are of the locomotive type, and have a special arrangement to prevent leakage in the tube plates. The heating surface is 828 square feet, and the working pressure 140 pounds. I. H. P., 450 to 500. The armament in addition to the torpedo tubes consists of two Nordenfelt machine guns placed on each side near the conning tower, with fire ahead and astern.

JAPAN.

Seventeen first-class torpedo-boats are to be built for the Japanese navy; seven to be constructed at Kobe, Japan, and ten at le Creusot, France, by Messrs. Schneider.

RUSSIA.

With the exception of some five or six first-class boats ordered in Russia, there have been no additions to the Russian torpedo-boat fleet during the year.

The *Jenciche* of the Schichau type, length 128 feet, speed 19 knots, endurance 2,000 miles, has been completed for the harbor defense of Vladivostock.

The Russian Minister of Marine has recently ordered the boilers of twelve first-class torpedo-boats to be fitted for burning liquid fuel.

A very interesting series of competitive trials of the different types of Russian torpedo-boats took place in the Baltic September last, in order to determine the best type of torpedo-boat. A commission, presided over by Vice-Admiral Pilkin. was ordered to conduct a series of competitive trials.

The torpedo-boats tried were four in number:

(1) The *Sveaborg*, built by Normand, of Havre, France, November, 1886: Length, 152 feet 4 inches; beam, 12 feet 4 inches; trial displacement, 95 tons, with 14 tons of coal; compound engines, indicating 780 H. P., with 284 revolutions; single screw; original trial speed, 19.7 knots.

(2) The *Vindava*, built by Schichau, Elbin, Germany, 1886: Length, 128 feet; beam, 15 feet 8 inches; trial displacement, 87 tons, with 17 tons of coal; triple expansion engines, indicating 900 H. P., with 350 revolutions; single screw; original trial speed, 21 knots.

(3) The *Wiborg*, built by Thomson, Glasgow, Scotland, January, 1887: Length, 144 feet 6 inches; beam, 17 feet; trial displacement, 140 tons, with 14 tons of coal; double compound engines, indicating 1,405 H. P. with 395 revolutions; twin screws; original trial speed 20 knots.

(4) The *Kotline*, built at St. Petersburg dock-yard in 1885: Length, 124 feet 3 inches; beam, 12 feet 10 inches; compound engines, indicating 500 H. P., twin screws. A fifth boat, the *Lachta*, was to have taken part in the trials, but was prevented by an accident to its screw.

The trials consisted of full-speed trials over the measured mile, near Cronstadt, and a run from Cronstadt to Revelstein light-house, thence to the island of Gottland, and back to Revel (during which run a heavy gale was encountered), and finally a three hours' full speed trial near Revel.* These trials took place from September 11 (o. s.) to September 16, and were held under the most diverse conditions of wind and weather. The victor in this struggle was the *Sveaborg*, built by Normand. Before commencing the trials a full supply of coal was taken on board as follows: *Wiborg*, 44 tons for 1,300 miles, at a mean speed of 12½ knots; *Sveaborg*, 30 tons for 2,800 miles, at reduced speed; *Vindava*, 18 tons, for 1,000 miles, at reduced speed; and the *Kotline*, 15 tons, for 400 miles, at reduced speed. On the morning of the 11th of September (o. s.) the torpedo-boats left the middle port of Cronstadt, and having fallen in with the steamer *Iljin*, which brought the commission from St. Petersburg, commenced their full speed trials about 1 p. m. The commission boarded each in turn, and each boat ran three times over the measured mile. Indicator diagrams were taken at the end of each run. As in the trials which afterwards took place near Revel, the greatest speed was realized by the *Sveaborg*, and was only one knot less than on her original trial, in spite of a load three times greater. For the *Wiborg* and *Vindava* the loss of speed was 5 knots, and the *Kotline* 2½ knots. About 10 p. m. all the boats, in company with the cruiser *Asia*, went to the Revelstein light-house, where, after having run a given distance at sea, they were to return and submit themselves to the final speed trial under the most unfavorable circumstances, regarding the condition of the boilers and engines. The distance as far as Gottland was easily made, the wind being N. E., force 5. A little before 3 a. m., the 12th, the wind commenced to increase and soon became a gale, the sea rising in a most remarkable manner. The *Vindava* could no longer stand the bad weather, and was forced to anchor under the lee of Gottland. The other boats continued on, but not having the same speed soon parted company, the *Sveaborg* taking the lead, followed by the *Wiborg* and *Kotline*, which kept together. By the morning of the 12th there was a full gale from the N. E., increasing until it reached a force of 10, with haze and mist becoming so thick as to render the coast invisible even at a short distance. The *Wiborg* and *Kotline* having made out the island of Nargen right ahead were obliged to stand off shore in order to double the northern end of the island. A slight accident to the *Kotline* at this time obliged her to proceed with one screw only. After having successfully

* The account of the trials was published in Russian official journals.

rounded the Nargen light-house, the two boats anchored, entirely protected from the wind. The *Sveaborg* was obliged to lie to for two hours south of Voulf Island, but reached the port of Revel about 2 p.m. The other boats reached Revel the following day, the 13th instant. The cruiser *Asia* was compelled to remain at the island of Nargen on account of the fog. To show the force of the gale encountered by the torpedo-boats: two English steamers were towed into the port of Revel at this time with their steering gear broken and the engines disabled; the captains declaring they had encountered a very heavy storm. The crews of the torpedo-boats being utterly worn out, and in need of rest, Admiral Pilkin ordered the following day be devoted to rest and to putting the boats in order.

At 6 a. m., the 15th of September, the torpedo-boats left the port of Revel with a smooth sea, and ran to Biorksund. In order to avoid confusion and interference they were divided into two groups; the *Sveaborg* and *Vindava* forming one, the *Wiborg* and *Kotline* the other. The former took the lead, the *Vindara* arriving first at the island of Rivitza.

The final full speed trials were made on the morning of the 16th of September. The *Wiborg* and *Sveaborg* carried 15 tons of coal each; the amount carried by the *Vindava* is unknown (the total bunker capacity is 18 tons). The *Sveaborg* developed a speed of 19.7 knots, equal to her original trial speed; the *Vindava* 17 knots, a loss of 4 knots; and the *Wiborg* 17.5 knots, a loss of 2½ knots on the original trial speed.

As the result of these trials the superiority of speed, strength of construction, and radius of action, was awarded to the Normand boat, realizing its original trial speed in Russian hands after a year's service. The fact is worthy of attention as being out of the usual rule of deterioration occurring in torpedo-boats. It might be well to remark the officers and crew of the *Sveaborg* were particularly complimented upon the fine condition of everything in their boat, and it is very probable that much of the boat's success was due to this. The commander of the *Vindava*, in speaking of her ill success, is reported to have said: While the boilers of the boat were intended to carry a pressure of 180 pounds, the Russian authorities have limited it to 160 pounds; owing to the inexperience of the firemen the maximum pressure at any time did not exceed 130 pounds. The advantages of the triple expansion engine could not be realized with this pressure of steam.

SPAIN.

The *Ariete*, which may be considered the speediest torpedo-boat yet built, was partially described in Gen. Inf. Series No. VI, page 341. The following is a full description of this remarkable vessel: Length, 147 feet 6 inches; beam, 14 feet 6 inches; draught, forward, 1 foot 9 inches, aft 4 feet 11 inches; displacement, 97 tons. She is a twin screw torpedo-boat of the deep-sea class; the hull is of steel. The interior is divided into 11 water tight compartments; all but one of the bulkheads, the torpedo room bulkhead, being carried up to the deck; the torpedo-room bulkhead has its top well above the water line. The form of the vessel is carried aft very full above the water line so as to give a very round stern; the after part of the vessel is almost flat. There are double rudders, one outside of each screw, worked by a steering engine in the after compartment. These rudders are Mr. Thornycroft's special design. The interior of the boat is lighted with twenty-three incandescent lights. A Mangin projector search light is mounted on the bridge on a traversing slide. There are fifteen bilge ejectors, each capable of discharging 35 tons per hour, and two donkey-pumps each throwing 1,250 gallons per hour. The boilers are Thornycroft's new type; the engines, two-cylinder compound.

On trial July 8, 1887, a mean of six runs over the measured mile gave a mean speed of 26.003 knots, the I. H. P. being 1,600. The mean speed for a two hours' continuous trial was 24.9 knots, the displacement on trial being 97 tons. From these trials the

endurance of the *Ariete* was estimated at 2,500 miles with a consumption of 8.07 tons of coal per 1,000 miles.

The *Rayo*, sister to the *Ariete*, was tried in August, 1887, realizing a speed of 25.37 knots on the measured mile. On a two hours' continuous trial 24.63 knots were realized.

The *Halcon* and *Azor*, 134½-foot boats, built by Yarrow, described in No. VI., page 341, were tried in October, 1887, with a load of 17 tons, and a displacement of 108 tons. The *Azor* realized 24 knots for two and three-fourths hours, developing 1,550 I. H. P. The *Halcon* made 23.5 knots.

A Thornycroft boat, called the *Habana*, and built by the subscription of the merchants of Havana, for the defense of that port, has been completed and delivered. The principal dimensions are: Length, 125 feet 5 inches; beam, 12 feet 3 inches; draught, aft. 3 feet 6 inches; displacement, 59 tons, fully loaded. The engines are compound, indicating 730 H. P. On trial with a displacement of 40 tons, she realized, a speed of 21 knots. While steaming across the Bay of Biscay on April 5, 1888, the sea being smooth, the steam pressure 100 lbs., and the revolutions 240, corresponding to a speed of 12 knots, an accident happened to her boiler which was fatal to four, perhaps five, of her crew and necessitated towing her into port. Two theories were advanced to account for the accident: one, insufficient strength of stays; the other, that the 9½-millimetre crown-sheet collapsed, and the threaded ends of the stays connecting the crown-sheet with the upper part of the boiler pulled through, giving the water and steam access to the furnace.

The *Ejercito*, built by the subscriptions of the Spanish army, and presented to the navy, was completed November 30, 1887. The general dimensions are: Length, 111 feet 6 inches; displacement, 60 tons. The engines are triple expansion, and the speed 18 knots.

The Spanish Government have decided to build four boats of the *Ariete* type, and twenty others of 60 tons each.

TURKEY.

The Germania Company, at Gaarden near Kiel, are building the following torpedo-boats for Turkey. They are referred to in No. VI, page 341.

The Germania Company are also building a torpedo-boat catcher of 230 tons; length, 187 foot; beam, 21 feet 7 in ches; the I. H. P. to be 2,000, and speed 20 knots. The armament will consist of 2 bow tubes, 4 torpedoes, and 6 H. R. C. The same company has an order from the Turkish Government for a torpedo dispatch boat of 120 tons displacement. Length, 141 feet; beam, 19 feet. The engines are to indicate 1,800 H. P., with a speed of 23 to 24 knots. The armament will consist of 2 bow tubes, 4 torpedoes, and 5 or 6 H. R. C.

All of the above-mentioned boats are to be fitted with triple-expansion engines and locomotive boilers, working at 180 pounds pressure.

Nine boats of 85 tons, Schichau model of the following dimensions are building: Length, 128 feet; beam, 15 feet 7 inches; draught, aft, 6 feet 2 inches. The I. H. P. is to be 1,200, and speed 21.5 knots. The armament will consist of 2 launching tubes, 4 torpedoes, and 2 H. R. C. One of these boats on trial during September, 1887, realized a speed of 21.5 knots for an hour's run, and carried a weight of iron equal to her armament, 8 tons of coal, and 21 persons.

UNITED STATES.

The *Stiletto*, described in No. VI, page 134, had her final official trials in Narragansett Bay on August 20, 1887. The trials consisted of a three hours' run over a measured distance. The weather was very favorable, sea smooth, and no wind. The total weight carried was 9 tons, 640 pounds, which included 4 tons, 540 pounds of coal. The displacement with this load was 31 tons. Draught of water before trial, forward,

2 feet 9 inches; aft, 2 feet 10 inches. After the trial the draught forward was 2 feet 7 inches, and aft 2 feet 8 inches. The mean speed for the three hours' run was 18.22 knots. The vibration at high speed was moderate. A navy compass was quite steady wherever placed. The mean I. H. P. developed by the engines was 359. The endurance with 5 tons of coal is computed 517 miles at a speed of 11 knots.

The *Stiletto* was bought by the U. S. Government for $25,000, and turned over to the Torpedo Station on May 28, 1888.

Torpedo-boat No. 1.—Messrs. Herreshoff, of Bristol, R. I., have signed a contract March 1, 1888, to build for the U. S. Navy a deep-sea twin screw torpedo-boat, exclusive of torpedoes and their appendages for $82,750, of the following dimensions: Length over all, 138 feet; length on deck, 134 feet; extreme breadth, 15 feet; extreme depth, keel to crown of deck amidships, 10 feet. The keel will be rocker-shaped, the draught aft 4 feet 8 inches. The displacement will be about 100 tons and the H. P. is estimated at 1,600. The engines are to be five-cylinder quadruple expansion driving twin screws. The two boilers are to be of Herreshoff's latest design, and placed in separate compartments forward and abaft the engine-room. Eight bilge ejectors will give a total discharge of 280 tons per hour. A steam steering engine will be fitted to work a balance rudder of large area. The engines and boilers will be protected by coal. The interior will be divided into eleven watertight compartments and lighted by electricity. There will be two conning towers, one forward and one aft, with a search light on each. The armament is to consist of two bow torpedo tubes, a torpedo gun aft, and three 37-pounder R. F. guns.

A weight of 15 tons is to be carried on trial, which will be a three hours' continuous run. If on a three hours' trial the mean speed of the boat exceeds 22 knots a premium of $1,500 will be paid, provided the boat is accepted by the Department, for each quarter of a knot in excess of 23 knots, and $2,000 for each quarter of a knot in excess of 24 knots. If the speed of the three hours' trial calculated as aforesaid falls below 22 knots a penalty of $4,000 will be exacted. If the speed on trial falls below 20 knots the Department reserves the right to reject the boat. The contract calls for the completion of the boat in fifteen months.

SUBMARINE BOATS.

[Circular issued by the U. S. Navy Department November 26, 1887, showing the general requirements to be fulfilled in the design and trial of a steel submarine torpedo-boat for the U. S. Navy.]

The design for a submarine or diving boat to be acceptable to the Department should show the manner in which it is proposed the vessel shall be manœuvred under all conditions, but more especially how she is to be brought into action from a distance.

The most desirable qualities to be possessed by such a vessel while approaching a hostile ship underway, are speed, certainty of direction, invisibility, and safety from the enemy's fire; the design and description should plainly show the amount of each of these qualities that the boat will possess, and the advantage that results from diminishing any one for the purpose of increasing any other.

The Department has no knowledge of any method by which certainty of approach to an object constantly moving and constantly changing its direction of motion can be secured, unless the object is kept constantly in view or lost sight of for brief intervals only; consequently, if no novel method for insuring certainty of approach (when submerged) be devised, a design showing, at the expense of invisibility, great speed for use outside the range of effective hostile fire would be desirable; providing always that submergence to a safety depth can be quickly secured, and certainty of approach still be retained when coming within the danger zone. Within the danger zone a part of the speed of approach may be given up for the sake of obtaining water cover, provided certainty of approach can be still maintained until the object of attack is so near that this certainty is virtually secure even when the boat is deeply submerged for the purpose of obtaining total invisibility or for delivering the attack at a vulnerable point.

The following definitions are adopted for convenience in describing the conditions under which submarine boats generally move:

"Surface," *i. e.*, with freeboard or awash.

"Covered," *i. e.*, protected by at least 3 feet of water over the highest point of the shell, not necessarily cut off from connection with the atmosphere, and furnishing a view of the object of attack through air.

"Submerged," *i. e.*, at any safe depth, cut off from communication with the atmosphere, and affording no view of the object of attack other than one through water.

Any boat not designed for running "submerged" can not be considered submarine; and she should be able to run in at least one of the other ways mentioned in order to be satisfactorily effective.

The features essential to the usefulness of a submarine boat designed for offensive warlike purposes are in general terms held to be:

Great safety, facility and certainty of action when "submerged," fair speed when "covered," good speed when running on the "surface," a fair endurance of power and stores, great ease of manœuvring under all conditions, sufficient stability, great structural strength, and fair power of offense.

The Department would particularize as to these qualities about as follows:

I. *Speed.*—The boat should be capable of making at least 15 knots per hour when running on the "surface," and at least 12 knots per hour when running "covered." When running "submerged" she should have a mean speed of at least 8 knots per hour.

II. *Power endurance.*—She should be able to run for about thirty hours at full power, on the surface or "covered," while at the same time she should maintain at its great-

est efficiency the power that is to be used for "submerged" running. When "submerged" she should be capable of running at least two hours at 8 knots mean speed. If intended for "covered, and "submerged" work *only* (without using air draught), she should be capable of running in that condition about thirty hours at full power.

She should carry about ninety hours' provisions and water for the crew.

III. *Ease of manœuvring.*—When running on the surface, "covered" or "submerged," the boat should be able, when working at full power, to turn in a circle of a diameter not greater than four times her length, and this without reversing her engines.

If designed to run part of the time on the surface, she should be able to pass from the surface to the covered plane in thirty seconds.

When below the surface she should be able to make very quickly a minimum change of 10 degrees in direction in the vertical plane.

The conditions necessary for furnishing power for "submerged" must at *all* times during the working endurance be maintained at their maximum efficiency and ready for *instant use* until the first "submerged" run is commenced. After the boat has again made communication with the air the time of renewing that part of the power that was used while "submerged," or rearranging the conditions for submerged running, which were altered during the submergence, should not be longer than twice the period of the submerged run.

While lying still the boat must be able to maintain any desired depth within the limits of safety from crushing pressure upon the shell. It is not considered that this requirement can be fulfilled simply by varying the specific gravity of the boat.

IV. *Stability.*—This quality must be possessed in good measure when the boat is on the "surface;" and when "covered" or "submerged" the stability must in great part depend upon "normal buoyancy"—*i. e.*, a certain amount of buoyancy normally remaining in the boat and never given up, unless it should be necessary to sacrifice buoyancy in order to sink from under an obstruction or to lie upon the bottom for the purpose of conserving power.

The amount of this normal buoyancy and consequent stability must be sufficient to allow the necessary movement of the crew in working the machinery and torpedo appliances while the boat is "submerged" and lying still, but not on the bottom; and it is thought this amount of buoyancy will be more than sufficient for the purpose of successful and convenient navigation when the boat is "submerged" and moving at moderate speeds.

V. *Structural strength.*—The shell should be sufficiently strong to withstand an exterior water-pressure, due to a submergence, of at least 150 feet.

VI. *Power of offense.*—Against any part of the bottom of a ship running at speed the boat must be able to deliver, with reasonable certainty, torpedoes carrying charges equal in minimum effect to 100 pounds of gun-cotton. The mode in which this requirement is to be met is left entirely to the designer; but it is to be remarked that the method which gives the greatest under-water range, with accuracy, will be preferred. Rapidity of rate of delivery, extension of angle through which torpedoes can be delivered, number of torpedoes that can be carried, and effective over-water delivery are all important factors for determining the power of offense.

Besides the foregoing principal requirements, the boat must be provided with means for: Enabling the commander to see the object of attack when running "covered," and an all-around view should also be provided if practicable; compensating or otherwise insuring the accuracy of the compass, when "submerged," and under all conditions; purifying the air for the crew so as to allow at least 12 hours submersion; keeping the temperature within the boat down to 100 degrees Fahr.; getting away from obstructions—above, below, or lateral; pulling out of mud; automatically preventing a dive below a predetermined depth; preventing the fouling by lines or other obstructions of any working parts exterior to the shell proper; lighting the interior, and for the escape of the crew in case of disaster.

These qualities are expected by the Department both because, in its opinion, they are necessary, and because they have already been attained with more or less success in submarine structures now extant. But as the bids are to be made upon the basis of guarantied results, bidders are at liberty, in their proposals, to modify or omit, as they may think proper, any of the qualities mentioned herein, always excepting qualities of workmanship and material used in the construction of the hull, engines, power generators, and other mechanism.

Any valuable qualities not enumerated by the Department (which limits itself to pointing out those that appear to be the most useful) will be fully considered and given due weight in deciding upon the design to be adopted.

As the Department does not define the means by which results are to be attained, it will accept no responsibility as to the efficiency of the methods proposed to be used.

Designs must be accompanied by written explanations fully setting forth the operation of the boat and appendages, and stating all the advantages of the proposed vessel.

The bidder to whom the award is made will furnish detailed drawings and specifications of his boat, and the contract will be based on these. They must not differ in any important way from the general design and explanation submitted with the proposal.

Quality and workmanship.—All material is to be of the best quality, of domestic manufacture, and subject to the tests and inspection laid down in the appended instructions concerning tests to be applied to steel for use in the construction of the hull and machinery of a torpedo-boat, approved by the Secretary of the Navy July 15, 1887.

The workmanship shall be of the highest class, and subject to the inspection of officers designated for the duty. Such inspectors shall have free access to the works of the builders at all times, for the purpose of witnessing and examining the progress of the vessel and machinery, and they are to be afforded every facility and assistance for inspecting and for ascertaining that the work is done in accordance with the terms of the contract.

General remarks.—Conditions will be inserted in the contract requiring, upon the completion of the boat, trials sufficient to test her efficient operation, and to insure that the contract has been properly performed, and that the guaranties assumed by the contractor have been complied with.

A boat rejected under the contract may have exhibited certain important qualities in a much greater degree than was contemplated by the contract, or she may embody devices and improvements novel and very valuable but not called for by the contract.

In such a case the Department might possibly be disposed to purchase the boat, but such a course will not be pursued unless the advantages to the Department are of the most obvious character.

The Department limits the maximum displacement to two hundred (200) tons when the vessel is "submerged," and it puts the displacement at so large a figure in order that designers may not be hampered in attaining good speed by lack of space for motors; but it is thought that designs showing about ninety (90) tons displacement will give the best results. No bidder is limited to the submission of a single design, but each is invited to submit as many as he may see fit. Independent drawings and explanations, and a separate proposal for building the vessel shown, must accompany each design.

The foregoing statement of "general requirements" is intended only as suggestive and as embodying for the benefit of bidders the views of the Department as to what ought to be accomplished by any person assuming to offer a plan for an effective submarine torpedo-boat; but the Department is of the opinion that results already attained justify the purchase of a submarine boat though the exact requirements of the circular may not be guarantied. Bidders are therefore invited to submit their de-

signs even though these may show qualities less desirable or less difficult to attain than those hereinbefore described: they should be careful to state what matters are guarantied.

All bids will be considered without regard to the residence of the bidder, but the boat must be of domestic manufacture.

No bid will be accepted that does not offer guaranties of results approximating to those stated in this circular, nor unless accompanied by plans justifying, in the opinion of the Department, a reasonable expectation that results guarantied will be attained.

All other bids will be rejected.

WILLIAM C. WHITNEY,
Secretary of the Navy.

Bids for submarine boats were opened on May 3. Two plans were submitted through, and the bids on them made, by W. Cramp & Sons, of Philadelphia: one of the sinking type, a reproduction of the Nordenfelt submarine boat No. 4, described on page 416; the other, of the diving type, belonging to the Nautilus Torpedo-boat Company of New York, and designed by Mr. J. P. Holland, an inventor of large experience in this field, and others.

The dimensions of this boat are: Length over all, 85 feet; greatest diameter, 10.9 feet; displacement submerged, 120 tons; displacement with compartments empty, 98 tons. The hull is to be of steel. The engine is to be of the triple expansion type, driving a single screw. The fuel to be used is petroleum.

The armament is to consist of one pneumatic submarine tube, and one 8-inch gun for use above water.

The diving is to be effected by horizontal rudders. The design contains several ingenious features that are novel in submarine boat construction.

The greatest surface speed is to be 15 knots, and the speed submerged, according to the duration of submersion, will vary from 6 to 14 knots.

THE HOVGAARD DIVING-BOAT.

The following description and plate are extracts from the paper read by Lieutenant Hovgaard, Royal Danish Navy, before the British Institution of Naval Architects, March 23, 1888.

Description of a diving-boat.—The design here described has been worked out to satisfy, as far as possible, the requirements of a circular issued last year by the United States Navy Department, inviting proposals for the construction of a steel submarine torpedo-vessel.

The circular demanded three conditions of the vessel—

(1) *Fully submerged*, where the displacement was not to exceed 200 tons, and the power endurance is to be at least two hours at 8 knots, all connection with the atmosphere being broken off.

(2) *The covered condition*, when she was to be protected by at least 3 feet of water, but at the same time have means of observing the object of attack through air.

(3) *The light condition*, or ordinary surface condition, when she was to have some freeboard, and a power endurance of at least thirty hours at 15 knots.

She was to be built of steel having a tensile strength of 60,000 pounds per square inch, and an elongation in 8 inches of not less than 25 per cent. She was to be strong enough to resist the water-pressure at the depth of 150 feet, and she was to be capable of firing torpedoes carrying at least 100 pounds of gun-cotton.

These requirements are very great, especially in view of the limitation on displacement, and it has not been possible for me to satisfy them fully.

What was said about the principal conditions to be fulfilled in the surface-boat will also hold good here, with some obvious modifications.

Since the demands of the circular as to speed and power of endurance are very great, and since the diving necessitates the introduction of extra machinery, the boat must

be much bigger than the surface-boat just described, and will in fact assume the character and size of a first-class torpedo-boat.

The covered condition has been attained by increasing the depth of the superstructure to 3 feet.

The power proposed to be used when submerged is electricity stored up in accumulators. This is preferred to stored up heat, as exemplified by the hot-water cisterns of the Nordenfeldt boats, because it gives higher speed and greater power of endurance. It need not be used at once, but may be kept in store, and will be always ready for use at any moment. If a diving-boat fitted with the hot water arrangement has to stay under water for some hours, she will become quite helpless. Electricity appears to promise more, and electric storage and propulsion will no doubt be improved every year; it is therefore natural to use it in preference to a system which seems to promise little beyond what has already been done.

On the other hand, steam must be retained as the motive power for going in the light condition; it is after all the most reliable, the most enduring, and the cheapest power we possess; it will enable the vessel not only to play the same part as an ordinary torpedo-boat, but also herself to charge the electric storage cells, and thus be more independent of communication with the shore.

For these reasons a combination of steam and electricity in diving-boats is advocated. It entails some complications, so that one of the more difficult problems connected with such vessels is to simplify the machinery and avoid duplications as far as possible.

On the basis of these considerations, and the requirements of the circular, a boat of the following principal dimensions (see Plate) has been designed:

	Ft.	In.
Length over all	122	0
Extreme breadth	11	9
Depth of hull proper	9	0
Height of superstructure	3	0
Top of conning-towers above superstructure	1	3
Total depth	13	3
Draught in covered condition	12	0
Draught in light condition:		
Forward	7	7¼
Aft	8	7¼
Displacement:		
Fully immersed ... tons	196	
Covered ... a few cwts. less.		
Light conditions ... tons	171	

The distribution of weights is as follows:

	Tons.
Hull	96.5
Keel strengthenings	6.5
Steam machinery with water	24.5
Electric machinery	3.5
Coal	8
Accumulators	19
Torpedoes and gear	6
Various fittings	2.5
Stores	1
Crew and gear	1.5
Water ballast	25
Water constantly carried (in screw well, etc.,)	2
Displacement when fully submerged	196

In the fully submerged condition a small amount of reserve buoyancy is retained, the immersion being effected by means of a small propeller, placed amidships and capable of giving a vertical thrust.

When this propeller is stopped, the boat will place herself in the covered condition, *i. e.*, with the top of the superstructure just in the water-line, and the conning-towers out of water, the superstructure being filled with water.

When the water ballast, normally 25 tons, is pumped out, she will gain 4 feet freeboard, and will trim 12 inches lighter forward. The water will have run out of the superstructure through doors placed as low as possible, and if these doors be now closed water-tight, the vessel will at once obtain considerable reserve buoyancy. This is the light condition.

The advantages of the superstructure are even more marked here than in the surface boat, on account of the greater strength required and the need for the hull proper to be absolutely water-tight, and it becomes almost a necessity if the conditions demanded by the circular are to be complied with.

The shape of the hull has been settled by the requirements as to head-room, seaworthiness, and stability. The bottom has been made ship-shape. The lines are made rather full forward, in order to secure steady motion.

The strength of the structure to resist the external water pressures is exceedingly difficult to calculate, and all that can be done is to consider the worst cases, take the most unfavorable view of them, and then use a reasonable factor of safety.

There are two ways in which the structure can give way as a whole, namely, by crushing and bulging due to the longitudinal pressures, and by crushing and bulging due to the transverse pressures of the water.

But, besides, we have to consider the local strength, namely, that of the plating between consecutive frames and that of individual frames, especially where the surface of the hull has little curvature, and where the supports are far apart.

The scantlings adopted are as follows: Shell plating $\frac{4}{8}$ inch, tapering to $\frac{3}{8}$ inch at the ends. The frames are Z bars 5 inches by $3\frac{1}{2}$ inches by 3 inches by $\frac{7}{16}$ inch and 12 inches apart. The plating to be worked flush on the frames. The surplus weight, $6\frac{1}{2}$ tons, is worked into the keel construction, and mainly forward, to balance the weight of the accumulators. A pillar is placed underneath each frame that is not otherwise supported.

Using Gordon's and Fairbairn's formula for stiffness and strength, the structure as a whole was found to possess ample strength to resist a pressure of 66.7 pounds per square inch, which corresponds to 150 feet head of water.

Calculating the strength of the shell plating between adjacent frames, it was found that a stress of 4.5 tons per square inch is set up. Where the plating is only $\frac{3}{8}$ inch thick this stress will be increased to about 12.5 tons per square inch. The plating has been treated as made up of longitudinal strips, unsupported by adjacent strips, and fixed on to the frames.

In calculating the strength of individual frames, they have been regarded as being built up of several pieces between the points of support, such as pillars and longitudinals, and the adjacent shell-plating has been taken to form part of them. Moreover, the boat has been so designed that the plating is seldom unsupported for more than 5 feet. The frames have for these lengths been regarded as straight and loaded uniformly by the water-pressures. On these assumptions the maximum stress was found to be 15 tons per square inch. The limit of elasticity in tension of the steel required by the circular will be about 15 tons per square inch, but it must be remembered that the material is considerably stronger in bending than in tension, and that as a matter of fact the frames are nowhere straight for a length of 5 feet. Moreover, the support given by adjacent frames has been entirely neglected. I would not, however, consider this boat safe beyond a depth of 100 feet.

The frames have been put very close together, as it is thought better, for the sake of stiffness, to use a great number of light and deep frames, rather than a few heavy

ones. The advantage of this has been borne out by the theoretical investigations, which further point to the necessity of an efficient system of pillaring.

Above the boiler and engine special covers are fitted, which may be readily removed, so that the boiler may be taken out for repair and the cylinder covers removed; they have been raised a little above the hull proper, but are specially protected by thicker plates. A similar cover or door is fitted on the forward conning-tower for shipping the torpedoes.

In view of the great difficulties in keeping a proper look-out, two conning-towers are fitted. They are of 1-inch plating. The after conning-tower contains the wheel for steering in a vertical direction; the forward conning-tower contains the ordinary steering-wheel, the engine-telegraph, compass, and speaking-tubes to all important compartments.

All steering is by hand-power only.

The total capacity of the water-ballast tanks is 31 tons, but the normal quantity carried when submerged is 25 tons; this is with 8 tons of coal in the bunkers. The center of gravity of the water-ballast is placed well forward. The water is admitted into the tanks through several sluice-valves, so big that the tanks will be filled in about half a minute. The water may be pumped out by electric power in little more than half an hour, by steam in twenty minutes, and by hand in two hours.

The steam-engine is a vertical compound surface-condensing engine, capable of developing 600 I. H. P. at 315 revolutions, with a boiler-pressure of 125 pounds.

The boiler is of the ordinary locomotive type of torpedo-boat boiler. Both ventilator and funnel are fitted so as to be removed and stowed away inside the superstructure.

The length of the propeller shafting just aft of the main engine carries a big pulley for the transmission of electric power. This pulley is connected with the shaft by a friction coupling. It is so arranged that this part of the shaft may be readily disconnected at both ends.

The coal bunkers hold altogether 13½ tons of coal, of which the greater portion is placed around the center of buoyancy. The speed at full power is about 14 knots, in the light condition; and the power of endurance nineteen hours, reckoning 1,600 pounds of coal per hour. This gives a distance steamed of 250 knots, at full power.

The steam power is to be used in the light condition only.

Abaft the main engine is placed an electric motor, of the Victoria type, capable of developing about 35 horse-power on the shaft when running at 600 revolutions. It is then calculated to work with a current of 245 ampères, and with an electro-motive force of 128 volts. This assumes an efficiency of the motor of 85 per cent.

The speed of the motor has to be geared down about five times to suit the speed of the propeller. This is done by means of belting, which necessitates the introduction of an auxiliary shaft in the top of the engine-room. The latter shaft may be made to work two pumps, to be resorted to when steam power is no longer available. The big pulley on the main shaft then rides loose. Against a head of 150 feet of water it will deliver about 45 tons per hour.

The electric motor is also to be used as a dynamo for charging the storage cells. In that case the propeller and pumps are disconnected, and the main engine drives the motor.

The motors derive their electricity from a number of cells of the type 31 S of the Electric Power Storage Company. These have a very rapid discharge, each cell giving out 35 ampères for six hours; their E. M. F. is 2 volts. This type is especially adapted for use on board ship. The weight of each cell is 79 pounds.

The total number of cells is 540, of which the main part 490 are placed on shelves in a separate room, which must be especially protected from the effect of acid.

The electric power is to be used in the covered and the submerged conditions.

At full electric power the vessel will be driven at a speed of about 5½ knots; and the endurance of the cells being six hours, at the maximum rate of discharge, we get a distance of 33 knots under water.

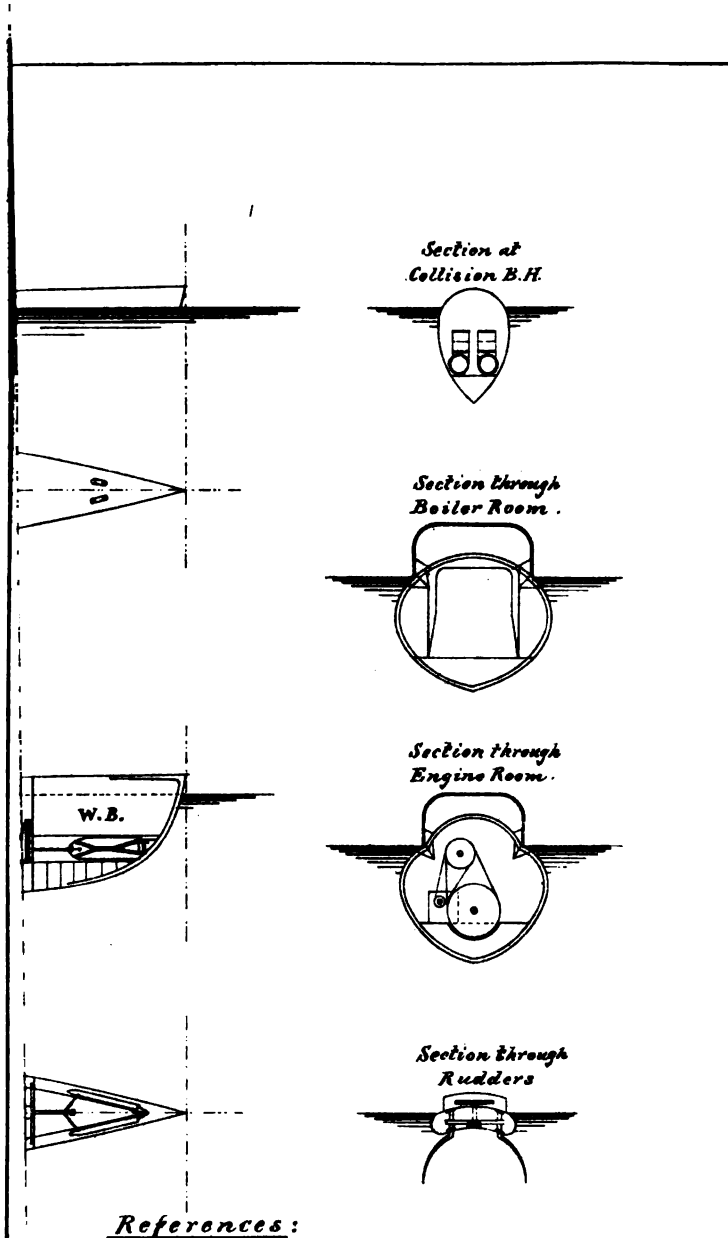

References:

G- - Steam Engine.
H- - Fresh Water.
I- - Accumulators
K- - Electric Motor
L- - Central Propeller
M- - Air Compressing Pumps.

The steering in a horizontal plane is effected by two rudders, arranged as in the surface boat. The rudder for steering in a vertical direction is placed right aft, and has been given the shape of a fish-tail, in order to bring the centre of gravity of its area as far aft as possible. It is not to be worked automatically, but by a man, whose only duty will be to keep the vessel strictly horizontal.

All movements up and down, but especially downwards, should be brought about by means of the small central propeller, placed near the centre of buoyancy, in a vertical well going right through the vessel.

This propeller is worked by a 5 H. P. electric motor, whose brushes are so adjusted that the motor will reverse by a reversion of the current. The reversion is to be effected automatically through the action of the water-pressures on a reversing switch, the instrument being so adjusted that the reversion takes place at a certain desired depth of immersion. Thus the propeller, which has at first moved so as to force the ship downwards, overcoming the small reserve buoyancy, will, at the desired depth, stop and reverse.

It might happen that the reserve buoyancy was destroyed, for instance, by a small leakage; there must, therefore, be some automatical way of establishing it again.

To attain this end, the motor which drives the central propeller is also made to drive a pump of very small diameter, but only when the propeller is working upwards. Its action is to be very slow, and will only produce an appreciable amount of buoyancy if the vessel repeatedly goes beyond the desired depth. The details of this arrangement can, however, only be settled by experiment.

It is seen that the central propeller has to effect all changes in depth of immersion, and also to keep the vessel automatically at the desired depth. Experience has shown this to be the safest method. Only when rapid changes in depth become necessary should the horizontal rudder be used for this purpose.

In the light condition the transverse metacentric height is 0.65 foot, and there is nearly 4 feet freeboard; the longitudinal metacentric height is 133 feet.

Gradually as the water is let into the tanks, the vessel sinks down and B. M. diminishes; but at the same time the centre of gravity goes down and the centre of buoyancy goes up, until the moment the boat is totally submerged, when B. and M. coincide. The metacentric height is then 0.73 foot, and this is transversely as well as longitudinally, so that the stability of the vessel is now that of a pendulum 0.73 foot long and of 196 tons weight. The curve of stability is a curve of sines, and the vessel is stable all round.

Any movement of weights inside the vessel will produce inclinations in the direction of the movement, but considerable changes in the distribution of weights must take place in order to produce any sensible inclination.

In the covered condition the stability is greatly increased by the superstructure, which has then its deck just in the surface; but it is likely that vertical or "dipping" motions will be produced in a seaway.

Forward in the vessel is the torpedo-room, where two torpedo-tube boxes are fitted, containing two 19 foot 16-inch Whitehead torpedoes, each carrying a charge of at least 100 pounds of gun-cotton. The boxes are similar to those in the surface-boat. The torpedoes are expelled by compressed air. The torpedo gear and appurtenances will be generally those of a first-class torpedo-boat.

In the light condition the air required for the boiler is drawn, as usual, by means of a fan, and pipes leading from the stokehold to the engine-room and torpedo-room supply these compartments with fresh air. The opening in these pipes must be so narrow that the pressure in the stokehold is not materially affected.

When submerged the air is kept fresh by taking away the carbonic acid produced by exhalation and adding oxygen to replace that consumed.

The carbonic acid is got rid of by pumping the air through a solution of caustic soda; about 300 pounds would do for twelve hours for the crew of this boat. The fan which has to pump the air through the soda solution and keep up the circulation is

placed right aft, and is driven by a one H. P. electric motor; it exhausts the air thus purified right forward in the torpedo-room, where the oxygen is added. The air passes on aft through all the compartments through non-return valves. The oxygen is stored up in an accumulator under high pressure.

The vessel is to be lighted by incandescent lamps, deriving their electricity from 25 storage cells of the L type.

The anchors are stowed forward in the superstructure.

Suppose the vessel to be steaming in the light condition, as an ordinary torpedo-boat. Getting so near the enemy that there is a danger of being discovered, the funnel and ventilator are stowed away, the furnace and all openings are closed, and the doors on the sides of the superstructure are opened.

Water is admitted into the ballast tanks, until the vessel is brought down to the covered condition.

When all the steam is used, the main engine is disconnected, the electric motor is thrown into gear and set going, and the small ventilating fan is started.

When the vessel comes within the danger zone she may commence to make dives. Experience has shown that navigating under water is like navigating in a dense fog, so that the vessel must go up to the covered condition now and then, and in this condition the torpedoes must be fired.

TRIALS OF NORDENFELT'S SUBMARINE BOAT IN ENGLAND.*

The general dimensions of the English or No. 4 *Nordenfelt*,† described in No. VI, page 342, are as follows: Length, 123 feet; beam or depth, 12 feet; light displacement, 160 tons; submerged displacement, 243 tons. The engines are of 1,000 I. H. P.

As may be seen from the Plate, the form of the boat is materially changed from the cigar shape of the preceding patterns. Each side of the midship section is circular, while the sections forward and aft are oval in form, both stem and stern posts being perpendicular. With this form the boat is less liable to the dangerous and eccentric movements of the earlier models, which occurred on any sudden variation of the speed. Several unofficial trials of this boat have taken place; the last occurred on December 19 and 20, 1887, under the personal superintendence of the inventor, and in the presence of a large number of English and foreign officers.

The *Nordenfelt* was lying in the inner dock with her funnels in position, and in light trim for service as an ordinary torpedo-boat. There were no torpedoes on board. Since the last trial some alterations had been made in the valve arrangements of the machinery, whereby the inventor guaranties a speed increased to 17 knots in her surface condition. A ventilating shaft in line with the funnel had been fitted, as well as a flat deck between the cupolas, for the convenience of the crew.

The party embarked on the steamer *Alexandra*, and proceeded down Southampton Water, followed by the *Nordenfelt*, which, however, easily passed the steamer, the estimated speed of the boat being 15 knots, without any rolling motion, and the engines working so noiselessly that no sound could be heard. After running some distance the *Alexandra* returned towards Southampton, followed by the *Nordenfelt*. From a distance of 3,000 yards the latter approached, end on, at full speed. The afternoon was dull and the light so fitful that it was very difficult to distinguish the boat. At times only the forward funnel was visible; at other times the boat's position was marked only by the crest of the bow wave, which at high speed conceals the hull. Even when at 500 yards the boat presented such a slight target that it would not have been possible to take a careful aim. She easily passed the *Alexandra* at full speed.

The second trial was devoted to a submarine night attack. The night was overcast, and there were a large number of vessels moving about the *Alexandra*, whose position was indicated only by her stay-light. A careful watch was kept from 5 to 8

* The account of these trials is taken chiefly from the London Times and the English professional papers.

† The boat is here called the *Nordenfelt* for sake of simplifying the account of trial.

PEDO BOA

ement = 243 Tons.

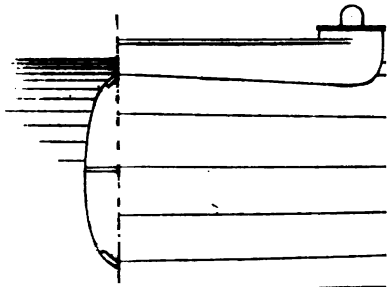

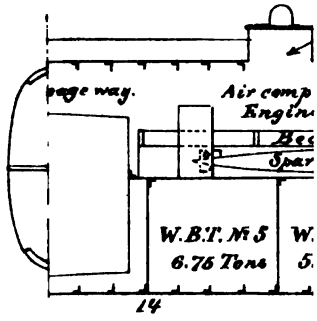

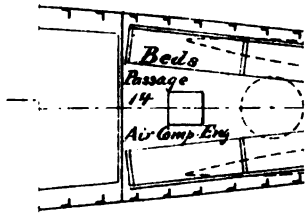

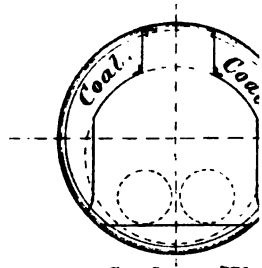

Section XX

o'clock, and just as those on board had made up their minds that the boat had met with some mishap or delivered the attack in the wrong direction, a whistle was heard some distance to windward—the signal agreed upon to indicate that the boat had arrived within 400 yards of the steamer, ready to discharge her Whiteheads. This was at 7.50 p. m. Nothing further occurred until after twenty minutes, when a whale-like blowing was heard about a hundred yards on the port bow, which was afterwards ascertained to have been caused by an attempt to free the whistle from water as the boat rose to the surface. Some imagined they could see the outline of the *Nordenfelt* close at hand, but it was not until a whistle was heard and a light shown that the spectators had any evidence of the presence of the *Nordenfelt*, which was only 80 yards off. It appears the approach was begun on slack tide, about 7 o'clock, at a speed of not more than 4 knots, the boat being about 5 feet below the surface. [Doubtful.—ED.]

The lights of the many crafts and the arrival of a number of fishing vessels under sail made some confusion, and apprehension of being run into made it necessary to rise for observation every 50 or 60 yards.

Had the electric search-light been used it is possible the boat might have been seen, but as only the forward cupola, which is nothing more than a helmet large enough to contain a man's head, would have been visible, the chances of its being hit would be exceedingly small. On the other hand, the position of the opposing vessel would have been clearly indicated. Another account says: "The night on which the actual steaming trials took place was a good average night, dark, but with no mist. It was impossible to distinguish the hull of any boat at any distance, so that the success of the attack was not at all a matter of wonder."

It also appears that the boat did not run entirely submerged at any time, but had the forward conning-tower above the surface, and only ran 100 yards as much submerged as this. The master of the boat said he approached several vessels before being sure of the *Alexandra*, and that he had great difficulty in finding her.

A demonstration of the under-water action of the Nordenfelt was given in the dock on the following morning. After the officers had an opportunity of inspecting the boat afloat, the cupolas and hatches were battened down, and sufficient water was let in to submerge her topsides level with the sea. In this condition the only reserve of flotation was contained in the conning towers and estimated at half a ton. The horizontal screws were then put in action, when the hull disappeared by the stern, the whole boat becoming almost instantly submerged. As soon as the screws were slowed she lifted readily, and when the mechanism was stopped came up like a cork. This experiment was repeated several times without mishap. This proved little as to the practical efficiency of the submarine qualities of the boat.

The sea-going qualities of the Nordenfelt have been well tested by its master, who, with a crew of eight men, kept the sea in her for six days off Land's End, during the prevalence of a gale.

TRIALS OF NORDENFELT'S SUBMARINE BOATS IN TURKEY.*

Two Nordenfelt submarine torpedo-boats, similar to those described in No. V, page 259, have been completed for the Turkish Government. The principal dimensions of these are as follows: Length, 100 feet; beam, 12 feet; displacement, 160 tons. The vertical propellers are placed in the fore and aft line near the extremities, the boats of previous design having had them fitted in side sponsons. In the preliminary trials at Constantinople this arrangement is said to have worked well.

In May, 1887, a series of trials (without torpedoes) of boat No. 2 took place in the

* The account of these trials is taken chiefly from the London Engineer and other foreign professional papers.

Bosphorus, in presence of the Sultan, who directed the manœuvres in person from the shore. The boat was ready for service, with fires banked and a pressure of 150 pounds in the reservoir, the water having been already heated. She is reported to have maintained her position in the full strength of the current off Seraglio Point, while the attendant launches found it impossible to stem it.

Being directed to attack a steamer on the Scutari shore, as a surface boat, the Nordenfelt steamed across the channel, throwing up a wave on either side so that it was difficult to see anything of the boat except the small smoke-pipe. As she neared the vessel two jets of water were suddenly thrown up. The tube doors having been thrown open for the release of the Whiteheads, the water rushing in forced out the air through the vent-holes with the above effect, thus marking the moment of the attack. A series of speed trials then took place off Seraglio Point in which a surface speed of 8 knots (over the ground?) against a 5-knot current is said to have been realized.

A second attack was made on the steamer with the boat entirely submerged. After the boat disappeared under the water nothing more was seen of her until she came up on the other side of the steamer, having passed under its keel.

Although under way for more than five hours, during two of which the boat ran under its reserve of steam, the moorings were reached with a pressure of 90 pounds in the reservoir.

FINAL TRIALS OF NORDENFELT'S SUBMARINE BOATS FOR THE TURKISH NAVY IN THE GULF OF ISMIDT, FEBRUARY, 1888.

In the experiments made in Southampton water the *Nordenfelt* carried no torpedoes, and although these showed that it was feasible for a submarine boat to approach within striking distance of an enemy, they did not show that the torpedo could be effectively discharged.

An important series of trials of the two Nordenfelt boats for Turkey took place during February, 1888, before a commission of the Ottoman Government.

The two submarine boats left Constantinople in company with a number of surface torpedo-boats and a large steamer which carried the commission. A high sea was running in the Sea of Marmora, but in spite of this the submarine boats made sixty knots in five and one-half hours. On the following day the boats were frequently submerged and kept under water for considerable periods of time. The commission expressed its great satisfaction with the reserve of power possessed by the boats which enabled them to steam for so long a time without rising to the surface.

The most important trial of all was that of actually discharging a torpedo under water. This had never been attempted before by a submarine boat.

After cruising around the steamer of the commission, the submarine boat rose to the surface some 200 yards distant, and having pointed the torpedo so that it should do no damage to any vessel in the neighborhood, again disappeared. The next moment the rising of bubbles of air to the surface showed the direction taken by the torpedo.

A night attack took place shortly afterwards, the night being calm with bright moonlight. The commission had an electric search-light in readiness, but it was the opinion of the officers in charge of the defense that it would be better not to employ it. The submarine boat was under orders to start from the steamer of the commission and to make a night attack within an hour. Owing to the extreme phosphorescence of the water the course of the boat could be traced for a long distance until it suddenly disappeared from view, and was not seen again until it blew its whistle some 400 yards on the other side of the steamer.

The night attack having been judged satisfactory, the commission demanded further experiments to determine whether submarine boats could defend themselves on the surface against ordinary torpedo-boats in the day-time. The ordinary torpedo-boat is built of thin plates easily pierced by the projectiles of light-machine guns, while

the submarine boat must be built of comparatively thick plates to stand the pressure put upon it when submerged. As the small exposed surface of the submarine boat could be hit only at a low angle, the boat is comparatively well protected, and could repel the attack of a surface boat with its Nordenfelt 1-inch machine guns.

The result of the trials in the Gulf of Ismidt, as reported in the Engineer, showed that the submarine boat could deliver its above-water attack at 12 or 13 knots. All things considered, the commissioners decided the surface boats defeated by the Nordenfelts. During all the trials the submarine boats were commanded and steered by Captain Garrett, who conducted the trials of the Nordenfelt in England.

The boats were accepted by the Ottoman Government as the nucleus of a distinct permanent department of the Turkish navy.

WADDINGTON'S SUBMARINE BOAT.

Mr. J. F. Waddington, of England, has made a great number of experiments with an electric submarine torpedo-boat, which is 37 feet long and 6 feet 6 inches in diameter amidships, tapering in a curve to a point at each end. It is propelled by electricity and carries forty-five large accumulator cells connected in series to an electromotor, which drives the propeller about 750 revolutions per minute. Three cells are said to be sufficient for running a distance of 150 miles at moderate speed.

At full speed, 8 knots, they will last ten hours. The capacity of the accumulators is 660 ampére hours. The maximum current taken by the motors is reported to be 66 ampéres; the electro-motive force, 90 volts, develops 7.96 electrical H. P. The efficiency of the motor is estimated at 81 per cent.

Two large horizontal rudders or wings are fitted at the middle of the boat so that they do not incline the boat, but only force her up and down when in motion. Propellers to produce vertical motion when not under way are fitted besides. There are also two horizontal automatic steering rudders and two vertical steering rudders at the stern. Compressed air is carried in two compartments at the ends. There is sufficient air for two men for six hours.

The boat carries two locomotive torpedoes outside, secured in place by clutches which can be opened from the inside. By releasing these clutches the propeller mo, tor of the torpedo is started, and it darts ahead of the submarine boat. A torpedo mine is also provided for attaching to any vessel at anchor, with the torpedo nets down, and which can be fired from a distance by an electric wire paid out from the submarine boat.

The great advantages the inventor claims in using electricity are that when once charged the boat is ready to start at a moment's notice; that when stopped the motive power is not subject to waste, as in case of steam power; and that no heat or poisonous gases are given off to pollute the air in the boat. It is also claimed that a small-sized class of these boats can be carried at a man-of-war's davits ready for instant use, the same as any ordinary launch.

THE FRENCH ELECTRIC SUBMARINE BOAT "GYMNOTE."

Admiral Aube, while French minister of the marine, accepted the plans of an electric submarine boat to be called the *Nautilus* (name since changed to *Gymnote*). The boat is now building in the Mourillon shops at Toulon. The design is by M. Zédé, an engineer of the Forges et Chantiers de la Mediterrannée. The general form of the boat is that of a large Whitehead torpedo. The length is 59 feet, and greatest diameter 5 feet 11 inches. It will be fitted with four rudders, two horizontal and two vertical, similar to those of the automobile torpedoes. The displacement and trim of the boat can be altered by means of tanks, which are filled or emptied by a powerful pump. In case it is necessary to rise to the surface suddenly a weight on the keel can be detached.

The motor is electric, supplied from storage batteries, and is the invention of Mr. Kreb. A special secret apparatus, it is claimed, will enable the steersman to examine the horizon while submerged.

A torpedo will be carried, to be attached to the bottom of the ship after the boat has passed under the torpedo nets; the torpedo will be fired by electricity when a safe distance has been reached.

It is reported that a submarine boat has been built in Germany. The boat is 114 feet long, and of a type similar to the Nordenfelt. The immerson is effected by means of two vertical screws. The boat is armed with two torpedoes, three McEvoy mines, and a R. F. gun. The fuel endurance is 200 miles at 12 knots speed.

The motive power is not described.

W. C. Babcock,
Lieut., U. S. N.

INDEX.

A.

Page.

Abercorn Ship Building Company 399
Acquirement of languages, England 54
Actif, boilers of 236
Admiral Nachimoff, battle ship, Russia 318
Admiralty, British, rules for boiler shells.. 224
Advancement in service with pay and enlistment, England 69
Age of admission to service:
  England 47, 68, 71
  France..... 76, 77
  Germany..... 63, 82
Age of entrance or enrollment, Naval Reserves, England 9
Aiming drill, England..... 92
Akagi, cruiser, Japan 324
Alacrity:
  Closed stokehold system of forced draft on board 240, 241
  Twin screws of 329
Albatross, trial of patent paints on hull of.. 276
Alger, boilers of..... 233
Allest's liquid fuel experiment..... 333
Alliance, Kafer's system of forced draft on board 240, 241
Alphonso XII, cruiser, Spain 319
Alphonso XIII, cruiser, Spain..... 318
Amiral Duperré, battle ship, France..161, 163, 314
Ammunition:
  Allowance of, for target practice 96, 97, 98, 108, 110
  Hotchkiss, contract for 338
  Lorenz 366
  Secondary battery, requirements, United States..... 341
Andromède, training-ship, France 314
Anglo-Brush corporation..... 184
Anson, I. H. P. of, natural and forced draft.. 243
Apprentice mechanicians, France..... 81
Apprentices in the French navy..... 77
Archer:
  Electric plant of 212
  I. H. P. of 243
Arieta, torpedo-boat, Spain 401, 405, 406
  I. H. P. of 232
Armaments:
  For auxiliary cruisers, England..... 33
  For auxiliary cruisers, France..... 35
  For *Champagne* and class..... 36
  List of English ships waiting for..... 355
  Of the new cruisers, United States..... 337
Armide, experimental fire on.....103, 104
Armington and Sims engine..... 206

Page.

Armor:
  Compound..... 380
  Compound, Siemang's 389
  Steel 380
  Trials at Gâvre, France..... 384
  Trials at Muggiano, Italy 387
  Trials at Portsmouth, England.....380, 383
  Trials, Austrian..... 388
Armor-piercing projectiles..... 380
Armored gun-vessel, Germany 315
Armstrong:
  Armor-plates..... 380
  R. F. guns..... 359
  10-inch gun, rupture of..... 358
Artificers:
  As marines..... 72
  Engine-room, England, number of..... 56
Asia, cruiser, Russia..... 404
Atago, cruiser, Japan 324
Atlanta, U. S. S., attack on, by torpedo-boats 176
Attacks by torpedo-boats:
  Day.....149, 163
  Night.....126, 132, 139, 146, 151, 160, 163, 176
Aube, Admiral, quoted 401
Aurora, belted cruiser, England..... 310
Australasian squadron..... 304
Australia, belted cruiser, England..... 309
Australian naval artillery volunteers..... 18
Australien, boilers of 235
Automobile fish-torpedoes 394
Auxiliary cruisers:
  Classification in Navy Department.... 44
  Crews to be of R. N. R. men 34
  Guns for, stored at..... 45
  Retained:
    Austria 38
    England 33
    France 36
    Germany..... 37
    Italy 36
    Japan..... 38
    Russia 37
    Spain 38
    Sweden 38
Auxiliary vessels 32
  Austria 38
  England 32
  France..... 35
  Germany..... 37
  Italy 36
  Japan..... 38
  Russia 37
  Spain 37

Page.

Auxiliary vessels—Continued.
Sweden 38
United States 42
Azor, torpedo-boat, Spain 406
Boilers of 230

B.

Baird's evaporator 237
Balance rudder, Thomson & Biles' patent .. 320
Balny, torpedo-boat, France 401
Baltimore:
Boilers of 222
Electric plant of 207
Barbey, M., quoted 401
Barham, cruiser, England 302
Barracouta, cruiser, England 302
Barrosa, cruiser, England 302
Basilisk, cruiser, England 302
Beagle, cruiser, England 302
Beardmore armor-plates 380
Belleville boilers 233
Belliqueuse, sheathing of 281
Bellite 373
Bellona, cruiser, England 302
Belt connections, dynamo, use at sea 180
Benbow:
Electric plant of 211
I. H. P. of, natural and forced draft 243
111-ton guns of 354
Bennington, cruiser, United States 300
Berdan rifle 366
Bethlehem Iron Company 337
Blake, cruiser, England 301
Blake, Professor, experiments of, in signaling through water 218
Blanco Encalada, sheathing of 284
Blanche, cruiser, England 302
Blenheim, cruiser, England 301
Blonde, cruiser, England 302
Boat guns, regulations for target practice with 107, 111
Boatman militia, Sweden 30
Boilers 222
Belleville 233
British Admiralty rules for shells of 224
Cylindrical, for naval vessels 222
For burning liquid fuel 332
Modified locomotive 225
Schichau 232
Torpedo-boat 228
Thornycroft 230
Yarrow 228
Boiler tests 224
Bombe, torpedo-vessel, France 314
Boilers, fire-boxes of 228
Booms, experiments against, by torpedo-boats 145, 147
Boston, cruiser, United States 301
Battery of 337
Bounty:
Construction, France 35
Construction, Italy 36
Navigation, France 35
Navigation, Italy 36
British navy 68

Page.

Boys, entry of, in:
French navy 76
German navy 82
Bradley multipolar dynamo 193
Brennan torpedo 391
Brennus, battle-ship, France 312
Bretagne, school-ship, France 78
Brisk, I. H. P. of, natural and forced draft. 243
Brotherhood engine 203, 214
Brown, Admiral, quoted 401
Brown's armor-plates 380, 383, 384
Bullivant torpedo-net 154
Buona Ventura, torpedo-boat, England, for sale 399
Bureau of Steam Engineering, method of testing boilers 225
Buzzard, cruiser, England 311

C.

"Cadres," law of France 58
Cammell's armor-plates 380, 383
Camperdown:
Electric plant of 211
I. H. P. of, natural and forced draft 243
Candia, Ferrando's system of forced draft on board 238, 241
Capitaine de long cours 21
Carbo-dynamite 374
Cars, railway, for transportation of torpedo-boats 290, 292
Cartridge, small arm:
Hurst 372
Lorenz 366
Casualties in manœuvres:
Ships 141
Torpedo-boats 142, 162
Casualties, gun (see gun casualties) 358
Cécille, cruiser, France 313
Celluloid sheathing 285
Cement:
Patent 270
Portland 270, 271
Ceram, cruiser, Holland 324
Experiments with screw-propellers of .. 330
Chambers's torpedo-boat cradle 294
Chanzy, cruiser, France (contract canceled). 314
Charleston, cruiser, United States 298
Boilers of 222
Chemical action on iron and steel plates .. 263, 268
Chicago:
Battery and gun-carriages for 337
Electric motor for 8-inch gun of 189
Electric plant of 206
Steam trial 301
Chokai, cruiser, Japan 324
Chuen Tiao, cruiser, China 323
Cigogne, river gun-vessel, France 313
City of Berlin, Howden's system of forced draft on board 238, 240
City of New York:
Admiralty subvention of 34
Balance rudder of 320
City of Paris, Admiralty subvention of 34
City of Venice, Howden's system of forced draft on board 241

Page.

Clark, Chapman and Parson's electric plant. 213
Closed stokeholds:
In the merchant service 237
In the Navy 239
Coal consumption with forced draft 237, 241
Coaling:
Ships at sea 166
Torpedo-boats at sea 153, 163
Coast defense 7
Austria 29
England 25
France 25
Germany 24
Italy 27
Norway 31
Russia 28
Spain 29
Sweden 30
United States 38
Coast guard:
England 18, 19
Norway 31
Spain 30
Sweden 30
United States 19
Coast Survey, U. S., in relation to Naval Reserve 19
Cocodrile, Belleville boilers of, France 236
Colbert, battle ship, France, trial of 314
Command, training in 50
Commerce destroyers 140, 144
Commercial electrical apparatus, common, unfitness for use on shipboard 179
Compagnie Générale Transatlantique, Government service of 36
Comparison of systems of forced draft 241
Competitive firing, France 100
Composite cruisers, Germany 315
Compound armor 380, 383
Compound dynamo, advantages for ships' use 190
Concord, cruiser, United States 300
Condor, torpedo vessel, France, speed 314
Condor, gun-boat, Spain 321
Conscription, military, Germany 82
Conscripts, France 75, 77
Continuous service:
Advantages of, in connection with training of boys 67
Disadvantages of 70
Controllable torpedoes 391
Convoy formation against torpedo-boats 157, 158, 159, 163
County of York, quadruple expansion engines of 327
Couleuvrine, torpedo vessel, France 314
Courbet, battle-ship, France 314
Electric plants of 191
Coureur, torpedo-boat scout, France 401
Couronne, gunnery-ship, France 78, 97, 98, 103, 104
Courrier, closed stokehold system of forced draft on board 237
Cradles for transportation of torpedo-boats 290, 294
Cranes, traveling, Navy Department contracts for 344

Page.

Creusot, le, armor plates:
Tempering 384
Trial of 384
Crews, organization of:
England 69
France 75
Crompton dynamo 205
Cruiser, Sweden 325
Cunard Line, Admiralty agreement with 34

D.

Daphne, cruiser, England 306
De Bange gun, rupture of 358
Deck officers' school at Kiel, Germany (final training) 86
Defenses of a port, improvised 148
Defense Vessel Construction Company 399
Depot-ship, torpedo 163
Derrick, handling torpedo-boats by means of 290
Despatch vessel, Germany 315
Dessoug, corrosion of hull 270
Destructor:
Heating surface and I. H. P. of 228
Screw propellers of 330
Dévastation, battle-ship, France, speed 314
Dimitri Donskoi, lacquering of hull 277
Direction of submarine defense (France) 79
Director, firing from 93
Disguises of ships 126, 129, 132
District naval militia (Norway) 31
Division torpedo-boats (Germany) 398
Divisions of German naval service and organization of each 83
Docks, torpedo-boat 402
Dockyard battalions (England) 8
Dockyard division (Germany) 22, 82
Dogali:
Electric plant of 210
I. H. P. of, natural and forced draft 243
Screw-propellers of 329
Dolbear, Professor, experiments in signaling 218
Donetz, cruiser, Russia 318
Driggs-Schroeder R. F. gun 361
Dupuy de Lôme, protected cruiser, France. 312
Dynamite guns:
Zalinski 348
German 351
Maxim 352
Dynamo engines 194
Armington and Sims 206
Brotherhood 185
Compound direct acting 212
Raworth 184
Westinghouse 195-200
Willan's compound 200-204
Dynamos 190
Comparison of American and European 192
Compound 190
Gramme 185
Multipolar 193, 194
Series 190
Shunt 190
Siemen's Ring 213

Page.

Dynamos—Continued.
Slow speed 192
Slow speed, manufacture in United States 185
Victoria 184
Dynamite shell:
Graydon 376
Smolianinoff 378
Snyder's 378
Zalinski's 349
Dynamite cruiser, *Vesuvius*, United States. 300

E.

Eber, cruiser, Germany 317
Eight-inch B. L. R., Army, experimental firing with 352
Ejercito, torpedo-boat, Spain 406
Electric:
Broadside firing 93
Economy 204
Motors 189, 219
Plant, requirements of 180
Plants, recent United States 206
Submarine boats 411, 419
Electricity on shipboard 179
Elswick 11-inch howitzer mount 358
Engineers, England, number of 56
Engineers and constructors, school for, Genoa 66
Engineers, torpedo (Germany) 66
Engineers, training of (France) 62
Engineer students, entry and training of (England) 54
Engine-room artificers, England, number of. 56
Engines, dynamo 194
Enlistment, conditions of:
England 68–71
France 75–77
Germany 82, 83
Enrollment, requisites of Royal N. R., England 9
Ernest, gun-vessel, England 307
Etna, Fothergill's system of forced draft on board 239, 241
Evaporative experiments:
Belleville boilers of the *Shearwater* 236
Forced draft, *Marceau's* boiler 242
Forced draft, Thornycroft boiler 242
Natural and forced draft, W. G. Spence. 243
Evaporators 223, 236
Exterior protection:
Paints 272–278
Sheathing 278–287
Explosives:
Bellite 373
Carbo-dynamite 374
Graydonite 374
Mélinite 373
Roburite 374
Smokeless powders 375

F.

Fatum, torpedo-boat, Italy 403
Fee-Chen, cruiser, China 323
Feed-water heaters 223

Page.

Ferrando's system of forced draft 238, 241
Field-guns, Nordenfelt, R. F 363
Firemen, training of (France) 81
Firing camp at Chalons 80
Firing while under way, rules for, Italy 111
Firminy projectiles 382
Firth:
Armor-piercing projectiles 382
Armor-plates 380
Fish Hawk, trial of sheathing of 282
Fish torpedoes 394
Fiske, Lieutenant, U. S. Navy, signaling experiments on the U. S. S. *Atlanta* 217
Floor space, dynamo 180, 182, 184, 195, 204, 210, 214
Flores, cruiser, Holland 324
Experiments with screw-propellers of . 330
Folgore, boilers of 225
Foosoo, lacquering of hull 277
Forbin, cruiser, France 313
Forced draft 237
Closed stokeholds 237
Comparison of different systems 241
Evaporation experiments, *Marceau's* boiler 242
Evaporation experiments, Thorneycroft boiler 242
Evaporation experiments, W. G. Spence. 243
Ferrando's system 238, 241
Fothergill's system 238, 241
Gain by the use of 243
Howden's system 238, 241
Kafer's system 241
Wyllie and Morrison's system 238, 241
Yarrow experiment 242
Forgings, gun 338, 343
Fort Adams, passage of by United States evolutionary squadron 170
Forth, cruiser, England 310
I. H. P. of, natural and forced draft 243
Fothergill's system of forced draft 238, 241
Friction driving, dynamo 181
Furnaces, size of 223
Fusiliers-marins (France) 58

G.

Gabriel Charmes, torpedo-boat 314, 401
A failure 164, 314, 401
Galatea, cruiser, England 309
Closed stokehold system of forced draft on board 239, 241
Feed-water heaters of 223
I. H. P. of, natural and forced draft 243
Génie Maritime 62
General remarks upon conditions governing the proper determination of a system of naval reserves and coast defense 38
Germania company 406
Germicide paint 274
Goldfinch, gun-vessel, England 303
Göta, coast-defense vessel, Sweden 325
Grasshopper, torpedo-vessel, England 306
Graydonite 374
Graydon's shell, experiments with 376
Greenwich College 52
Greif, dispatch vessel, Germany 317

Page.
Guard-ships, British 74
Gun casualties 358
Rupture of the 340mm de Bange gun.... 358
Armstrong 10-inch gun 358
Longridge's 6-inch gun 358
The Hope gun 359
Gun-cotton shell 379
Gun forgings:
Navy Department contracts for.....338, 343
Tests for United States secondary batteries 338, 343
Gun lathes, Navy Department invitation for bids for 344
Gun mounts or carriages United States... 341
Gun shops, Navy Department contract for erection of 344
Gun trials 348
Pneumatic dynamite gun 348
German pneumatic gun 351
Maxim dynamite gun 352
U. S. Army guns 352
H. M. S. *Benbow's* 111-ton gun..... 354
Krupp 40cm guns 355
Wire-wound guns 355
Russian 6-inch gun 355
Quick's 3-inch B. L. R 356
Gunnery ship:
Excellent, England 52
Couronne, France.....78, 97, 98, 103, 104
St. Louis, France 78
Gunnery training 90
England 73, 90
France 78, 97
Germany 85, 104
Italy 109
Guns, English, number of issued for sea service 354
Guns, material and workmanship, United States 342
Guns, rapid-fire and machine 359
Armstrong 36 and 70-pounder R. F. guns 359
Hotchkiss R. F. guns 360
Driggs-Schroeder R. F. gun 361
Krupp R. F. guns 362
Maxim R. F. guns 362
R. F. guns in the field 363
Maxim automatic machine gun 364
Guns:
Benbow 111-ton 354
Dynamite pneumatic 348
German pneumatic 351
Krupp 40cm 355
Maxim pneumatic 352
Quick's 3-inch B. L. R 356
Steel cast, United States 342
Steel cast, United States, contract for . 342
U. S. Army guns 352
Wire-wound 355
Woolwich 354
Gymnote, French electric submarine boat.. 419

H.

Habana, Spanish torpedo-boat 406
Hadfield projectiles 381
Halcon, Spanish torpedo-boat 406
Boilers of 230
Hall torpedo 396
Hand-lamp, Sautter, Lemonnier & Co..... 186
Handling torpedo-boats 290
Hasidate, coast defense vessel, Japan..... 324
Hebler, theory of small-arm calibre 366
Hecla, alteration of screws of 329
Hero:
Electric plant of 211
I. H. P. of, natural and forced draft... 243
High angle fire on protective deck, experimental 387
High explosive projectiles 376
Graydon's dynamite shell 376
Gun-cotton shell 379
Shell charged with Snyder's explosive . 378
Smolianinoff shell 378
Hirondelle, cruiser, France:
Speed 314
Boilers of 236
Holtzer projectiles 380
Hope gun, bursting of 359
Hotchkiss R. F. guns and ammunition 360
Hotchkiss Ordnance Company, contracts with Navy Department 338
Manufacture of Howell torpedo..... 395
Hovgaard submarine boat 411
Howden's system of forced draft.....238, 241
Howe:
Electric plant of 211
Twin screws of 329
Howell torpedo 395
Howitzer:
Army, 7-inch, trial of 353
Krupp 28cm, experimental firing with ... 387
Mount, Elswick, 11-inch 358
Huan-tai, cruiser, China 322
Hurst cartridge 372
Hydrokineter 223

I.

Iljin, I. H. P. of, natural and forced draft .. 243
Immortalité, belted cruiser, England 309
I. H. P. of, natural and forced draft 243
Boilers of 222
Impérieuse, battle ship, England 307
Twin screws of 329
Indomptable, battle ship, France (speed) ... 314
Electric plant of 211
Inscription:
Italy 26, 89
Maritime, France 20, 75
Maritime, Germany 82
"Inscrits" in French navy 76
Inspection of torpedoes, Germany..... 85, 88
Instruction in specialties, Germany 85
International and Inman line, Admiralty agreement with 34
Introductory 5
Irene, cruiser, Germany 316
Isla de Cuba, cruiser, Spain 321
Isla de Luzon, cruiser, Spain 321
Itsukusima, coast defense vessel, Japan 324

J.

Japanese lacquer for ships' bottoms..... 277
Jenciche, torpedo-boat, Russia..... 403

Page.
Jessop armor-plates 380
Johnson-Barland smokeless powder 375
Jubilee, English:
Fleet 123
Review formation 122-125
Round for range 356

K.

Kafer's system of forced draft 241
Kai Pan, cruiser, China 323
Kanjiu, training-vessel, Japan 324
Kobe, Japan, torpedo-boats building at 403
Kotline, torpedo-boat, Russia 404
Kropatschek rifle, fire for accuracy 368
Krupp:
Armor trials 358
Projectiles 382
R. F. guns 362
40-centimetre, B. L. R., trial of 355
28-centimetre, howitzer, trial of 387
Kubanetz, cruiser, Russia 318

L.

Lachta, torpedo-boat, Russia 404
Lacquer for preservation of ships' bottoms 277
Lafont, Admiral, quoted 401
Lahn, evaporator of 237
Landsturm, Germany 22
Landwehr, Germany 22, 82
Lapwing, gun vessel, England 303
Law of "cadres," France 58
Lead tempering 385
Lebel rifle, construction of 370
Leclanché cell 215
Le Creusot armor-plates:
Tempering 384
Trial of 384
Leobersdorfer armor, trial of 388
Lepanto, battle ship, Italy, steam trial of 315
Lepanto, cruiser, Spain 318
Leyte, cruiser, Spain, rejected 321
Lézard, river gun-boat, France 313
Life-Saving Service, U. S., in relation to Naval Reserve 19
Light-House Service, U. S., in relation to Naval Reserve 19
Li Kin, cruiser, China 323
Liquid fuel, experiments with 332
Lloyd's rules for boiler testing 224
Long, Commander, R. N., torpedo fleet 400
Longridge wire-wound guns 356
Casualties 358
Lorenz ammunition 366
Low's projectiles 383

M.

Machine guns 359
Regulations for target practice with, Italy 111
Machinery 326
Magenta, trial of armor plates for 384
Magicienne, cruiser, England 306
Magpie, gun vessel, England 303
Maine, armored cruiser, United States 298

Page.
Manchester dynamo with belt-tightening gear 181
Mangin projector 136, 216
Manjiu, training bark, Japan 324
Manning the Navy:
Austria 28
Denmark 31
England 8
France 20
Germany 22
Greece 32
Holland 31
Italy 26
Japan 32
Portugal 31
Russia 28
Spain 29
Sweden 30
Turkey 32
Männlicher magazine rifle 366
Manœuvres, naval 122
England 122
France 152
Italy 164
United States 167
Manœuvres, naval and military, United States 167
Rules governing umpires 168
Manœuvres, torpedo:
England 145
France 152
Italy 164
United States 176
Marathon, cruiser, England 306
Marceau, evaporative experiments with boiler of 242
Maria Adelaide, gunnery ship, Italy 109
Marine artillery:
England 19, 26
France 21, 25
Marine College, Paris, France 60
Marine Corps, United States 19
Marine infantry:
England 19, 26
France 21, 25
Marine pensioner reserve, England 19
Marines, German 83, 107
Mark III, 6-inch gun 344
Marquis de la Enseñada, cruiser, Spain 318
Martin & Platt, electric plant, England 181
Matsusima, coast defense vessel, Japan 324
Mauser magazine rifle 366
Maxim:
Machine gun 337
Pneumatic dynamite gun 352
R. F. gun 364
Mechanicians:
School for, Venice 66
Training of, France 62
Medea:
Boilers of 224
Engines of 326
Mediterranean squadron, British, manœuvres 147
List of vessels in 148

Page.
Medusa, cruiser, British 306
Megæra, loss of, due to corrosion 269
Mégy dynamo-engines 191
Mélinite 373
Melita, cruiser, England 306
Melpomène, training-vessel, France 314
Men, training of:
England 8, 67, 90
France 20, 75, 97
Germany 21, 82, 109
Italy 26, 89, 109
Mercantile marine:
England, strength of 15
United States, strength of 15
Messageries Maritimes 36
Meteor, Austrian torpedo-vessel 322, 399
Milan, cruiser, France:
Boilers of 235
Speed 314
Minin, belted cruiser, Russia, Belleville boilers of 233
Mogador, cruiser, France, contract cancelled 314
Monitor turret mount, proposed, United States 344
Montebello, torpedo-vessel, Italy 315
Boilers of 227
Screws of 330
Monzambano, torpedo-vessel, Italy 315
Boilers of 227
Screws of 330
Mortar, army, 12-inch, B. L., trial of 353
Motor, electric:
For gun-carriages 189, 207, 219
Sprague 207
Mounts, secondary battery, United States, requirements 341
Muntz metal 280

N.

Nagant rifle 366, 367, 368, 370
Narcissus, belted cruiser, England 309
Boilers of 222
Natural and forced draft, I. H. P. of 243
Narod, quadruple expansion engine of 327
Naval artillery, Germany 22, 24
Naval artillery volunteers, England 17
Naval attack on Newport, R. I 167
Naval barracks 74
Naval brigade:
France 161
United States 172
Naval coast volunteers, England 8
Naval district militia:
Norway 31
Spain 29
Naval manœuvres (see Manœuvres, naval). 122
Naval militia, proposed, United States 42
Examination of candidates for 43
Rank, pay, and privileges of 43
Naval reserves and coast defenses 7
Naval reserve:
Proposed, United States 42
Proposed, United States, duties of 42
Artillery, proposed, United States 42

Page.
Naval Reserve—Continued.
Torpedo corps, proposed, United States. 42
Austria 28
Denmark 31
England 8
France 20
Germany 21
Greece 32
Holland 31
Italy 26
Japan 32
Norway 31
Portugal 31
Russia 28
Spain 29
Sweden 30
Turkey 32
Remarks on German, French, and English systems 24
Naval reserve, general subject (*see* Reserves, naval) 7
Introductory 7
Naval school at:
Brest, France 56
Leghorn, Italy 66
Naval training, general subject (*see* Training, naval) 47, 89
Naval University, Paris 60
Naval volunteer corps, Spain 29
Navigating naval reserve, United States, proposed 44
Composition of 44
Annual retaining fee 44
Nets, torpedo (*see* Torpedo-nets) 396
Bullivant 154
Newark, United States cruiser 299
Boilers of 222
Evaporators of 237
Nile, battle-ship, England 305
Nordenfelt:
R. F. field-guns 363
Submarine boat, trial of 416
Torpedo 393
Normand, constructor of the *Sveaborg* 404
Novices in the:
British navy 70
French navy 77
Nuestra Señora del Carmen, gun-boat, Spain 320
Nymphe, composite cruiser, England 306

O.

Officers, election as, Germany 64
Officers, petty and warrant, manner of grading, England 69
Officers, training of 47
England, conclusions of committee of 1885 on 48
France 56
Germany 63
Italy 66
Officers of the reserve:
Austria 29
Italy 27
Japan 32

Page.

Officers of the reserve—Continued.
Russia 28
Spain 29
Sweden 30
Ohio:
Coal consumption of 240
Howden's system of forced draft on board of 238, 241
Olivette, forced draft of 238
Omaha, electric plant of 206
Ordnance 336
Orlando, belted cruiser, England 308
Boilers of 222
I. H.P., natural and forced draft 243
Twin screws of 329
Ortegal, Belleville boilers of 235
Ouragan, torpedo-boat, France 401

P.

Paints 272–278
McInnes 273
Marine germicide 274
Hays' 273
Walsh's 273
U. S. Naval Advisory Board tests 275
Paleina (powder) 375
Pamyat Azova, armored cruiser, Russia 318
Partridge, gun-boat, England 306
Passage of:
Forts by ships 170
Obstructions 145
Patent cements 270
Patrick torpedo 393
Pay and allowances, Royal N. R., England 11
Peace, Thornycroft boiler of 232
Peacock, gunboat, England 306
Peninsular and Oriental Steamship Line, Admiralty's agreement with 34
Pensions, England 69
Personnel, naval, organization of, men:
England 69
France 75
Petrel, gun-vessel, United States 299
Boilers of 222
Evaporator of 237
Pheasant, gun-boat, England 306
Philadelphia, cruiser, United States 299
Boilers of 222
Boilers, auxiliary of 237
Physical characteristics, gun metal 339
Physicians in the German navy 83
Pickling plates 268
Pinta, trial of paints on hull of 275
Pitting 265
Pittsburgh Steel Casting Company 342
Plant, electric:
Archer, R. N 212
Benbow, R. N 211
Camperdown, R. N 211
Foreign 210
Dogali, Italian cruiser 210
German 212
Hero, R. N 211
Howe, R. N 211
Indomptable, France 211

Page.

Plant, electric—Continued.
Steam-yacht *Restless* 182
Steam turbine and dynamo 214
Torpedo-boat, Brotherhood engine with Victoria dynamo 213
Torpedo Station 207
Pneumatic:
Dynamite guns, U. S 348
Gun Carriage and Power Company 344
Gun-carriage, 8-inch 346
Turret mount 344
Plotting shots on vertical plane 118
Portland cement 270
Porpoise, I. H. P., natural and forced draft 243
Portsmouth:
Armor trials 380, 383
Jubilee naval review 124
Powder for new U. S. Navy guns 337
Quick's cake 357
Paleina 375
Smokeless 375
Preliminary training, Germany 63, 104
Premium for speed, France 36
Preservation of iron ships' bottoms 263
Prinzess Wilhelm, cruiser, Germany 316
Prize firing, rules governing, England 94
Prizes awarded at prize firing 96
Projectiles 97, 376, 380
Armor-piercing 380
Firminy and St. Chamond 382
Hadfield 381
High explosive 376
Holtzer 380
Krupp armor-piercing 382
Low 383
United States 337, 338
Promotion, table of advancement, France 60
Promotion by selection:
England 51
France 59
Promotion by seniority:
England 50
France 59
Protected cruiser, Germany 315
Protection against corrosion by sheathing 279–287
Protective decks, effects of high angle fire on 387

Q.

Quadruple expansion engines 327
Quick's cake powder 357
3-inch B. L. R., trial of 336, 356

R.

Racoon, torpedo vessel, England 311
Ram cruiser, Austria 322
Rance, transport, France 313
Ranger, trial of patent paints on hull of 274
Rapid-fire guns 359
In the field 363
Regulations for target practice with 110, 111
Armstrong 36 and 70-pounder 359
Driggs-Schroeder 361
Hotchkiss 360
Krupp 362
Maxim 362, 364

Page.

Rattlesnake, torpedo-vessel, England..... 400
Boilers of 227
Raworth engine..... 184
Rayo, torpedo-boat, Spain..... 406
'Recrutement,' France 77
Redbreast, gun vessel, England 303
Redpole, gun vessel, England 303
Reed, Sir Edward, quoted..... 390
Reina Cristina, cruiser, Spain..... 319
Reina Mercedes, cruiser, Spain..... 319
Reina Regente, cruiser, Spain..... 320
Balanced rudder of..... 320
Remington rifle..... 366
Requirements in steam-engineering, British midshipmen 54
Research, surveying vessel, England..... 304
Reserve of vessels, United States proposed. 44
Reserves, naval (*see* Naval Reserves) 7
Australia 18
Austria 28
Denmark 31
England 8
France 20
Germany..... 21
Greece 32
Holland 31
Italy 26
Japan..... 32
Norway..... 31
Portugal 31
Russia 28
Spain 29
Sweden 30
Turkey 32
United States, proposed..... 42
General remarks 38
Resistance, experiments..... 396
Restless, electric plant of.....182, 183
Result of experiments with four and two bladed screws 330
Retired officers' reserve:
England 11
Italy 26
Japan..... 32
Re Umberto, engines of..... 326
Revenue marine, United States in relation to Naval Reserves..... 19
Revolving cannon:
Navy Department contract for..... 338
Shields, trial of 384
Rigault de Genouilly, boilers of..... 236
Ringdove, gun vessel, England..... 303
Riveting, corrosion produced by 266
Roburite 374
Royal Engineers 26
Royal naval:
Artillery volunteers..... 17
Coast volunteers 8
Royal Naval Reserves 8
Cost of corps..... 13
Discussion of value 14
Honorary officers 13
Organization 10
Qualifications 9
Retirement, promotion, and pay 11
Service required 11

Page.

Royal Naval Reserves—Continued.
Strength, authorized and enrolled.....8, 9, 16
Strength of mercantile marine 15
Training required 10
Rudder, Thomson & Biles patent balanced 320, 321
Rules for naval manœuvres, United States. 168

S.

Sailor artillery, Germany 84
Sailor division, Germany 22, 82
Salamander, torpedo-vessel, England 303
Sandfly, torpedo-vessel, England 306
San Francisco, cruiser, United States..... 299
Boilers of 222
Crank shaft of 326
Saporojetz, cruiser, Russia 318
Sardegna, boilers, engines, and crank-shaft of..... 326
Say When, quadruple expansion engines of. 326
Schichau:
Torpedo-boats 399, 402
Boilers..... 232
Torpedo-boat screws..... 330
Schneider, Messrs, le Creusot 325, 380, 381, 384, 385, 387, 403
School:
Gunnery and torpedo, Spezia..... 66
Of musketry, *Vengeance* and *Néméris*, France..... 79, 80
Of submarine defense, France 57
Mechanicians', Venice 66
Torpedo, Kiel 64, 83
Engineers' and constructors', Genoa ... 66
School-ships:
England 68–71
France.....57, 76, 77, 78
Germany..... 84, 85
Schwalbe, cruiser, Germany..... 316
Schwartzkopff torpedo..... 395
Scout:
Twin screws of..... 329
Zincking of underwater plates of 277
"Scouts" 144
Screw propellers..... 328
Comparison between four and two bladed 330
Experiments with gun-boats *Ceram* and *Flores*..... 322
Schichau torpedo-boat, data of 330
Sea Fencibles, England..... 8
Sea Gull, torpedo-vessel, England..... 303
Seaman gunner torpedo man (S. G. T.), England..... 73
Seamanship, modern 54
Seamen pensioners' reserve, England 18
Seamen:
Percentage of American in United States ships..... 15
Percentage of British in British ships... 15
Search-lights.....131, 146, 147, 148, 149, 150, 152, 161, 166
Advantages of, U. S. S. *Atlanta*..... 178
Disadvantages of use in fleet.....146, 166
Secondary batteries:
Electric..... 219
Ordnance, United States 338

Page.
Secondary training, Germany 85
Second reserve, Japan 32
See battalion, Germany 22, 84
Seewehr, Germany 22, 82
Selection, promotion by:
England 50
France 59
Serpent, torpedo-vessel, England 311
Severn, twin screws of 329
Sfax, cruiser, France, speed 314
I. H. P. of, natural and forced draft 243
Sharpshooter, torpedo-vessel, England 303
Shearwater, evaporation test of Belleville boiler of 236
Sheathing, wood with copper 279-282
Zinc 282-285
Sheldrake, torpedo-vessel, England 303
Shells, armor-piercing 380
Firminy and St. Chamond 382
Hadfield 381
Holtzer 380
Krupp 382
Low 383
Shells, high-explosive:
Graydon's dynamite 376
Gun cotton 379
Smolianinoff 378
Snyder's 378
Zalinski 349
Shells, steel:
Cast 386
Forged 386
Shields, gun 386
Ships 297
Austria 322
China 323
Denmark 323
England 301
France 312
Germany 315
Holland 324
Italy 314
Japan 324
Russia 317
Spain 318
Sweden 325
Turkey 325
United States 297
Ships' Boys' Institute, Friedrichsort 84
Short belt driving, dynamo 181
Short practice, target, England 92
Short service, defects of 67
Sicilia, engines of 326
Siege gun, army 5-inch, trial of 353
Siemang's compound armor 389
Siemen's ring dynamo 213
Signaling, electric 216
Signal stations, necessity of 144
Silliman, destruction of 336, 348
Sindh, Belleville boilers of 235
Skipjack, torpedo-vessel, England 303
Small-arm men, training of, France 80
Small-arms 360
Austria 366
Belgium 366

Page.
Small-arms—Continued.
Denmark 366
England 366
France 366
Germany 366
Russia 366
Berdan 366
Kropatschek 367, 368, 369
Lebel 366, 370
Lee 366
Männlicher 366
Mauser 366
Nagant 366, 367, 368, 370
Remington 366
Small craft, inefficiency of, against armored ships 154, 160, 161, 162, 174
Smoke, disadvantages due to 166, 175
Smokeless powders 375
Paleina 375
Smolianinoff shell 378
Snyder shell 378
Spanish Transatlantic Steamship Company, Government agreement with 37
Spanker, torpedo-vessel, England 303
Sparrow, gun-vessel, England 303
Specialities, classification of, France 75
Special torpedo and gunnery training:
England 52, 73
France 57, 79
Germany 65, 85
Speedwell, torpedo-vessel, England 303
Trial of patent paint on hull of, United States 276
Spence, W. G., evaporation experiments, natural and forced draft 243
Spencer armor-plates 380
Spider, torpedo-vessel, England 306
Squadron of evolutions:
Value of 53
Manœuvres of, France 159
Target practice of, France 103
Standard, Imperial yacht, Russia 317
Standard Steel Casting Company 342
St. Chamond projectiles 382
Steam trials (*see* Ships):
England 307
France 314
Germany 317
Italy 315
Japan 325
Russia 318
Spain 320
United States 301
Steel-cast guns 342
Stella, Wyllie and Morrison's system of forced draft on board 238, 241
Stiletto, torpedo-boat, United States 406
St. Louis, gunnery ship, France 97
Storage of torpedo-boats 291
Strength of mercantile marine:
Great Britain 15
United States 15
Submarine boats 408
England 416
France 419

Page.

Submarine boats—Continued.
Germany 420
Turkey 417, 418
United States 408–411
"Surface," "covered," "submerged" . 408
Speed, power, endurance 408
Ease of manœuvring 409
Stability, structural strength, power of offense 409
Quality and workmanship 410
General remarks 410
Submarine boats, electric:
French 419
Hovgaard 411–416
Waddington 419
Submarine boats, Nordenfelt:
Trials of, in England 416
Trials of, in Turkey 417
Final trials of, in Turkey 418
Submarine miners, England 26
Submarine mines 147, 148, 149, 170, 174. 175
Subsidy paid for war service (see Auxiliary Cruisers and Bounties).
Superior school, Paris, France 60
Sveaborg, torpedo-boat, Russia 398, 404
Swatara, Kafer's system of forced draft on board 240

T.

Table of advancement, France 60
Tactical training 53
Takachiho, cruiser, Japan 325
Target diagrams 115
Target-firing regulations 92, 94, 97, 105, 110, 111
England 92
France 97
Germany 104
Italy 110
North Atlantic Squadron, United States. 114
Target-practice afloat 90
England 90
France 97
Germany 104
Italy 109
United States 114
Of the French squadron of evolution... 103
Gunnery ship, France 97
Targets:
England 94
France 97
Germany 105
Tchernomoretz, cruiser, Russia 318
Tchesme, liquid fuel on board of 333
Telemeter, employed in target practice, Italy 110
Telephone 217
Tempering armor-plates 384, 385
Terni armor, trials of 387
Terretz, cruiser, Russia 318
Terror, contract for pneumatic plant for.... 344
Terror, spherical engine 203
Tests and acceptances of gun forgings..... 338
Tests, boiler 224
Texas, battle ship, United States 297

Page.

Thermostat, disadvantages of, on board ship. 216
Thornycroft:
Boiler 230, 398
Evaporative experiments, forced draft. 242
Torpedo-boats 399, 400, 403
Thrush, gun-vessel, England 303
Tiger, torpedo-vessel, Austria 322
Tisima, gun-vessel, Japan 324
Torpedo-boat:
Attacks, percentage of successful 163
Coaling at sea 153, 163
Manœuvres 151, 153, 155, 160, 162, 166, 176
Torpedo boats 398
Austria 399
China 399
Denmark 399
England 399
France 400
Germany 402
Italy 402
Japan 403
Russia 403
Spain 405
Turkey 406
United States 406
Damage inflicted by sea 156, 162
Decrease in speed of 159, 398, 404
Docks for 402
Storage of 291
Transportation of (*see* Transportation). 288
Unseaworthiness and weakness of 145, 151
153, 154, 156, 157, 162, 163
Torpedo companies, Germany 88
Torpedo corps:
First organized 41
Special, Germany 64, 87
Torpedo depot-ship 163
Torpedo division, Germany 22, 25
Torpedo Experiment and Trial Board 87
Torpedo men, training of:
England 73
France 79
Germany 87
Torpedo-nets 152, 154, 157
Bullivant 154, 157
Resistance experiments 396
Steel wire, efficiency of 166
Torpedo service, France 79
Torpedo-station plant, electric, United States 207
Torpedo target-practice 159
Torpedo-vessel, Austria, new 322
Torpedo warfare, rapid approach necessary in 151
Torpedoes 391
Torpedoes, controllable 391
Brennan 391
Nordenfelt 393
Patrick 393
Torpedoes, automobile fish 394
Hall 396
Howell 395
Schwartzkopff 395
Whitehead 394
Trafalgar, battle-ship, England 304

Page.
Trained men (T. M.), England 73
Training brig, England 304
Training, naval 47
England 47, 67, 90
France 56, 75, 97
Germany 63, 82, 104
Italy 66, 89, 109
United States 114
Training system:
England, defects of 70
North Atlantic Squadron, United States 114
Transportation of torpedo-boats by railway 288
Cars 290, 292
Cost 293
Cradles 294
Chambers' 294
Derricks 290
Facilities 292
France, experiments in 289
Rates 292
Russia 288
Speed 292
Train, composition of 292
Trucks 290, 294
Conclusions 293
Traveling cranes, Navy Department contract for 344
Trials:
Armor 383
Guns 348
Patent paints 275, 276
Projectiles 348, 380
Small-arm 367
Steam (*see* Ships) 297
Submarine-boat (*see* Submarine-boats) . 408
Torpedo-boat (*see* Torpedo-boats) 398
With one, two, and three screws 330
Triple screws 330
Tripoli:
Boilers of 225, 228
Trial of screws of 330
Turret mount, *Terror* 344
Twin screws:
Tactical value 144
Particulars of, high speed 329

U.

Undaunted, belted cruiser, England 308
Boilers of 222
Closed stokehold system of forced draft on board 240, 241
I. H. P. of, natural and forced draft 243
Uraletz, cruiser, Russia 318

V.

Valkyrian's armor-plate, trial of 384
Varnish for hulls 272, 277
Vernon, torpedo-ship, England 52
Vessels launched:
Austria 322
China 323
England 304
France 313
Germany 316
Holland 324
Italy 315

Page.
Vessels launched—Continued.
Japan 324
Russia 318
Spain 319
United States 300
Vessels proposed or laid down:
Austria 322
China 323
Denmark 323
England 301
France 312
Germany 315
Italy 314
Japan 324
Russia 317
Spain 318
Sweden 325
Turkey 325
United States 297
Vessels taking part in manœuvres:
England 123, 148
France 152
Italy 164, 165
United States 169
Vesuvius, dynamite cruiser, U. S. 300
Engines of 326
Vice Almirante MacMahon, gun vessel, Spain 320
Vicker's armor-plates 380
Victoria, battle-ship, England 307
Victoria dynamo 184, 214
Vindava, torpedo-boat, Russia 404
Volage, success as a commerce destroyer in the British manœuvres 144
Voltage 185
Voltaic electricity 215
Voltigeur, automatic feed regulators of 234
Volunteer fleet, Russia 37
Volunteers, one, three, and four years, Germany 83
Vulcan, torpedo depot ship, England 303

W.

Wacht, dispatch-vessel, Germany 318
Waddington submarine boat 419
Warfare, torpedo, rapid approach necessary in 151
Weir's evaporator 237
Westinghouse engine 195–200
Weston dynamo, disadvantages of, as a slow-speed machine 209
White:
Torpedo-boats 400
Torpedo-catcher 399
Whitehead torpedo 394
White Star Line, Admiralty agreement with 33
Whitthorne's Naval Reserve bill, provisions of 42
Whitworth armor-plates 380
Wiborg, torpedo boat, Russia 404
Boilers of 233
Widgeon, gun vessel, England 303
Willan's compound engine 200–203
Wilson's armor plates made in Russia 382

Page.
Wire, underwriters' 206
Wire-wound guns:
Russian 6-inch 355
Woolwich 9.2-inch 356
Failure of 358
Wiring, electric 205
Woodite 389
Woolwich 156-ton gun, proposed 354
Wyllie and Morrison's system of forced draft 238, 241

Y.

Yacht clubs:
Strength of personnel of, U. S 16
Percentage of crews, American 16

Page.
Yarrow:
Boiler 228
Forced draft experiments 242
Torpedo boats 399, 400
Yorktown:
U. S. cruiser 300
Boilers of 222
Electric plant of 207
Youth in high grades 50, 59

Z.

Zalinski dynamite gun 348
Zincking 276

19148—No. 7——28

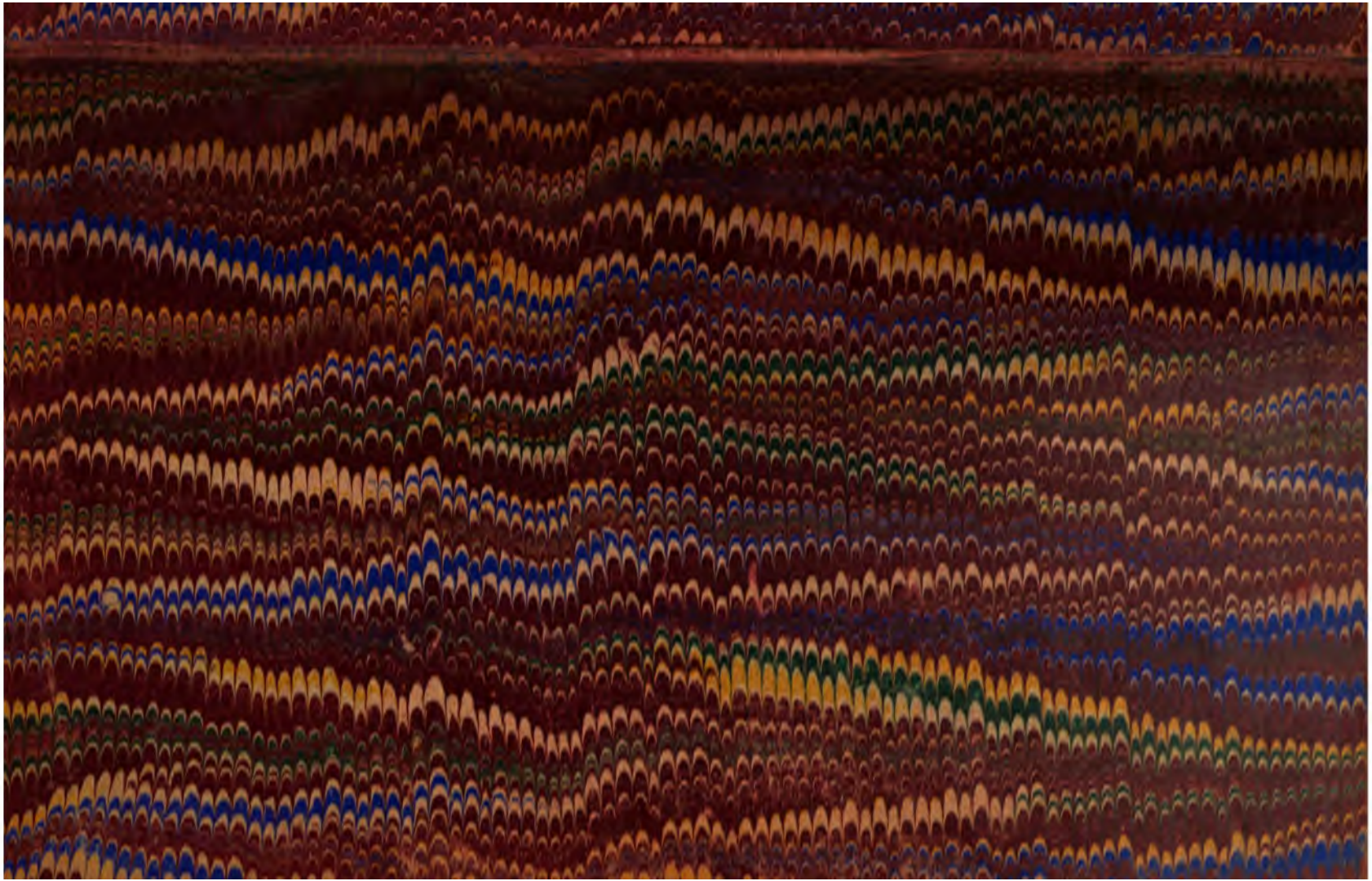

This book should be returned to the Library on or before the last date stamped below.

A fine of five cents a day is incurred by retaining it beyond the specified time.

Please return promptly.